Fig.1

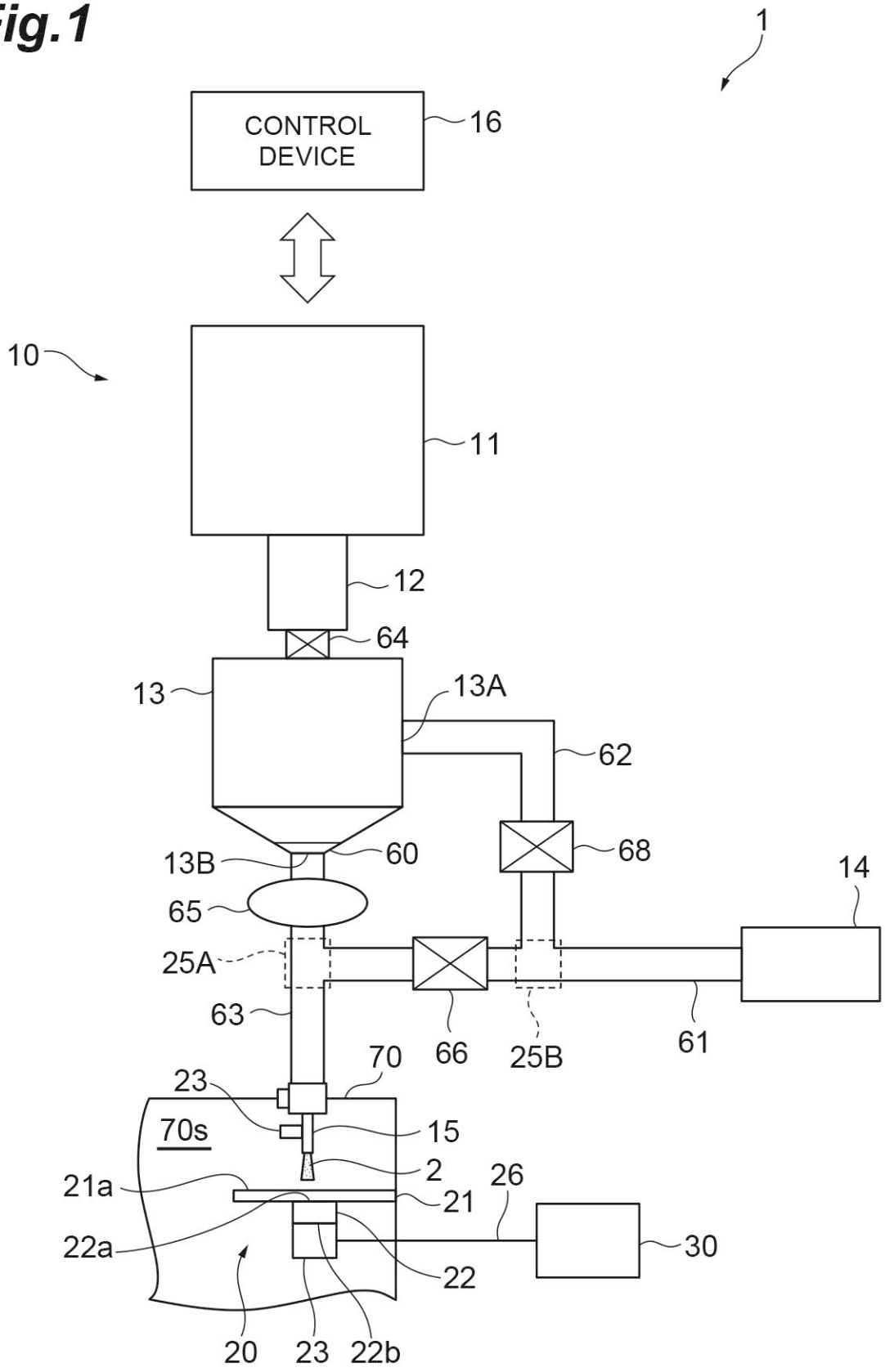
1
CONTROL DEVICE
16
10
11
12
64
13
13A
62
13B
60
68
14
65
25A
63
66
25B
61
70
23
70s
15
2
21a
21
26
22a
30
22
20
23
22b

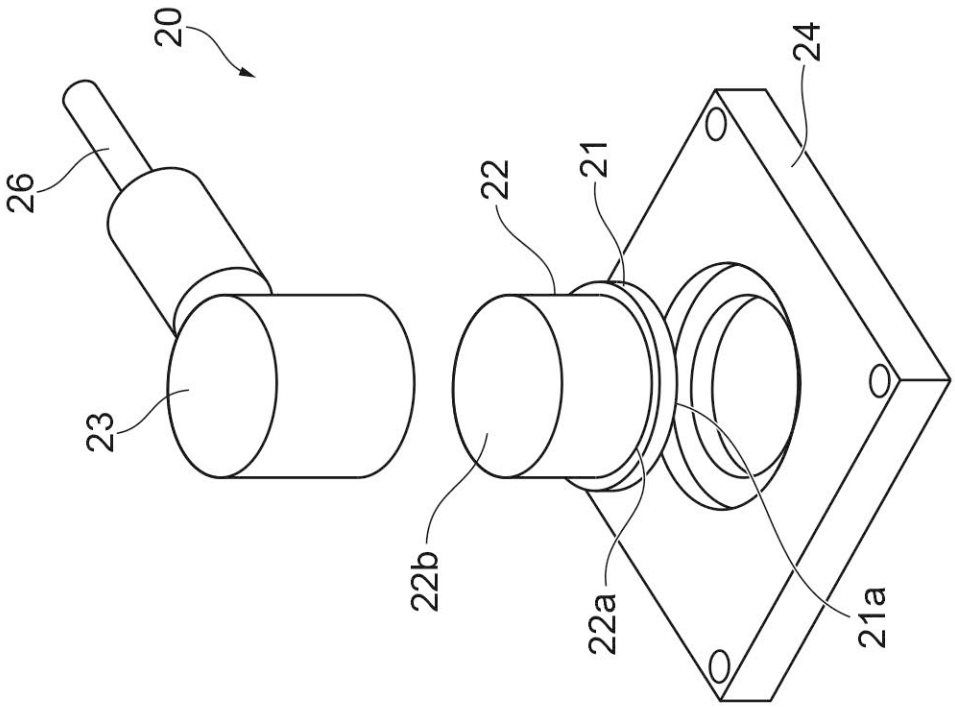

Fig.2B

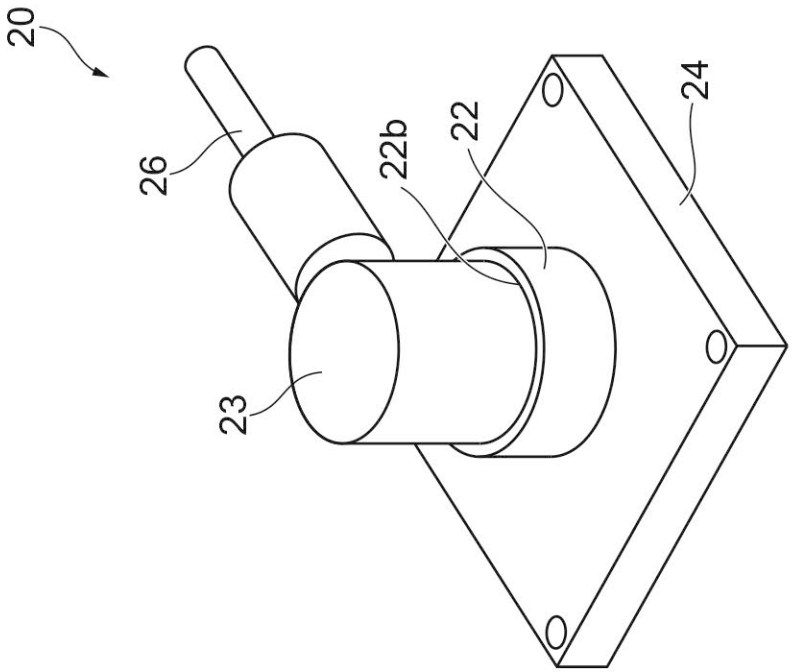

Fig.2A

Fig.3

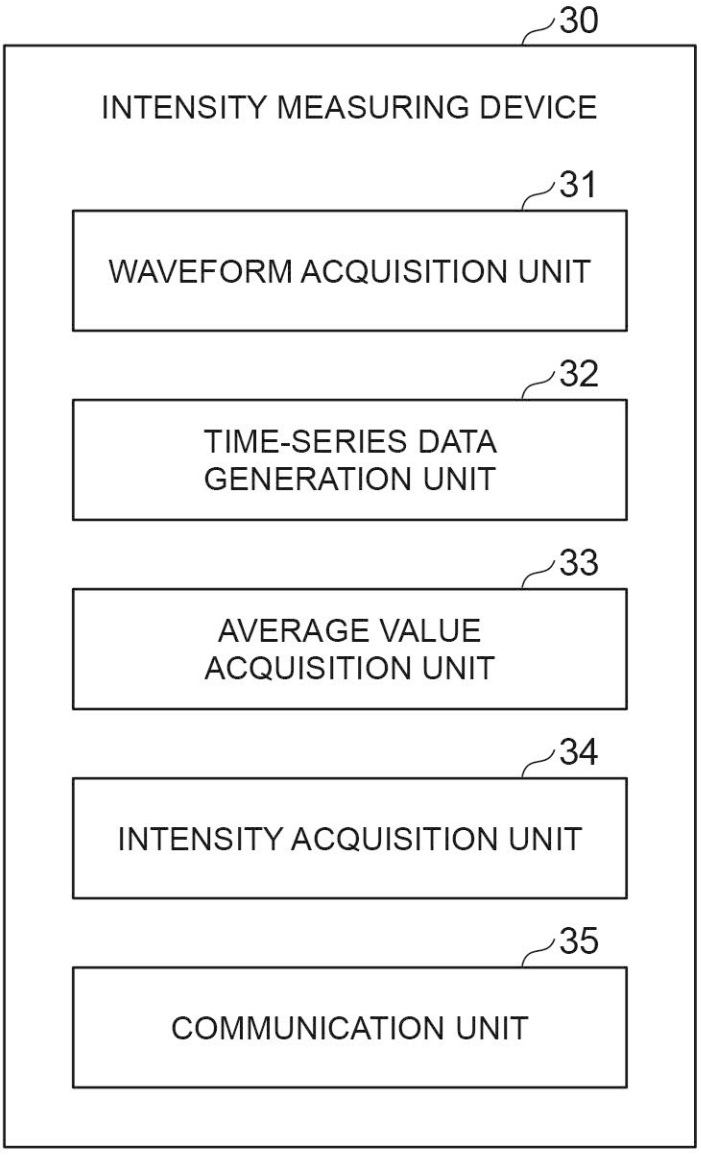
30
INTENSITY MEASURING DEVICE
31
WAVEFORM ACQUISITION UNIT
32
TIME-SERIES DATA GENERATION UNIT
33
AVERAGE VALUE ACQUISITION UNIT
34
INTENSITY ACQUISITION UNIT
35
COMMUNICATION UNIT

Fig.4

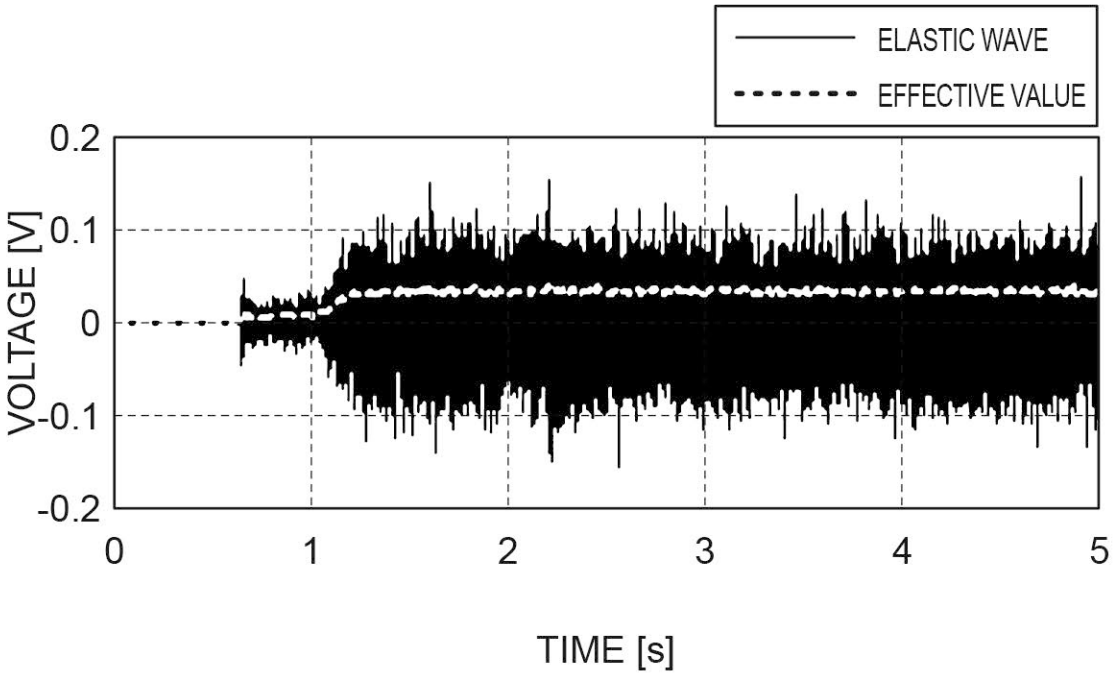
ELASTIC WAVE
EFFECTIVE VALUE
VOLTAGE [V]
0.2
0.1
0
-0.1
-0.2
0
1
2
3
4
5
TIME [s]

Fig.5

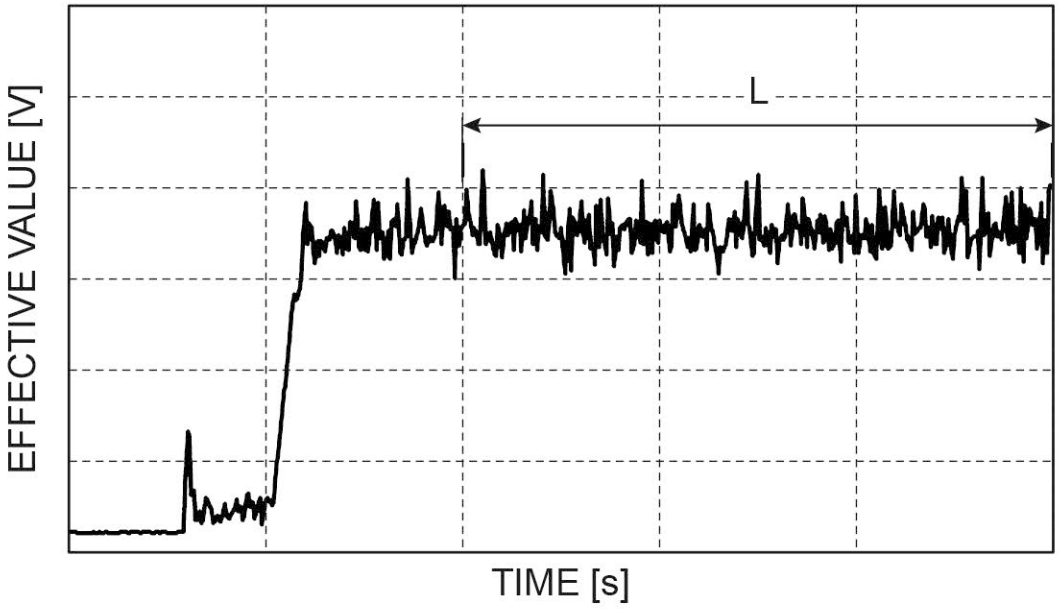

Fig.6

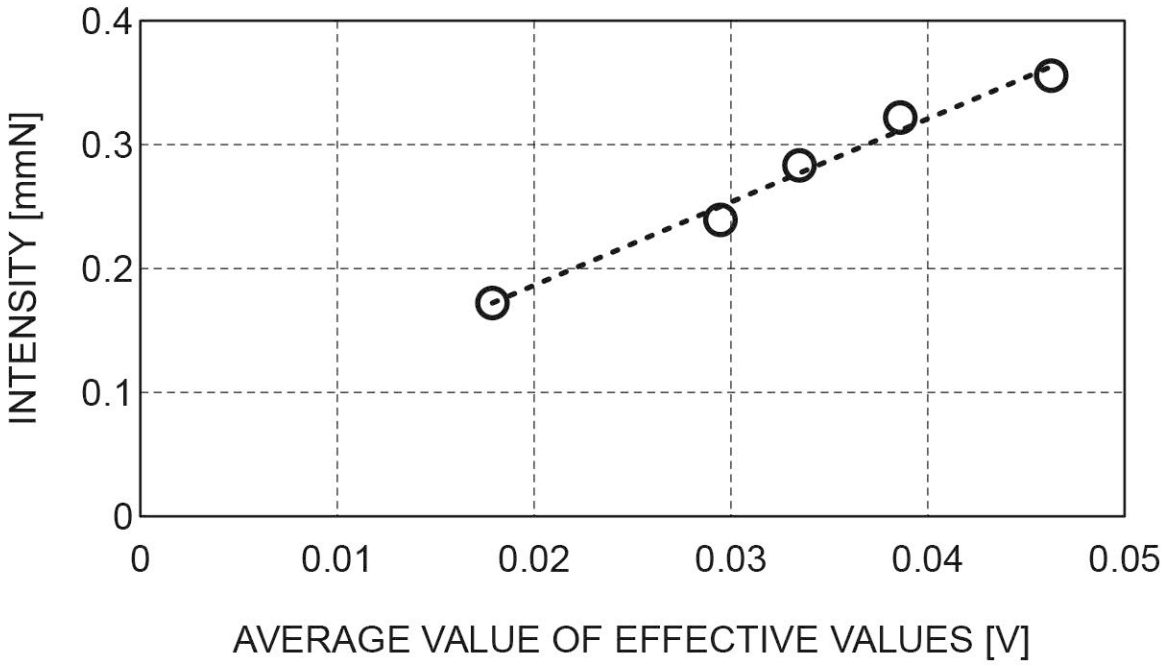
0.4
0.3
0.2
0.1
0
INTENSITY [mmN]
0
0.01
0.02
0.03
0.04
0.05
AVERAGE VALUE OF EFFECTIVE VALUES [V]

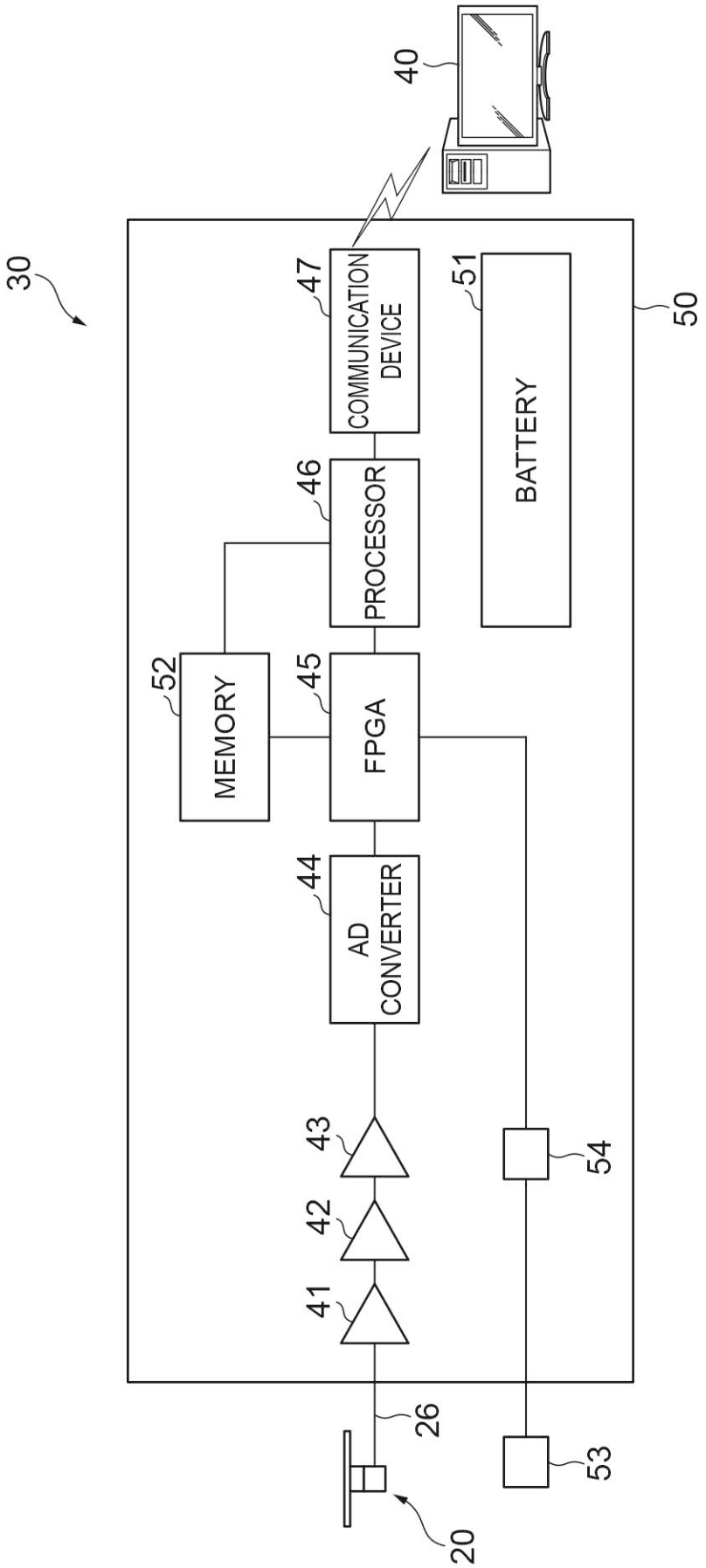
40
30
47
COMMUNICATION DEVICE
51
BATTERY
50
46
PROCESSOR
52
MEMORY
45
FPGA
44
AD CONVERTER
43
42
41
54
26
53
20

Fig.7

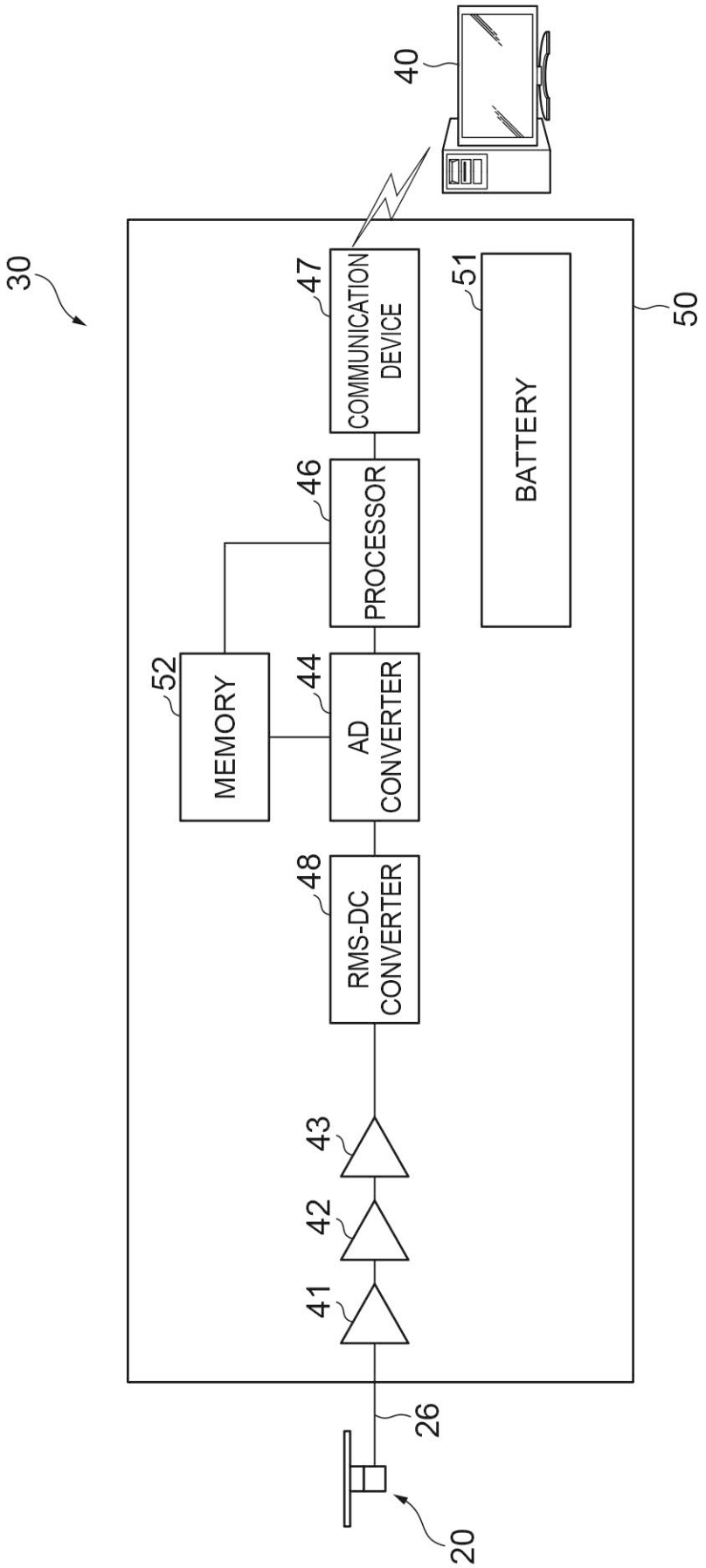
40
30
47
COMMUNICATION DEVICE
51
BATTERY
50
46
PROCESSOR
52
MEMORY
44
AD CONVERTER
48
RMS-DC CONVERTER
43
42
41
26
20

Fig.8

Fig.9

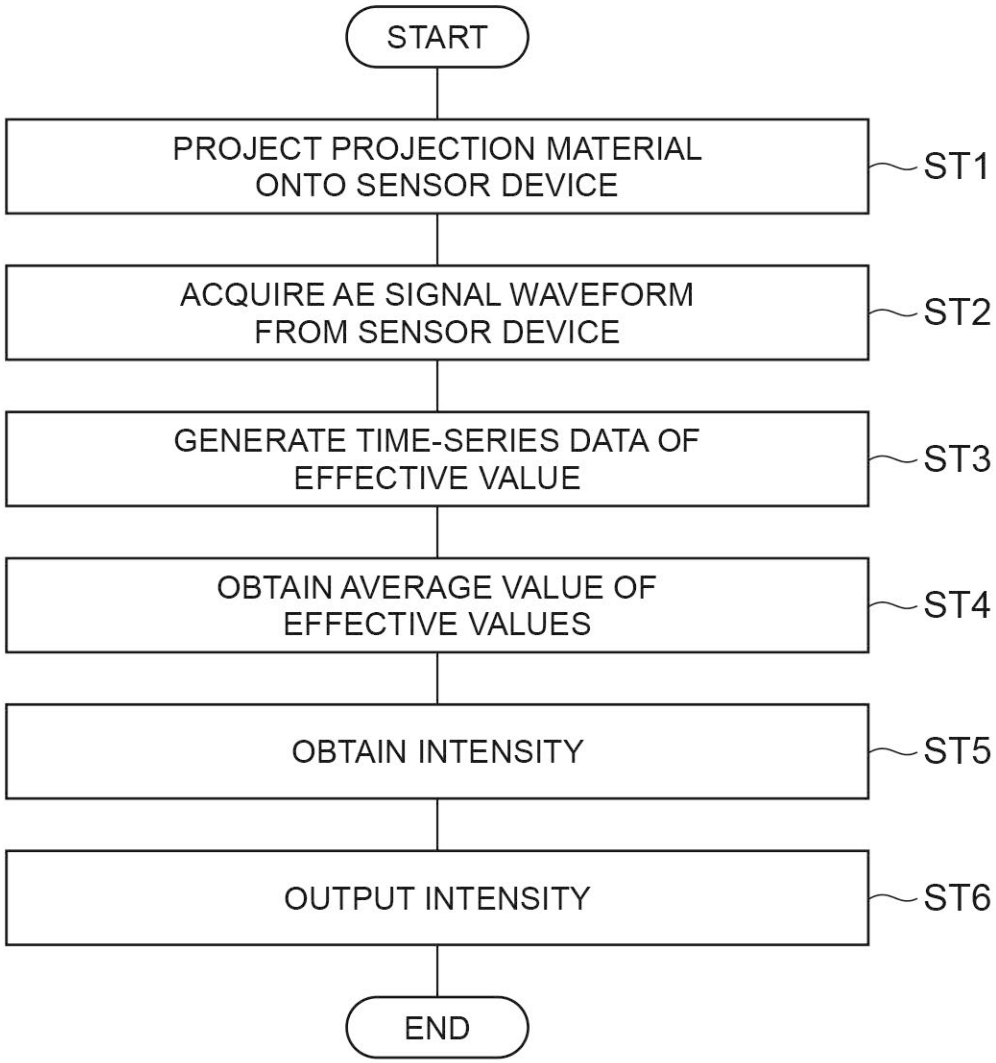
START
PROJECT PROJECTION MATERIAL ONTO SENSOR DEVICE
ST1
ACQUIRE AE SIGNAL WAVEFORM FROM SENSOR DEVICE
ST2
GENERATE TIME-SERIES DATA OF EFFECTIVE VALUE
ST3
OBTAIN AVERAGE VALUE OF EFFECTIVE VALUES
ST4
OBTAIN INTENSITY
ST5
OUTPUT INTENSITY
ST6
END