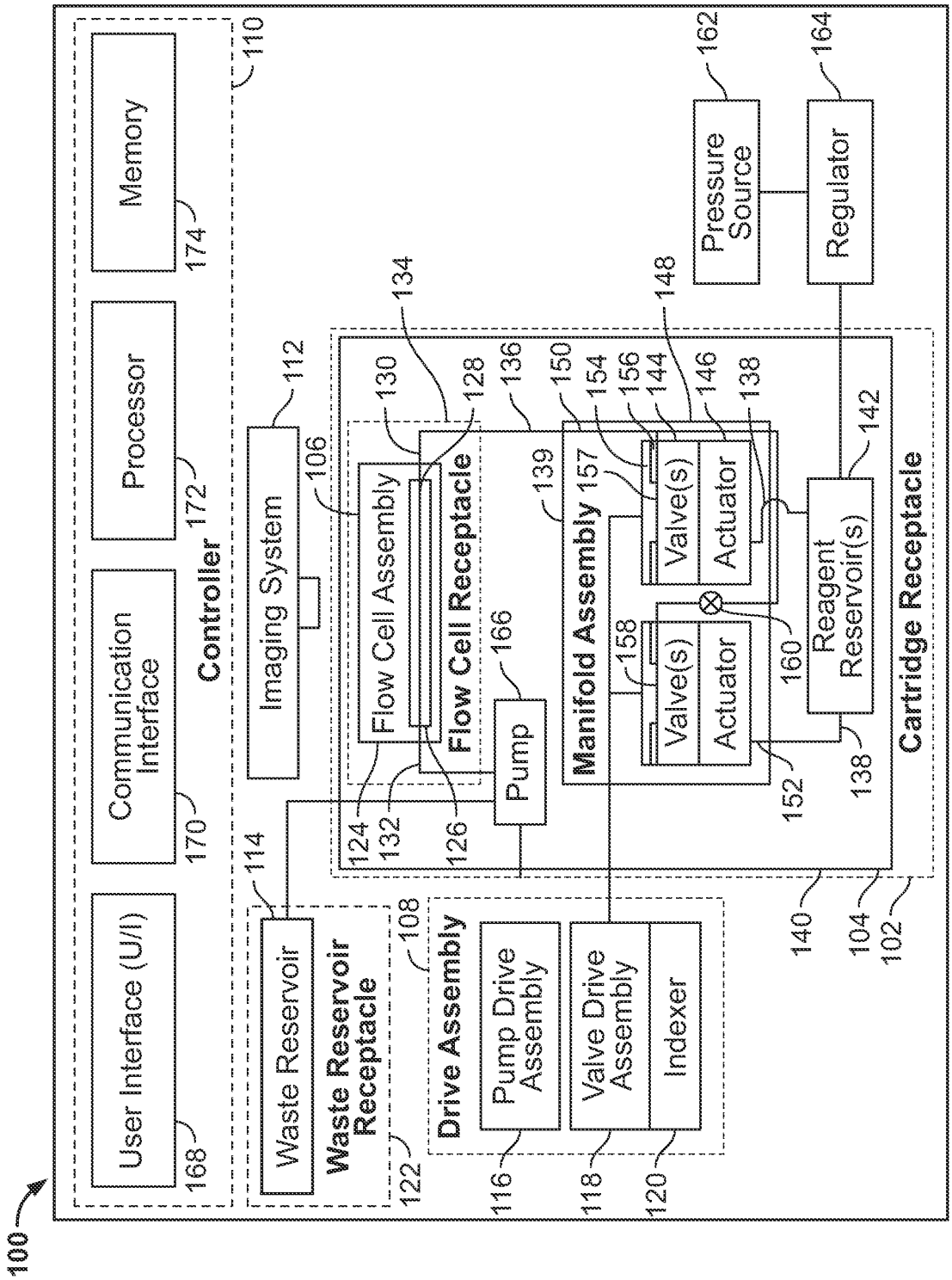
100
User Interface (U/I)
168
Communication Interface
170
Processor
172
Memory
174
Controller
110
Imaging System
112
106
Waste Reservoir
114
Waste Reservoir Receptacle
122
108
Drive Assembly
Pump Drive Assembly
116
Valve Drive Assembly
118
Indexer
120
Flow Cell Assembly
130
Flow Cell Receptacle
128
134
124
132
126
Pump
166
136
139
Manifold Assembly
157
150
154
156
144
148
Valve(s)
Actuator
146
138
158
160
152
Reagent Reservoir(s)
142
138
Cartridge Receptacle
140
104
102
Pressure Source
162
Regulator
164

FIG. 1A

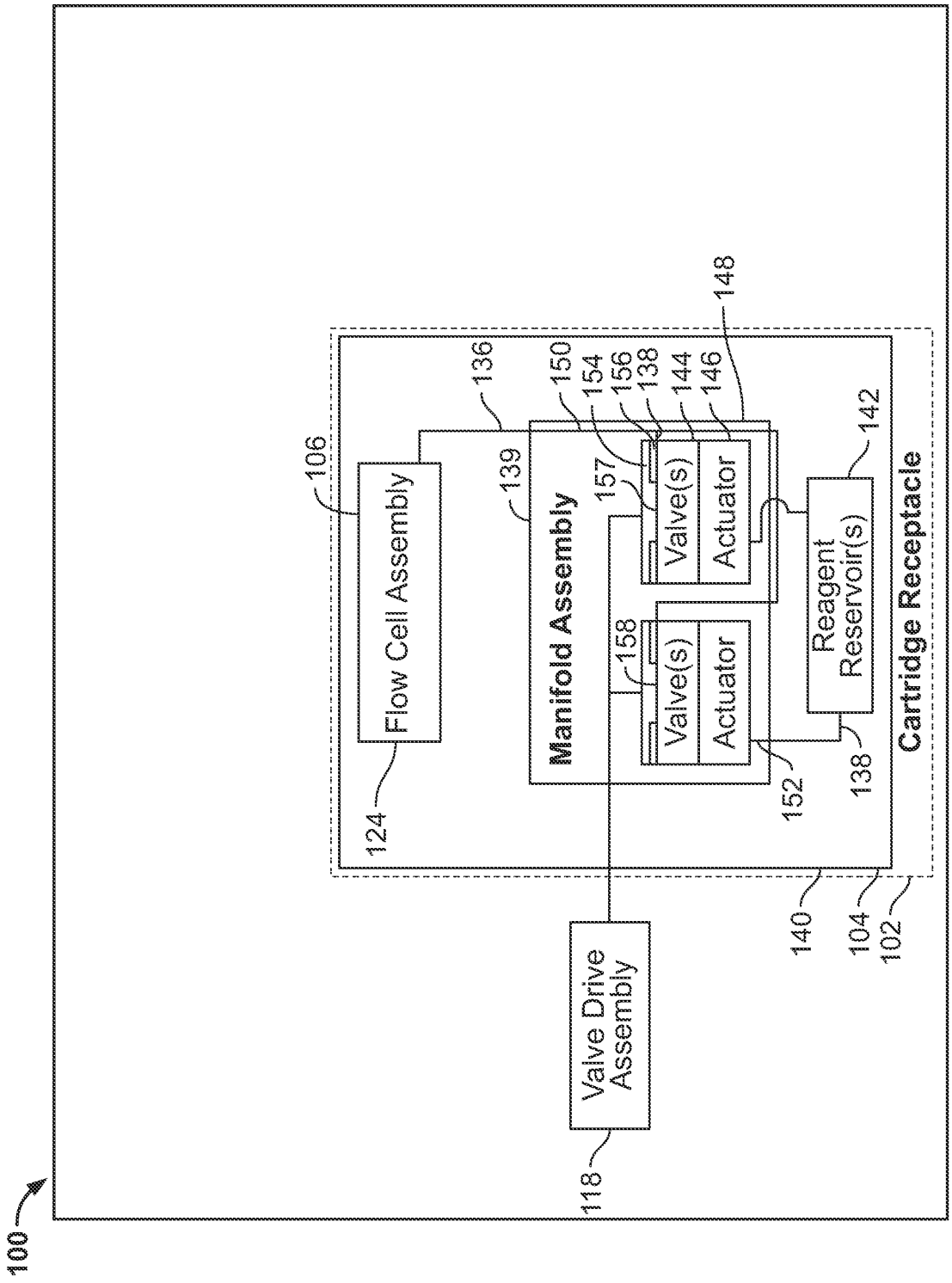
100
118
Valve Drive Assembly
140
104
102
Cartridge Receptacle
106
Flow Cell Assembly
124
136
139
Manifold Assembly
150
154
156
138
144
146
148
157
158
Valve(s)
Actuator
Valve(s)
Actuator
152
142
Reagent Reservoir(s)
138

FIG. 1B

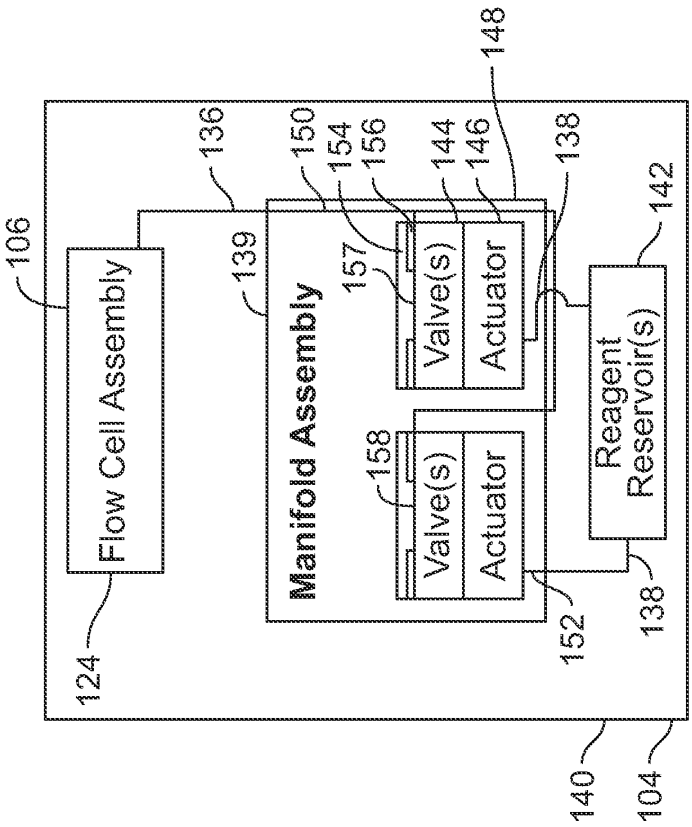
106
Flow Cell Assembly
124
136
139
Manifold Assembly
150
154
156
157
158
144
146
148
Valve(s)
Actuator
Valve(s)
Actuator
138
152
142
Reagent Reservoir(s)
138
140
104

FIG. 1C

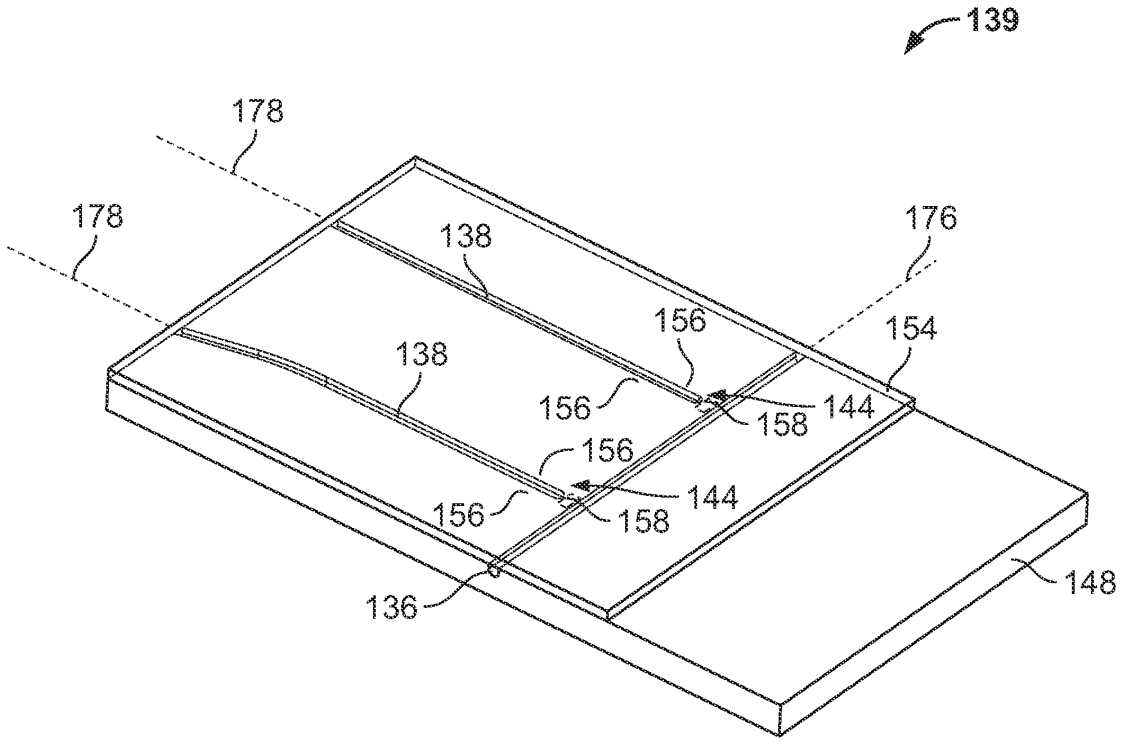
139
178
178
176
138
138
156
154
156
144
158
156
156
144
158
136
148

FIG. 2

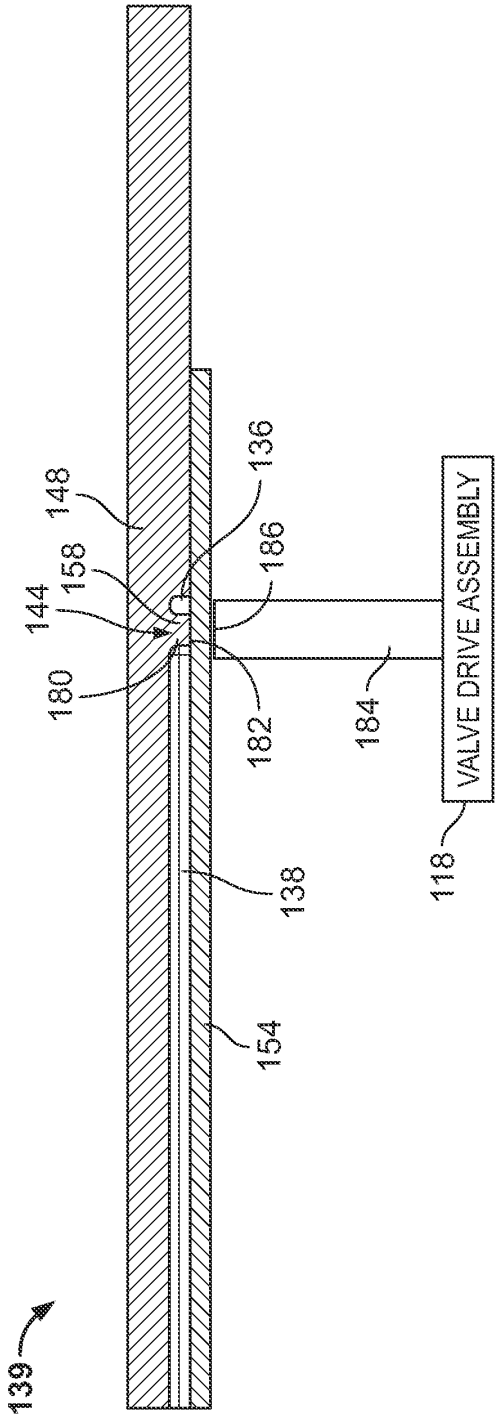
139
148
158
144
180
136
186
182
184
VALVE DRIVE ASSEMBLY
118
138
154

FIG. 3

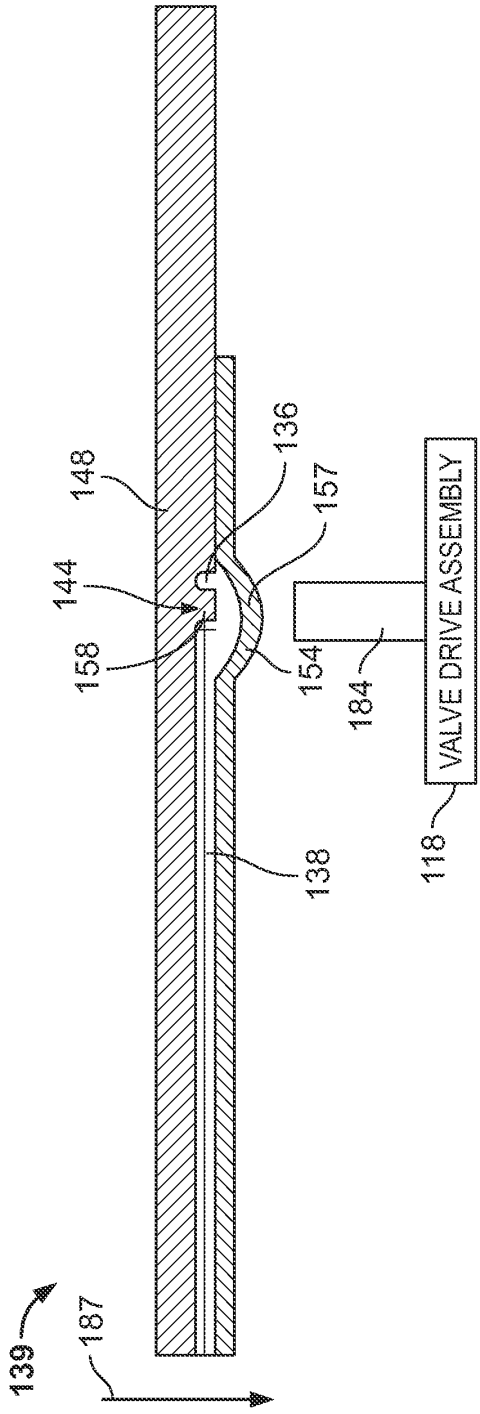
139
187
148
144
158
136
157
154
184
VALVE DRIVE ASSEMBLY
118
138

FIG. 4

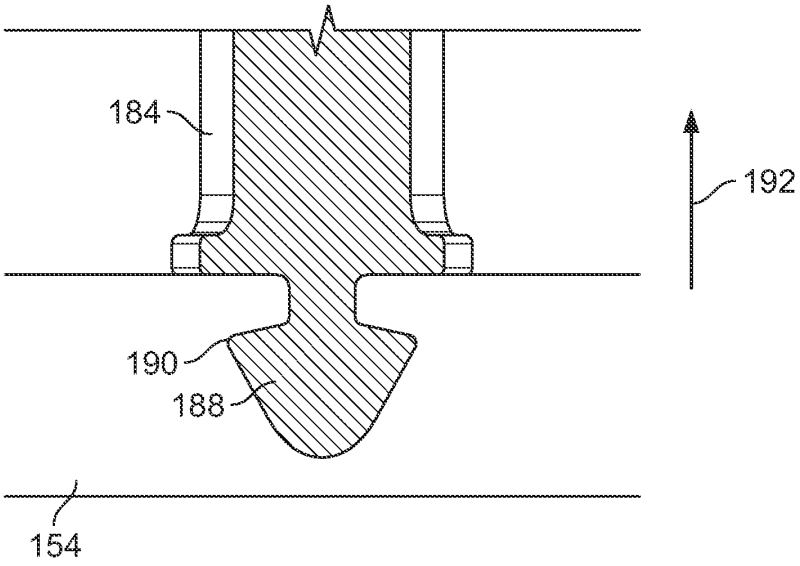

FIG. 5

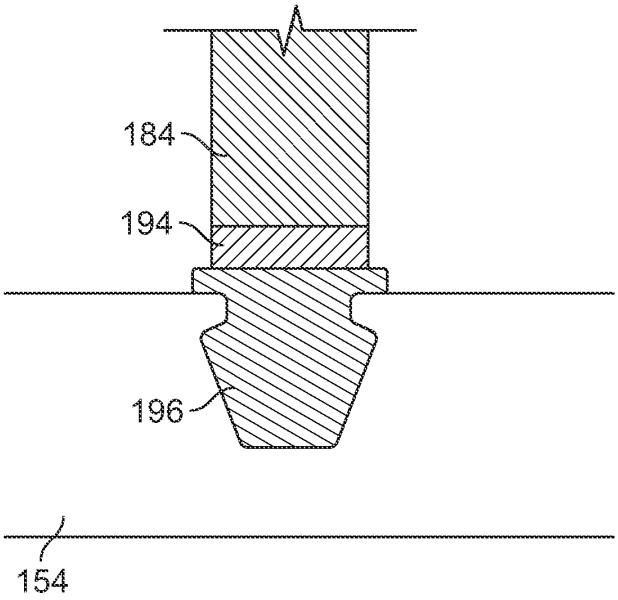

FIG. 6

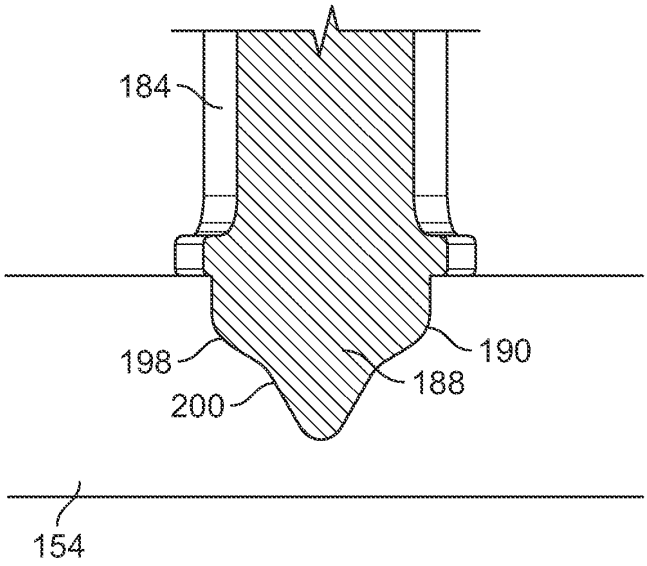
184
198
200
188
190
154

FIG. 7

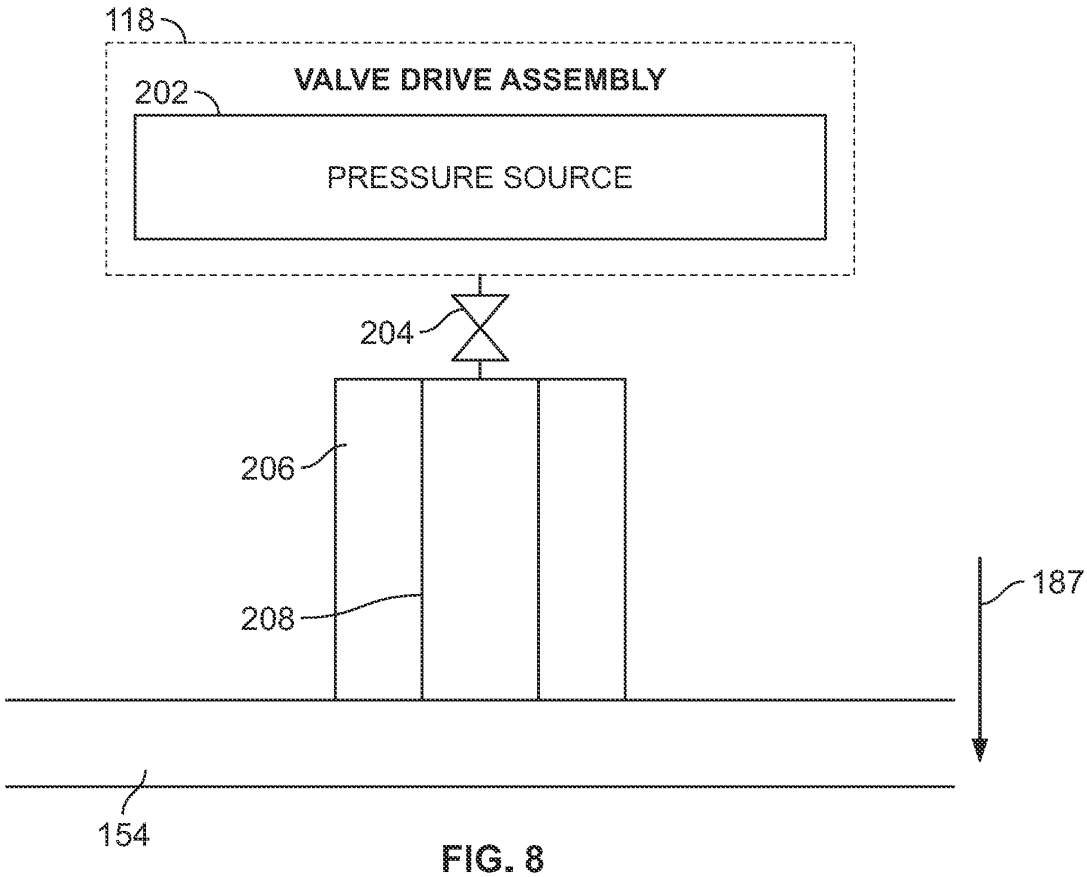
118
VALVE DRIVE ASSEMBLY
202
PRESSURE SOURCE
204
206
208
187
154

FIG. 8

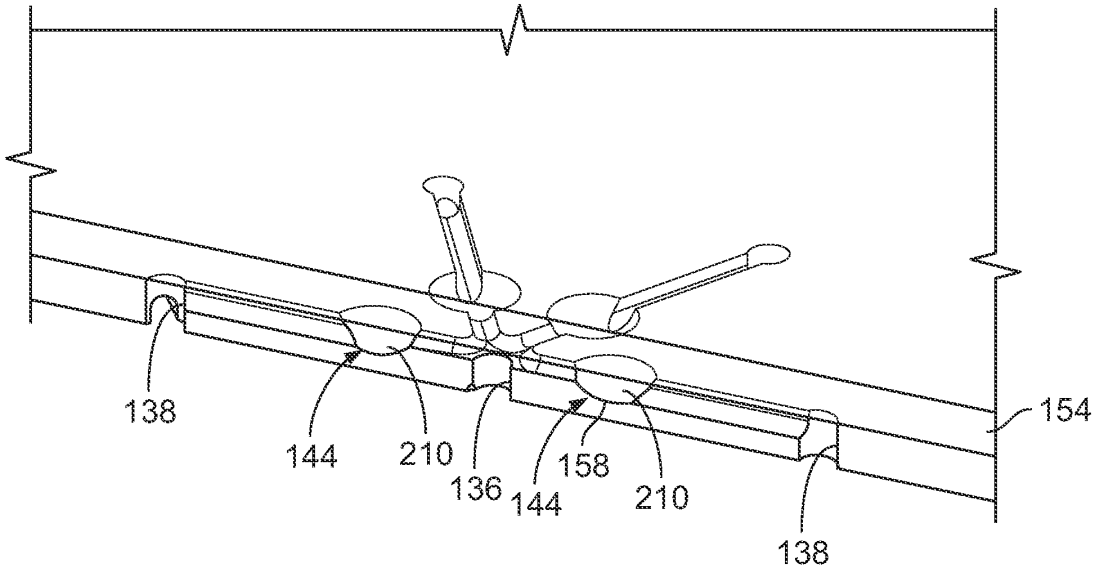

FIG. 9

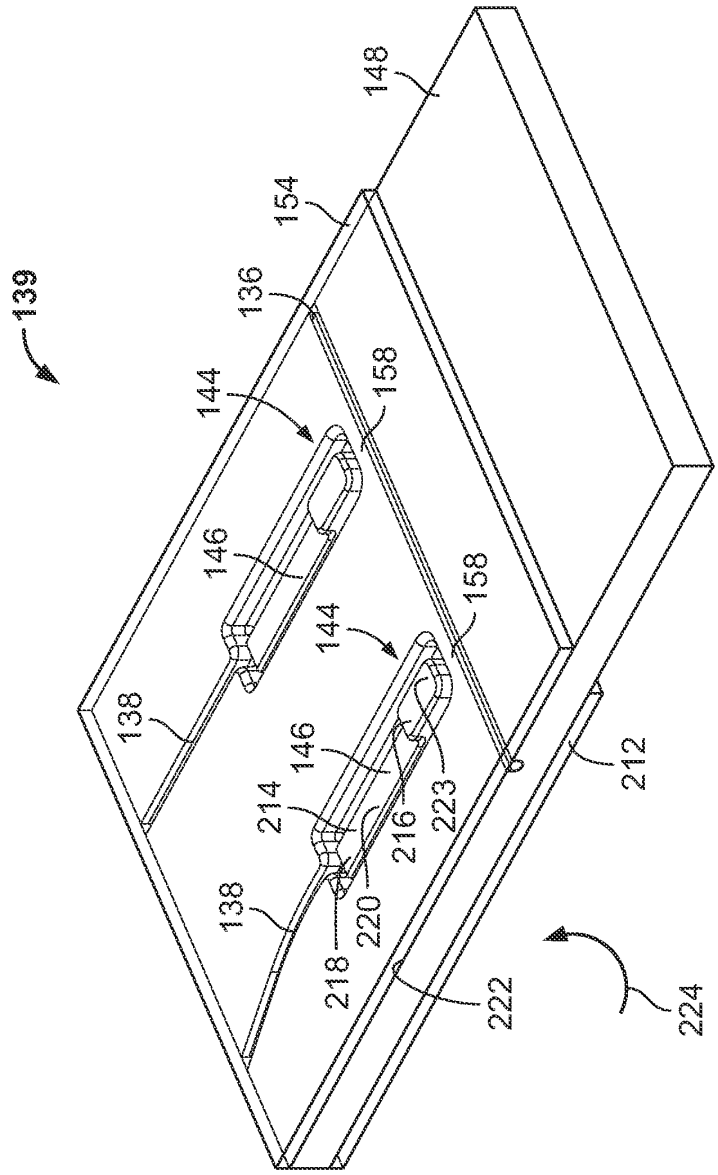
139
148
154
136
144
158
146
158
144
138
146
214
216
223
212
138
220
218
222
224

FIG. 10

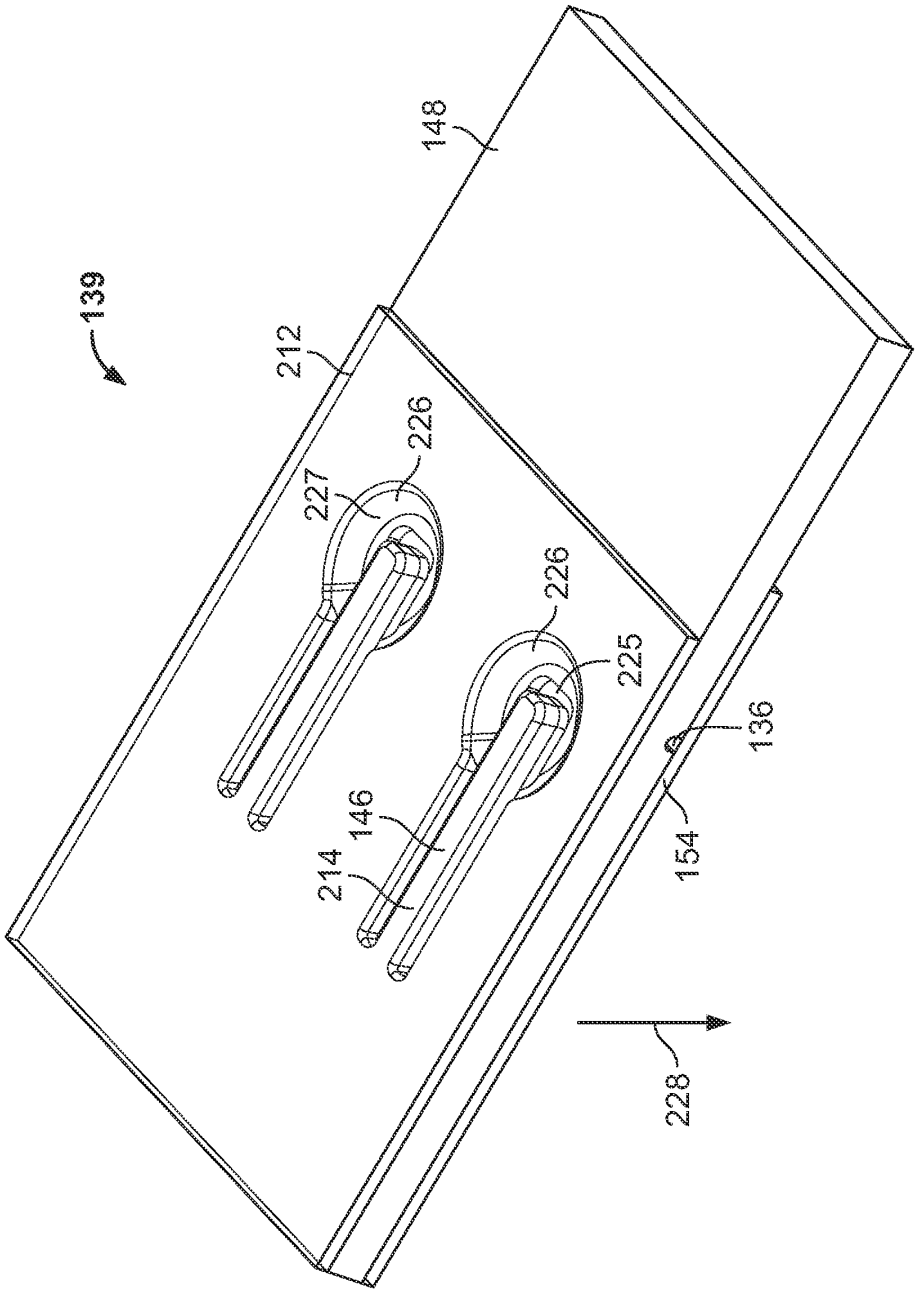

FIG. 11

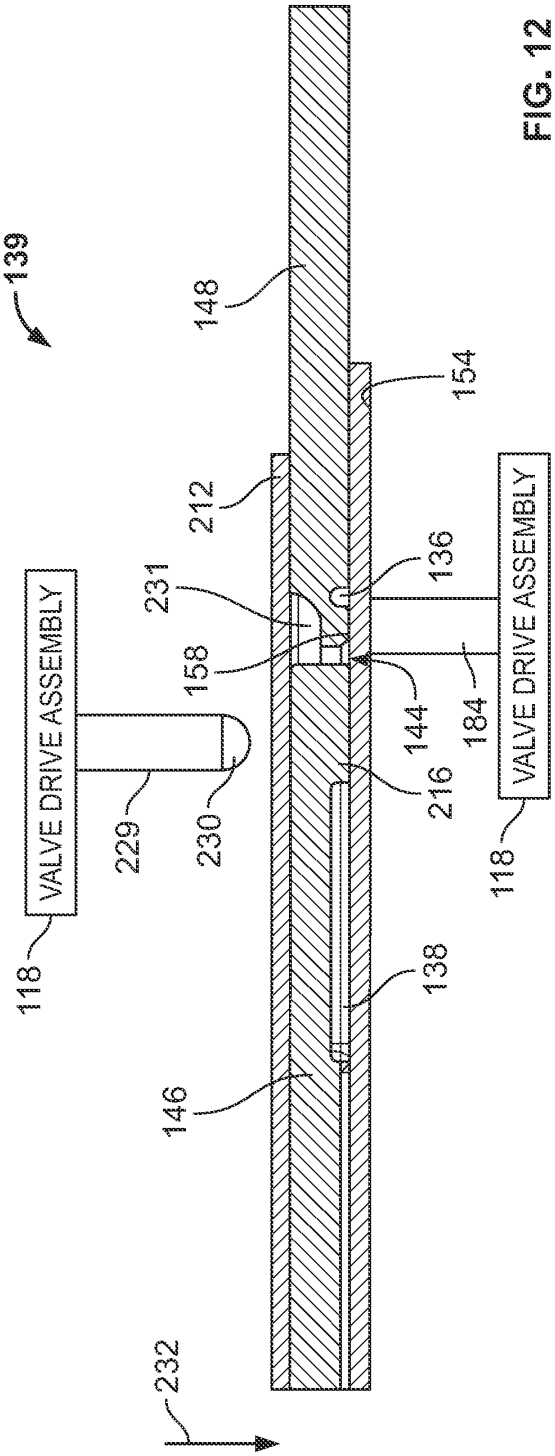
139
148
154
212
231
136
158
144
184
VALVE DRIVE ASSEMBLY
VALVE DRIVE ASSEMBLY
229
230
216
118
118
138
146
232

FIG. 12

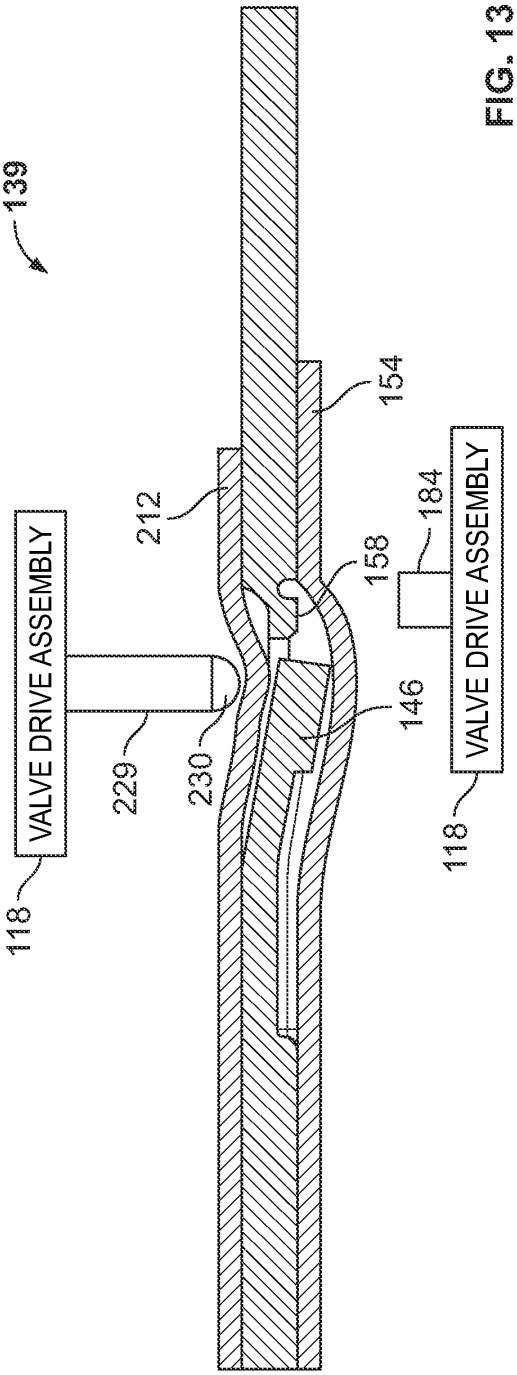
139
154
212
158
184
VALVE DRIVE ASSEMBLY
VALVE DRIVE ASSEMBLY
229
230
146
118
118

FIG. 13

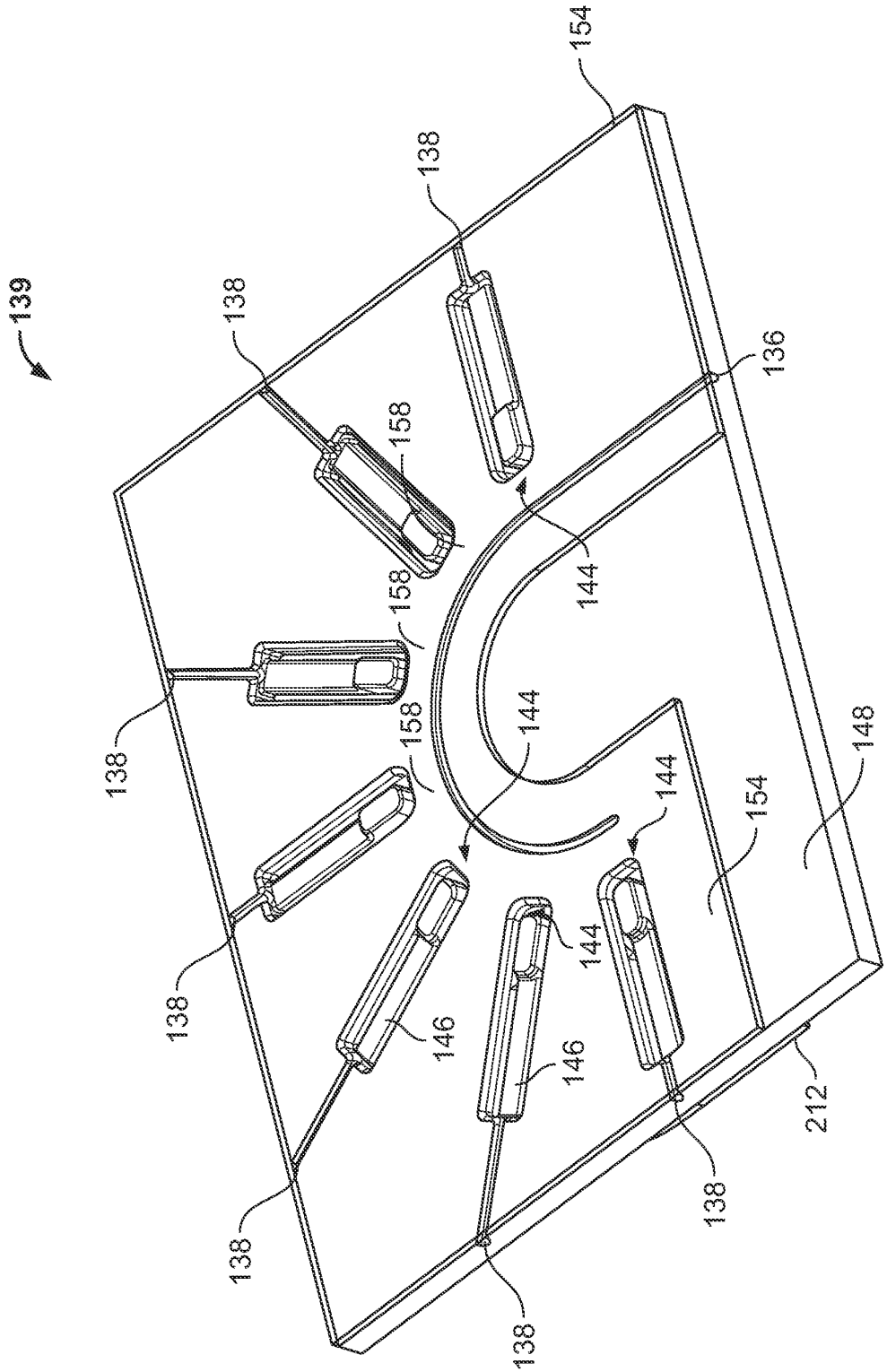
139
154
138
138
136
158
158
144
138
158
144
144
154
148
138
144
146
146
212
138
138
138

FIG. 14

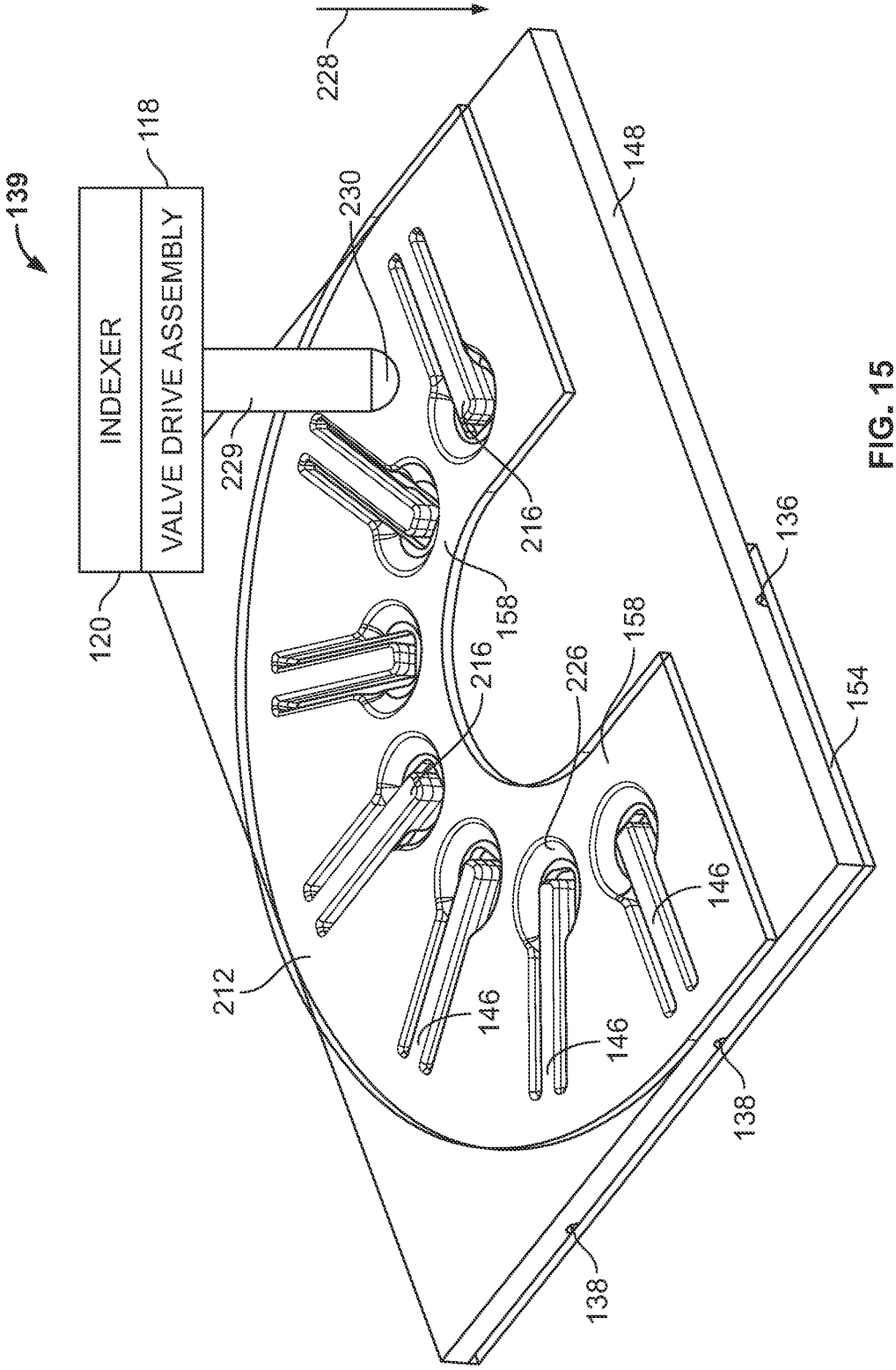
139
INDEXER
VALVE DRIVE ASSEMBLY
118
120
228
230
229
148
216
158
136
226
154
212
146
138

FIG. 15

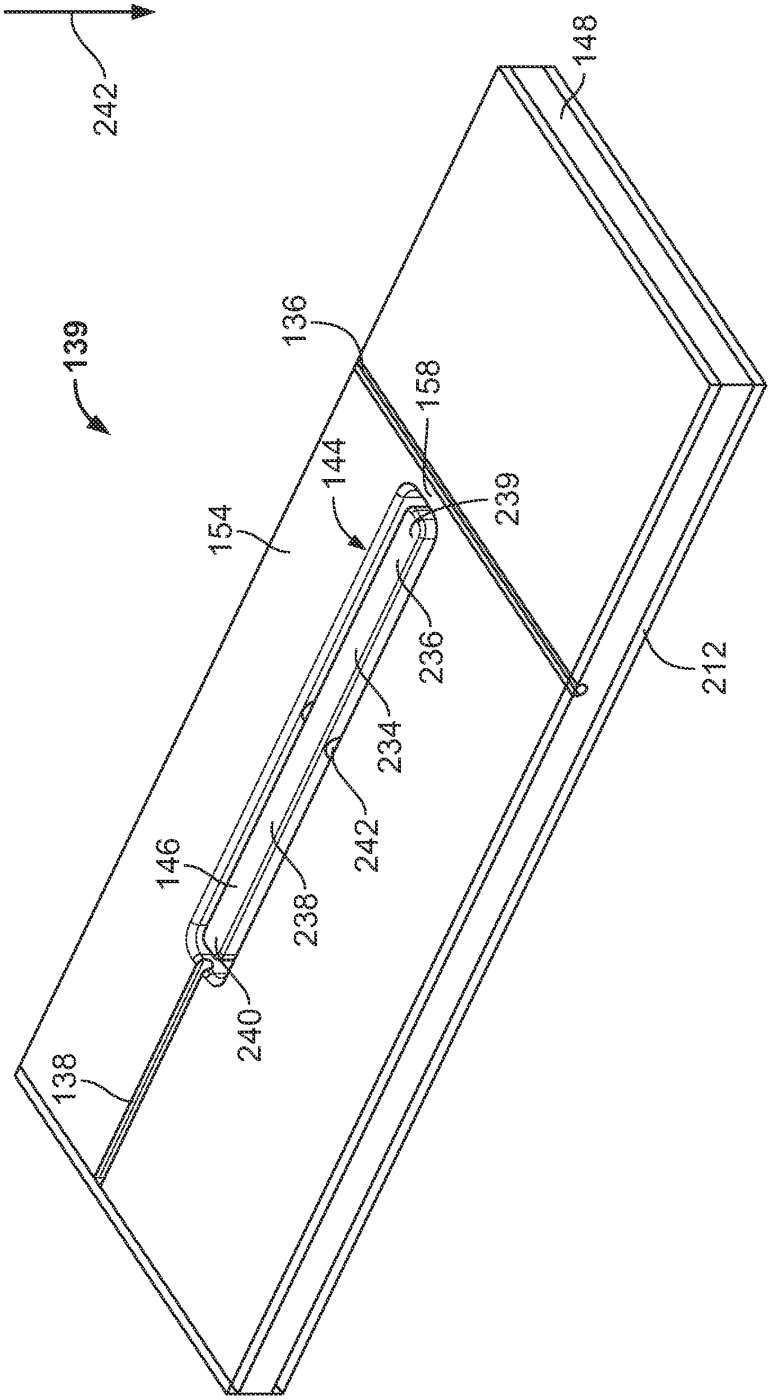

FIG. 16

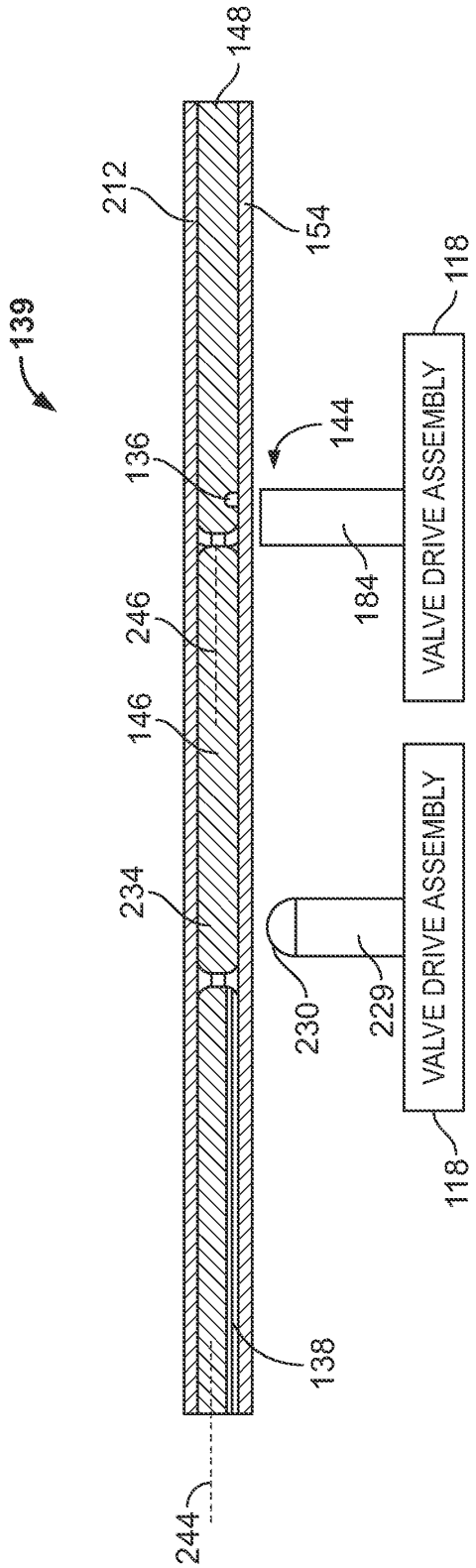
139
148
212
154
118
144
136
246
184
VALVE DRIVE ASSEMBLY
146
234
230
229
VALVE DRIVE ASSEMBLY
118
138
244

FIG. 17

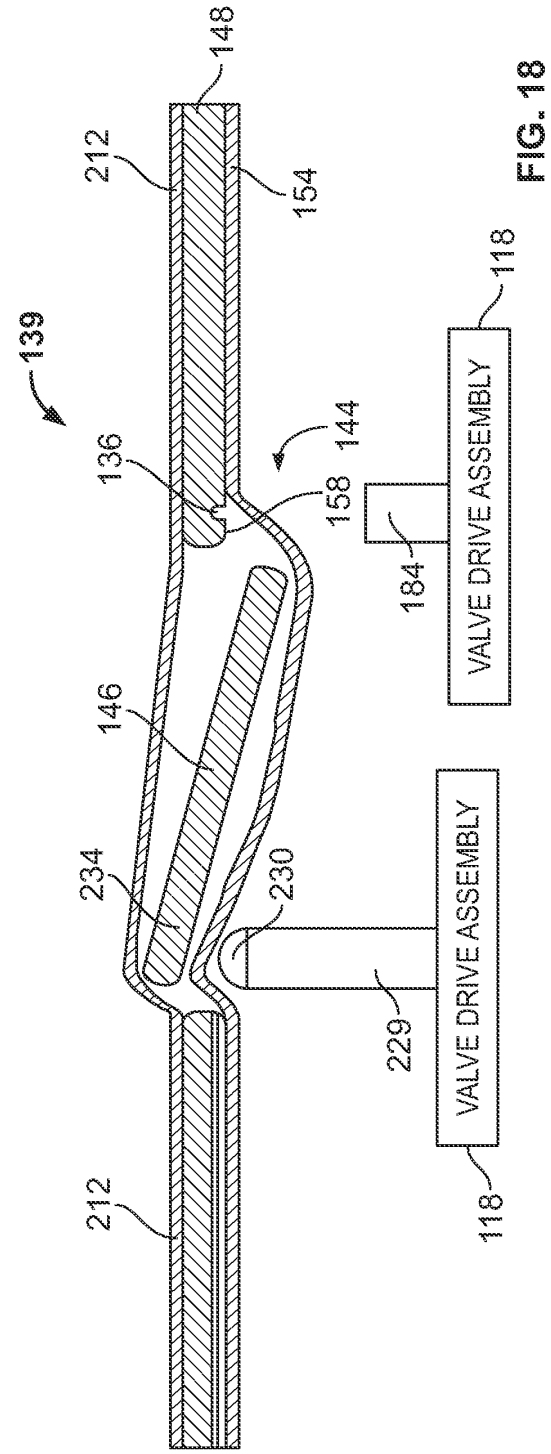
139
148
212
154
118
144
136
158
184
VALVE DRIVE ASSEMBLY
146
234
230
229
VALVE DRIVE ASSEMBLY
212
118

FIG. 18

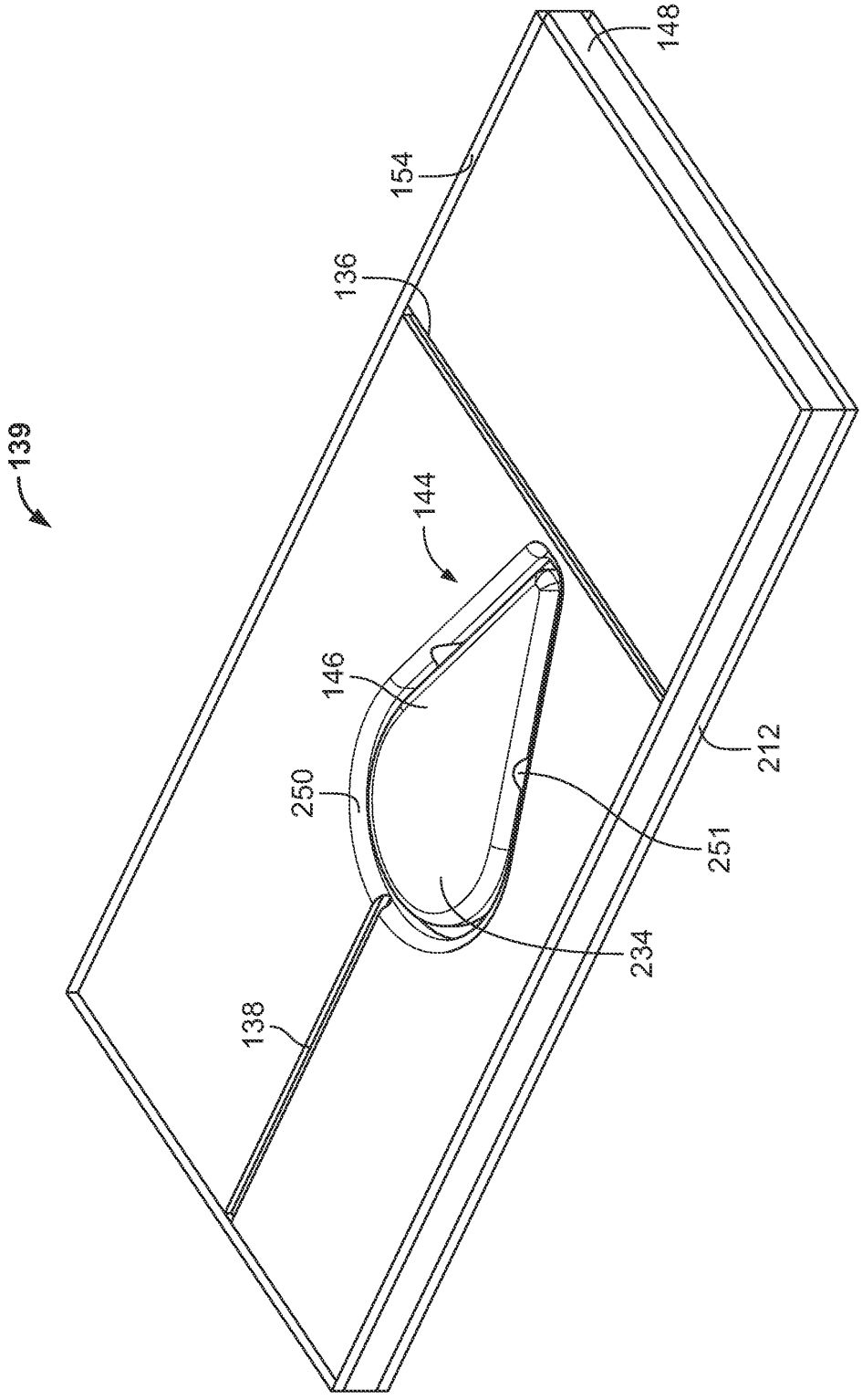

FIG. 19

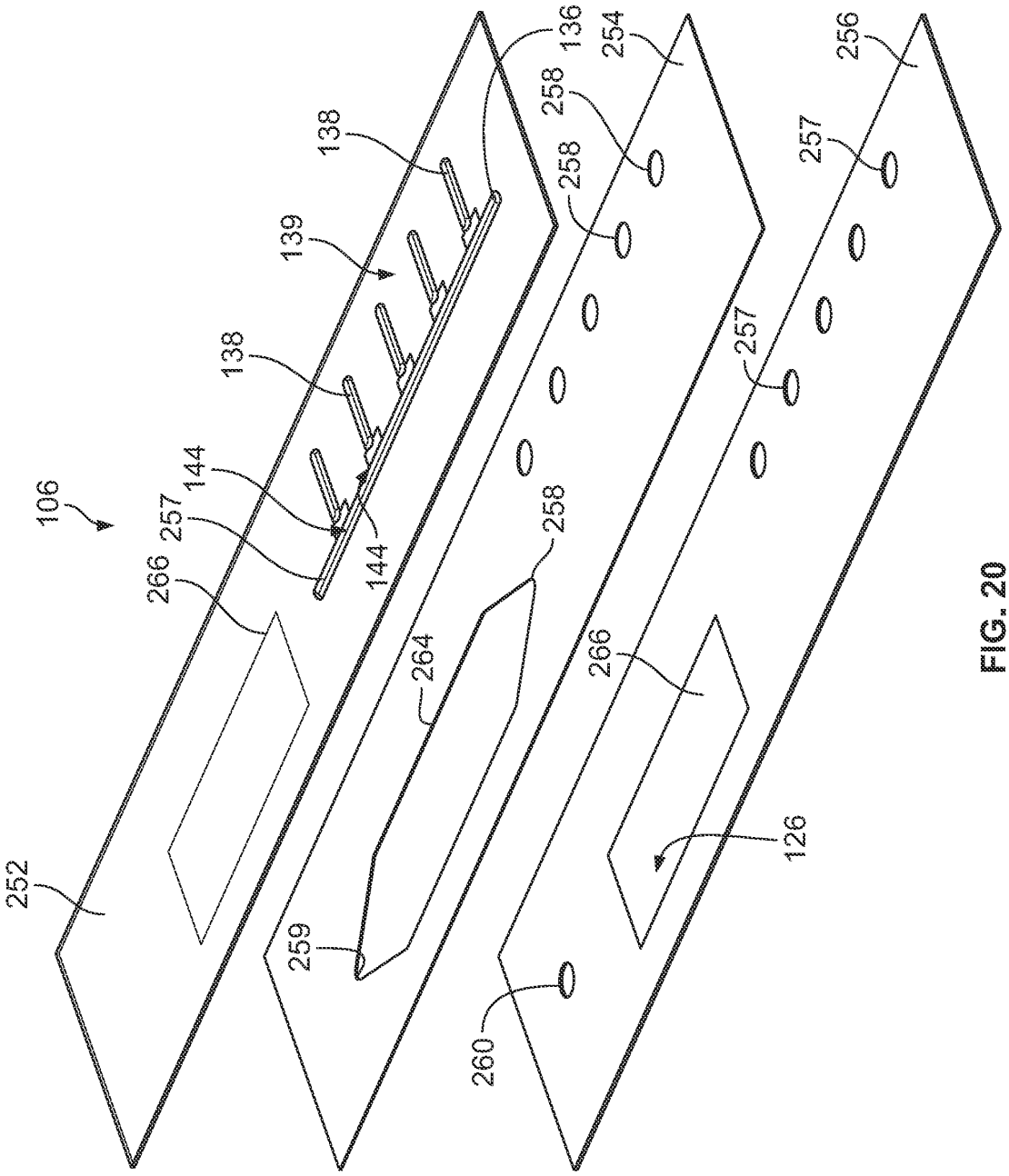
106
252
266
257
144
144
138
139
138
136
254
258
258
258
264
259
256
257
257
266
126
260

FIG. 20

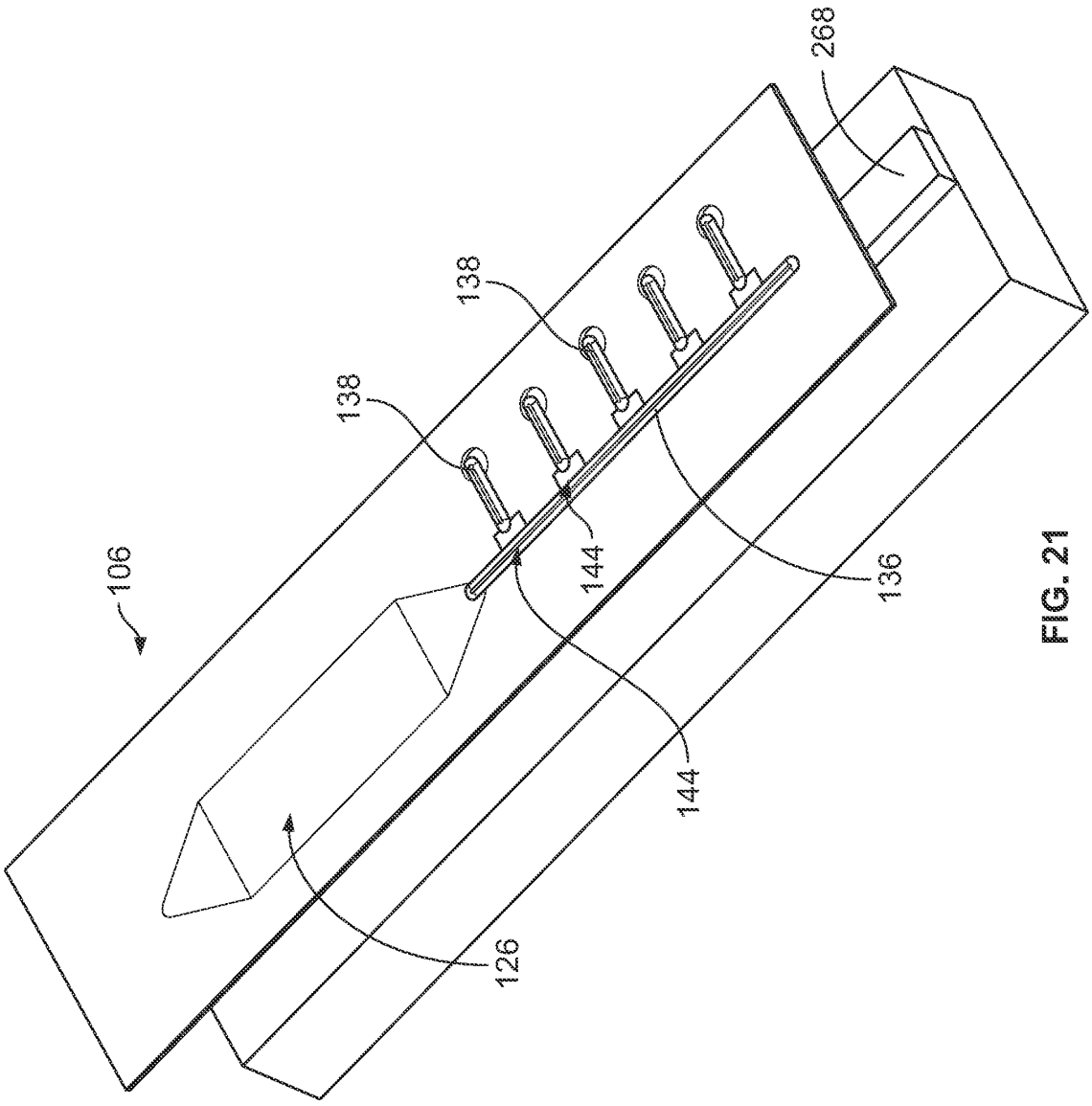

FIG. 21

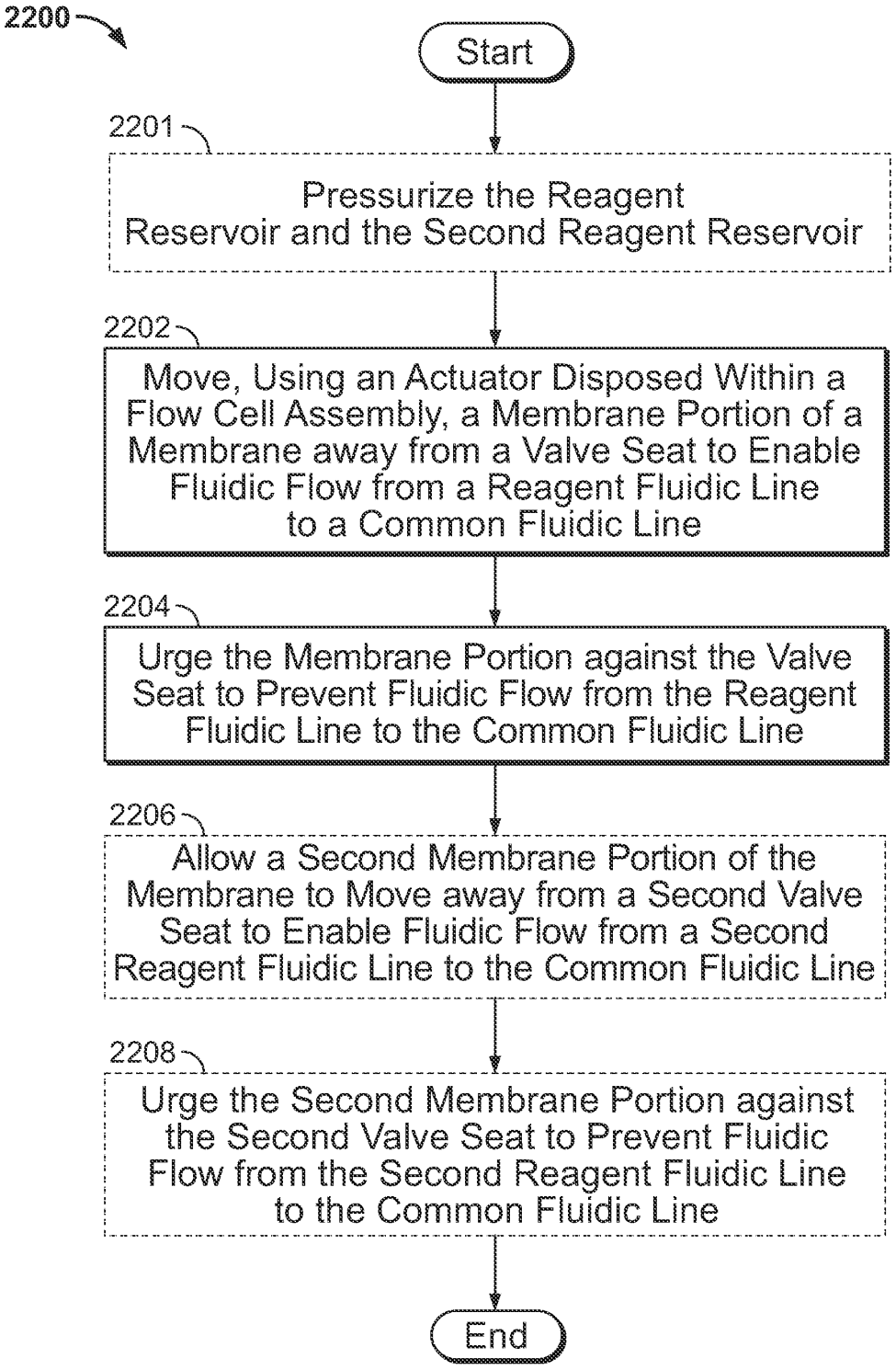
2200
Start
2201
Pressurize the Reagent Reservoir and the Second Reagent Reservoir
2202
Move, Using an Actuator Disposed Within a Flow Cell Assembly, a Membrane Portion of a Membrane away from a Valve Seat to Enable Fluidic Flow from a Reagent Fluidic Line to a Common Fluidic Line
2204
Urge the Membrane Portion against the Valve Seat to Prevent Fluidic Flow from the Reagent Fluidic Line to the Common Fluidic Line
2206
Allow a Second Membrane Portion of the Membrane to Move away from a Second Valve Seat to Enable Fluidic Flow from a Second Reagent Fluidic Line to the Common Fluidic Line
2208
Urge the Second Membrane Portion against the Second Valve Seat to Prevent Fluidic Flow from the Second Reagent Fluidic Line to the Common Fluidic Line
End

FIG. 22

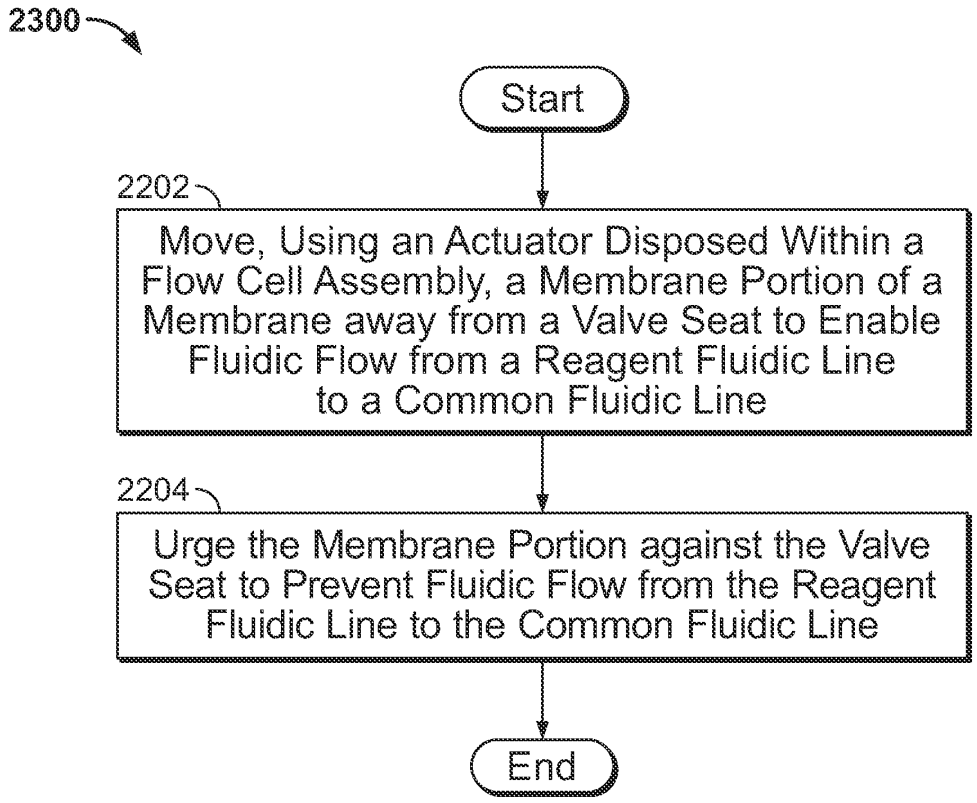
2300
Start
2202
Move, Using an Actuator Disposed Within a Flow Cell Assembly, a Membrane Portion of a Membrane away from a Valve Seat to Enable Fluidic Flow from a Reagent Fluidic Line to a Common Fluidic Line
2204
Urge the Membrane Portion against the Valve Seat to Prevent Fluidic Flow from the Reagent Fluidic Line to the Common Fluidic Line
End

FIG. 23