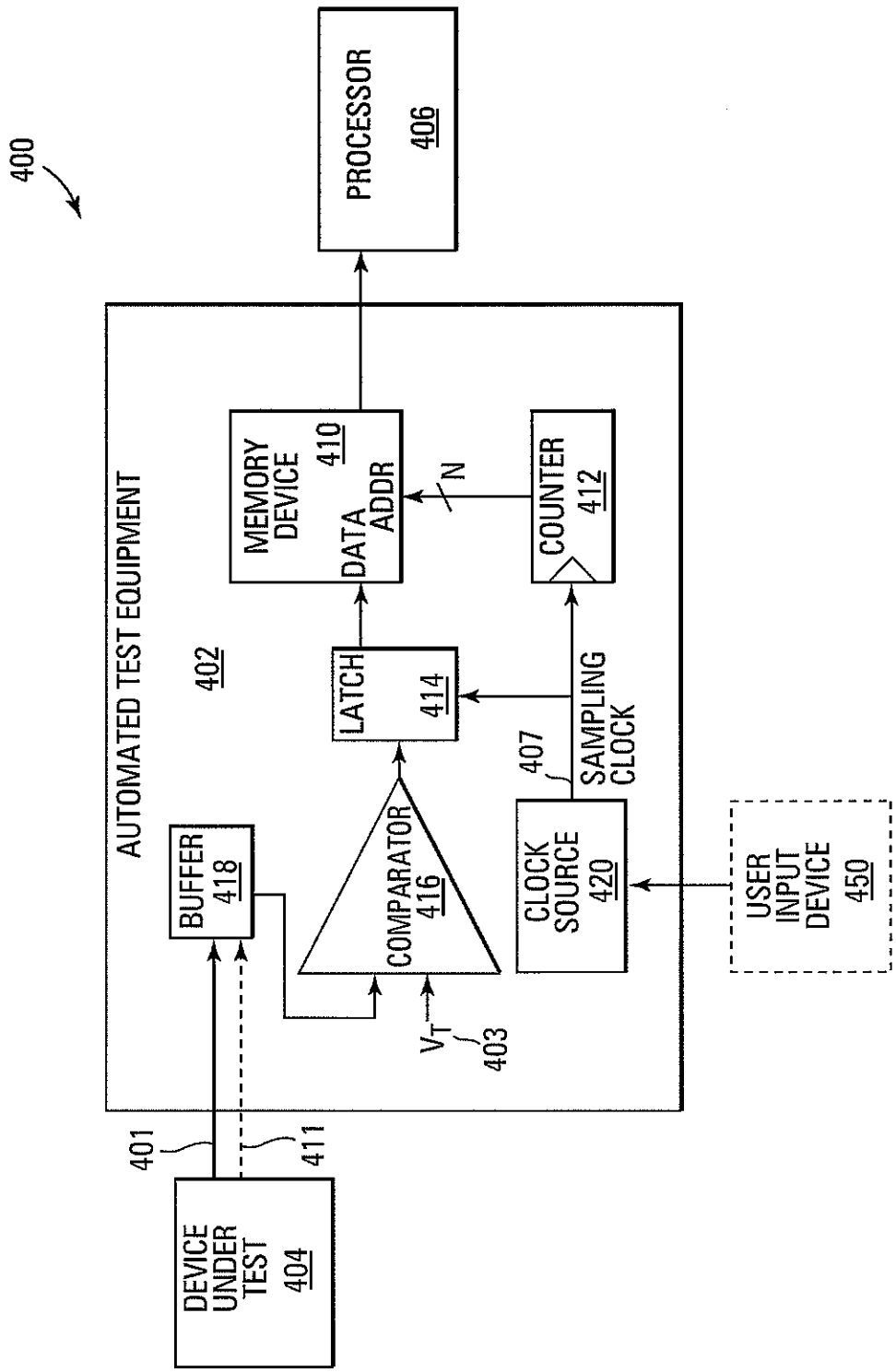
400
PROCESSOR
406
AUTOMATED TEST EQUIPMENT
402
MEMORY DEVICE
410
DATA
ADDR
N
COUNTER
412
LATCH
414
407
SAMPLING CLOCK
BUFFER
418
COMPARATOR
416
V_T
403
CLOCK SOURCE
420
USER INPUT DEVICE
450
401
411
DEVICE UNDER TEST
404

Fig. 4

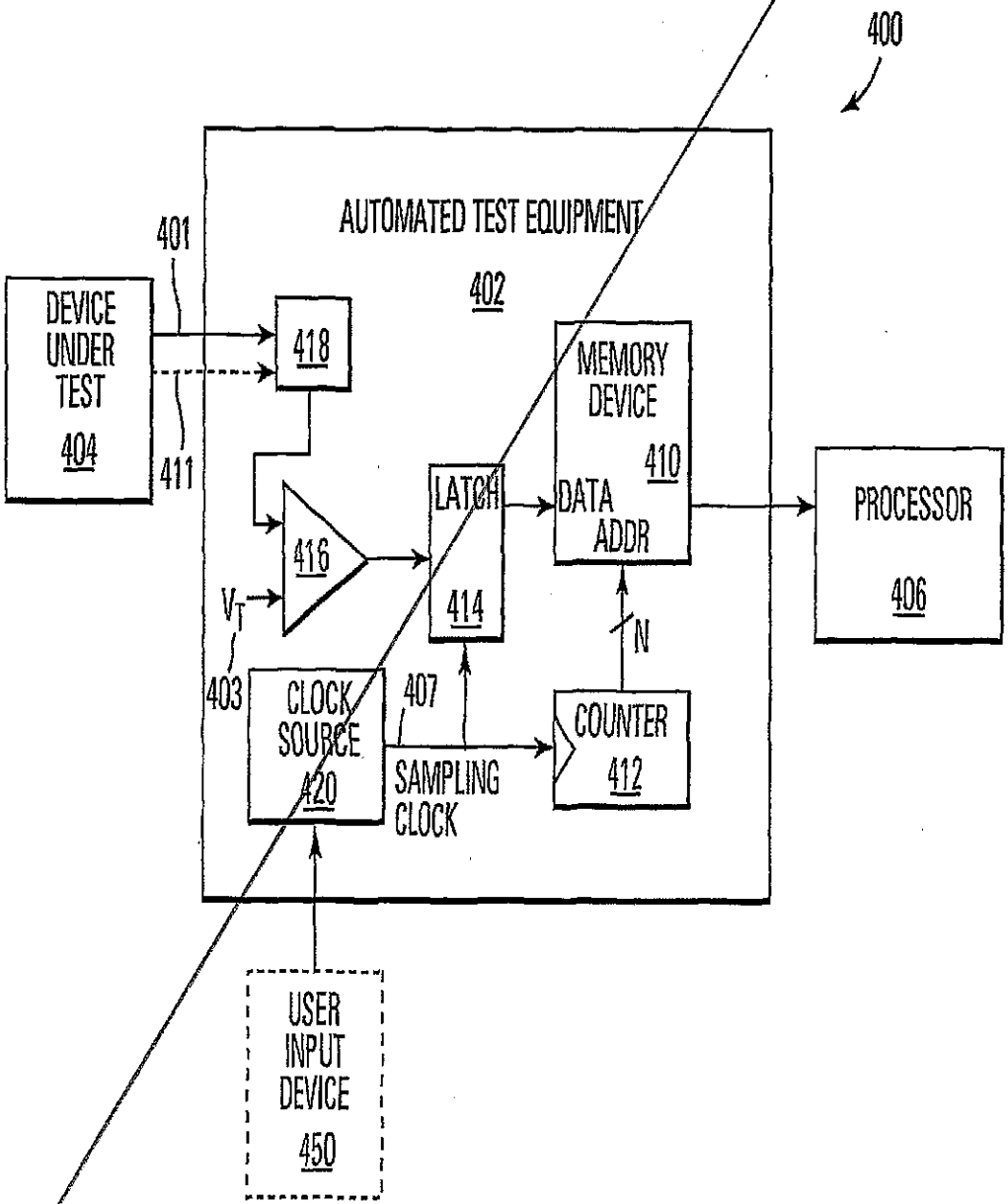
400
AUTOMATED TEST EQUIPMENT
402
DEVICE UNDER TEST
404
401
411
418
416
V_T
403
LATCH
414
MEMORY DEVICE
410
DATA
ADDR
PROCESSOR
406
N
CLOCK SOURCE
420
407
SAMPLING CLOCK
COUNTER
412
USER INPUT DEVICE
450

Fig. 4