(12) 按照专利合作条约所公布的国际申请

(19) 世界知识产权组织
国 际 局

(43) 国际公布日
2025 年 8 月 7 日 (07.08.2025)

WIPO | PCT

(10) 国际公布号
WO 2025/161190 A1

(51) 国际专利分类号:
B01F 35/42 (2022.01)

(21) 国际申请号: PCT/CN2024/095175

(22) 国际申请日: 2024 年 5 月 24 日 (24.05.2024)

(25) 申请语言: 中文

(26) 公布语言: 中文

(30) 优先权:
202420268905.6 2024年2月2日 (02.02.2024) CN

(71) 申请人: 上海镁睿科技有限公司 **(CHEMLEX TECHNOLOGY CO., LTD.)** [CN/CN]; 中国上海市浦东新区中国（上海）自由贸易试验区高科中路1976号1幢A301室 200120 (CN)。

(72) 发明人:黎翔翔**(LI, Xiangxiang)**; 中国上海市浦东新区中国（上海）自由贸易试验区高科中路1976号1幢A301室 200120 (CN)。 鲁超**(LU, Chao)**; 中国上海市浦东新区中国（上海）自由贸易试验区高科中路1976号1幢A301室 200120 (CN)。

(74) 代理人: 北京超凡宏宇知识产权代理有限公司**(CHOFN INTELLECTUAL PROPERTY)**; 中国北京市海淀区北四环西路68号左岸工社1215-1218室 100080 (CN)。

(81) 指定国(除另有指明，要求每一种可提供的国家保护): AE, AG, AL, AM, AO, AT, AU, AZ, BA, BB, BG, BH, BN, BR, BW, BY, BZ, CA, CH, CL, CN, CO, CR, CU, CV, CZ, DE, DJ, DK, DM, DO, DZ, EC, EE, EG, ES, FI, GB, GD, GE, GH, GM, GT, HN, HR, HU, ID, IL, IN, IQ, IR, IS, IT, JM, JO, JP, KE, KG, KH, KN, KP, KR, KW, KZ, LA, LC, LK, LR, LS, LU, LY, MA, MD, MG, MK, MN, MU, MW, MX, MY, MZ, NA, NG, NI, NO, NZ, OM, PA, PE, PG, PH, PL, PT, QA, RO, RS, RU, RW, SA, SC, SD, SE, SG, SK, SL, ST, SV, SY, TH, TJ, TM, TN, TR, TT, TZ, UA, UG, US, UZ, VC, VN, WS, ZA, ZM, ZW。

(84) 指定国(除另有指明，要求每一种可提供的地区保护): ARIPO (BW, CV, GH, GM, KE, LR, LS, MW, MZ, NA, RW, SC, SD, SL, ST, SZ, TZ, UG, ZM, ZW), 欧亚 (AM, AZ, BY, KG, KZ, RU, TJ, TM), 欧洲 (AL, AT, BE,

(54) **Title:** BOTTLE HOLDING DEVICE, ULTRASONIC DISSOLUTION APPARATUS AND ULTRASONIC DISSOLUTION SYSTEM

(54) 发明名称: 夹瓶装置、超声溶解设备及超声溶解系统

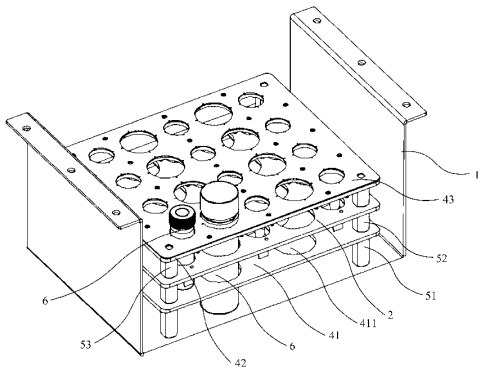

图 1

(57) **Abstract:** The present disclosure relates to the technical field of experimental instruments. Provided are a bottle holding device, an ultrasonic dissolution apparatus and an ultrasonic dissolution system. The bottle holding device comprises a support, a fixing plate and a holding assembly, wherein the fixing plate is fixed to the support, and the fixing plate is provided with a preset number of guide holes; at least one guide hole in the preset number of guide holes is correspondingly provided with a holding assembly, the holding assembly encloses a holding space, and the holding space is in communication with the interior of the guide hole corresponding to the holding assembly; and at least part of a member to be held can extend into the holding space through the guide hole, and the holding assembly can apply a force towards the interior of the holding space to the member to be held. The bottle holding device disclosed in the present disclosure can fix the member to be held by means of the guide hole and the holding assembly, thereby improving the stability of fixing the member to be held, and reducing the risk of the member to be held tipping over.

WO 2025/161190 A1

[见续页]

BG, CH, CY, CZ, DE, DK, EE, ES, FI, FR, GB, GR, HR, HU, IE, IS, IT, LT, LU, LV, MC, ME, MK, MT, NL, NO, PL, PT, RO, RS, SE, SI, SK, SM, TR), OAPI (BF, BJ, CF, CG, CI, CM, GA, GN, GQ, GW, KM, ML, MR, NE, SN, TD, TG)。

本国际公布:
— 包括国际检索报告(条约第21条(3))。

(57) 摘要: 本公开提供一种夹瓶装置、超声溶解设备及超声溶解系统，涉及实验仪器技术领域。夹瓶装置包括支架、固定板和夹持组件，固定板固定在支架上，固定板开设有预定数量的导向孔；预定数量的导向孔中的至少一个导向孔对应设置有夹持组件，夹持组件围设出夹持空间，夹持空间与和夹持组件对应的导向孔的内部连通，待夹持件的至少部分能够经导向孔伸入夹持空间内，夹持组件能够对待夹持件施加朝向夹持空间内部的力。本公开的夹瓶装置通过导向孔和夹持组件对待夹持件进行固定，提升了对待夹持件固定的稳定性，降低了待夹持件倾倒的风险。