FIG.1

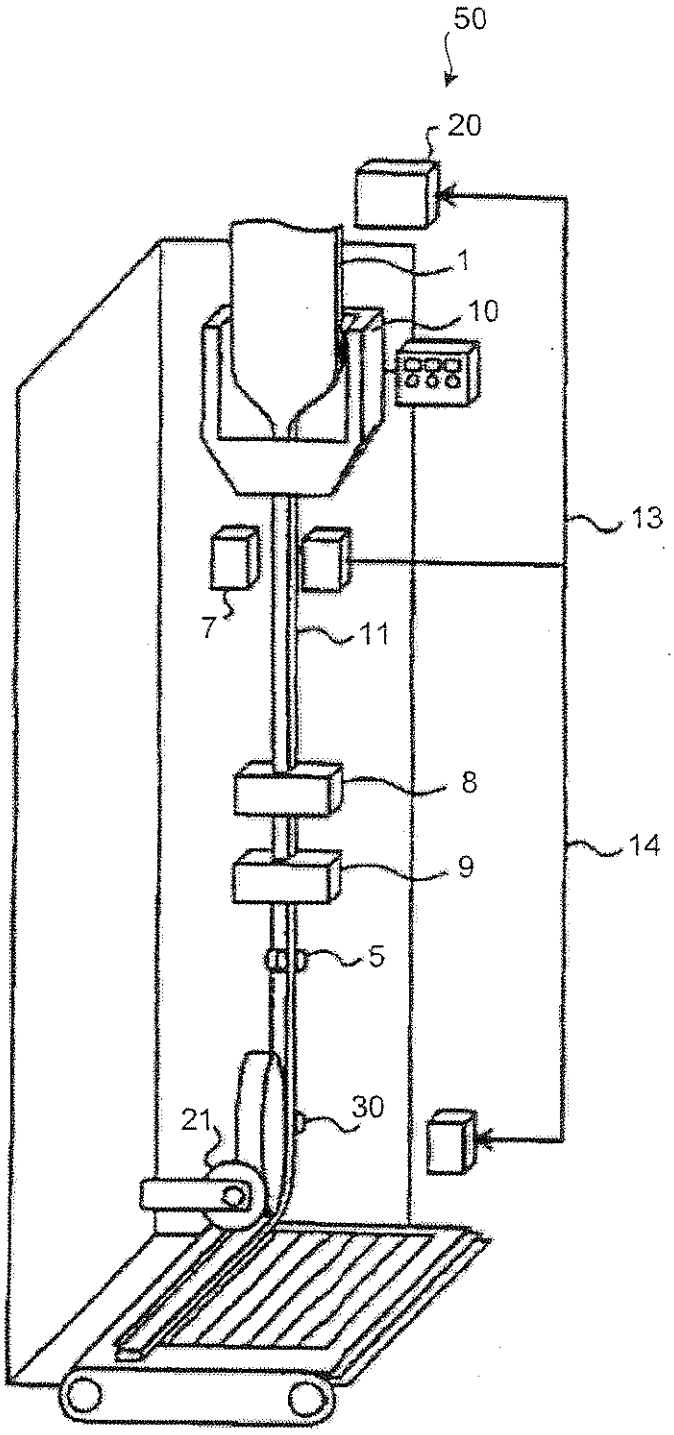

FIG.2

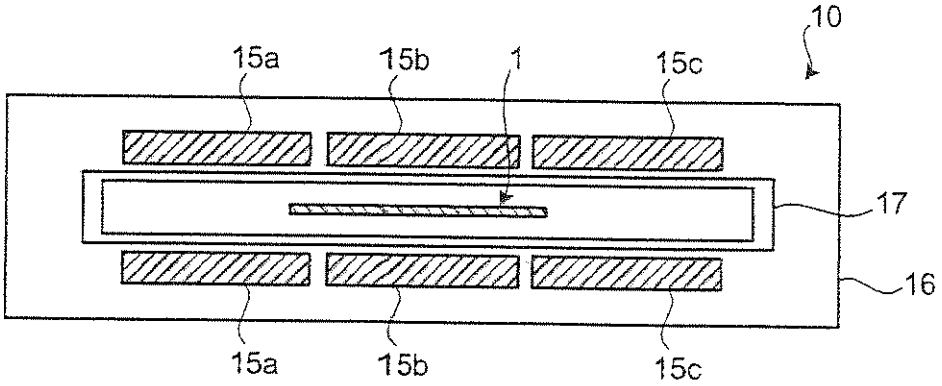

FIG.3

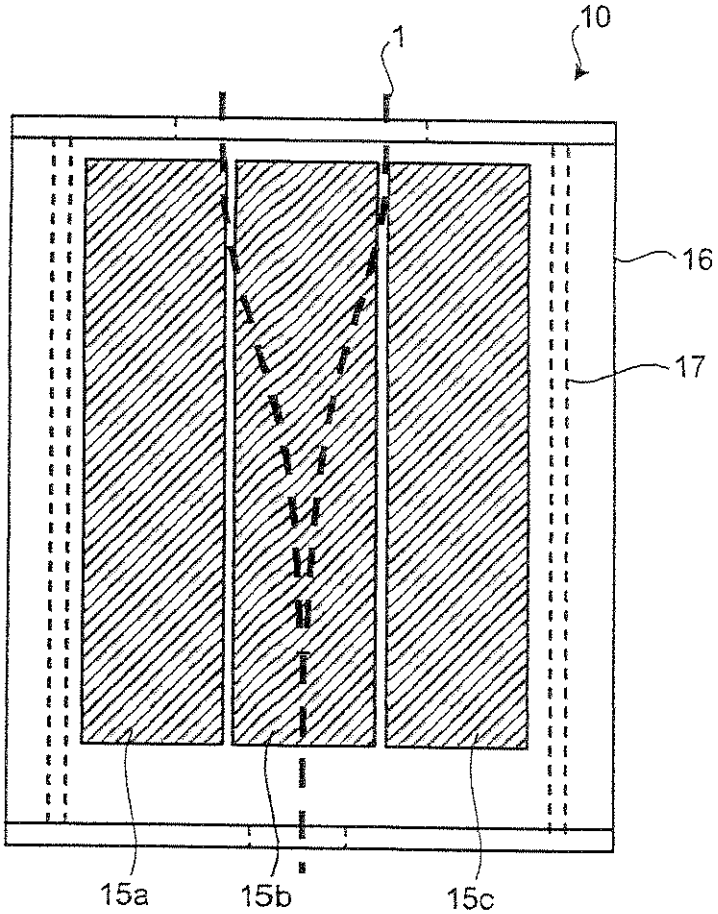

FIG.4

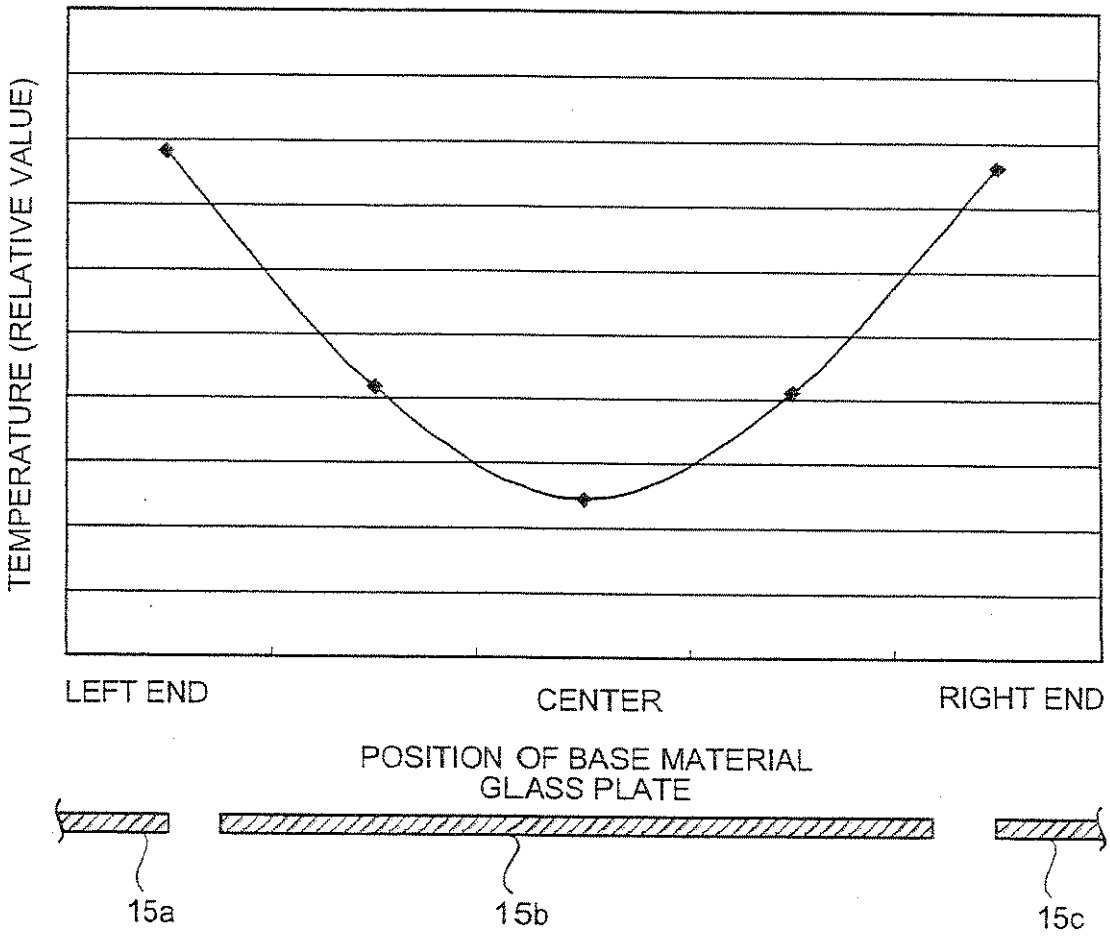
TEMPERATURE (RELATIVE VALUE)
LEFT END
CENTER
RIGHT END
POSITION OF BASE MATERIAL GLASS PLATE
15a
15b
15c

FIG.5

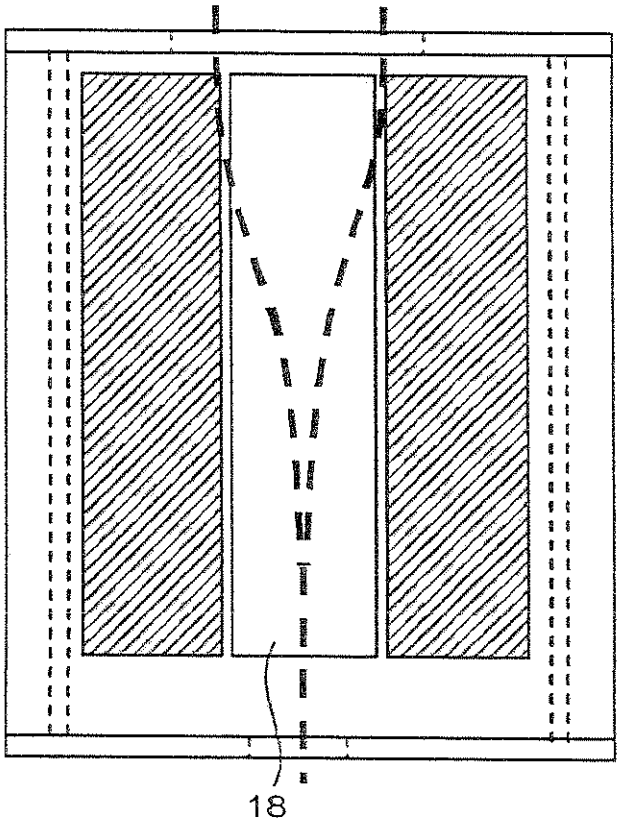

FIG.6

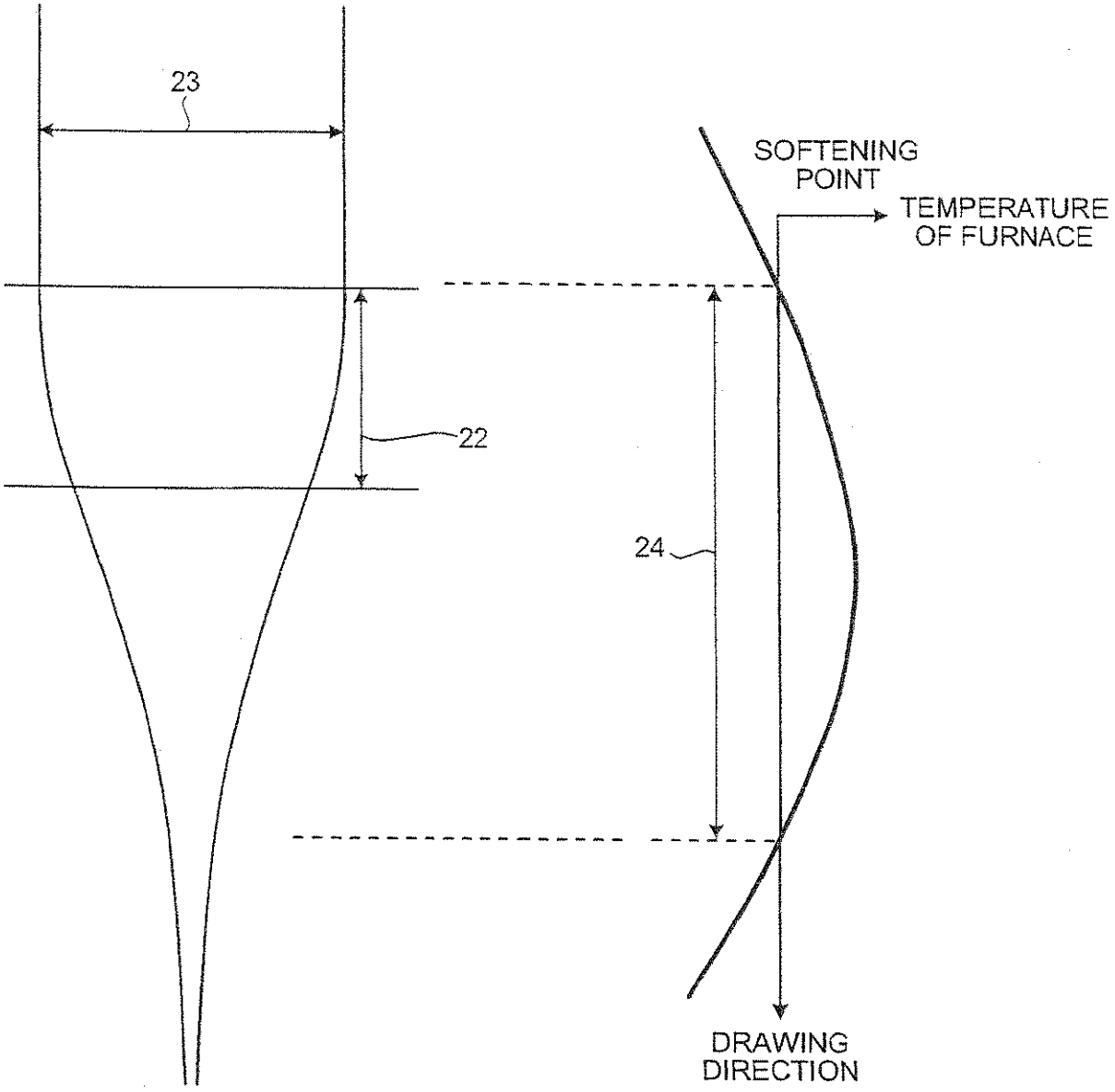
23
22
24
SOFTENING POINT
TEMPERATURE OF FURNACE
DRAWING DIRECTION

FIG.7

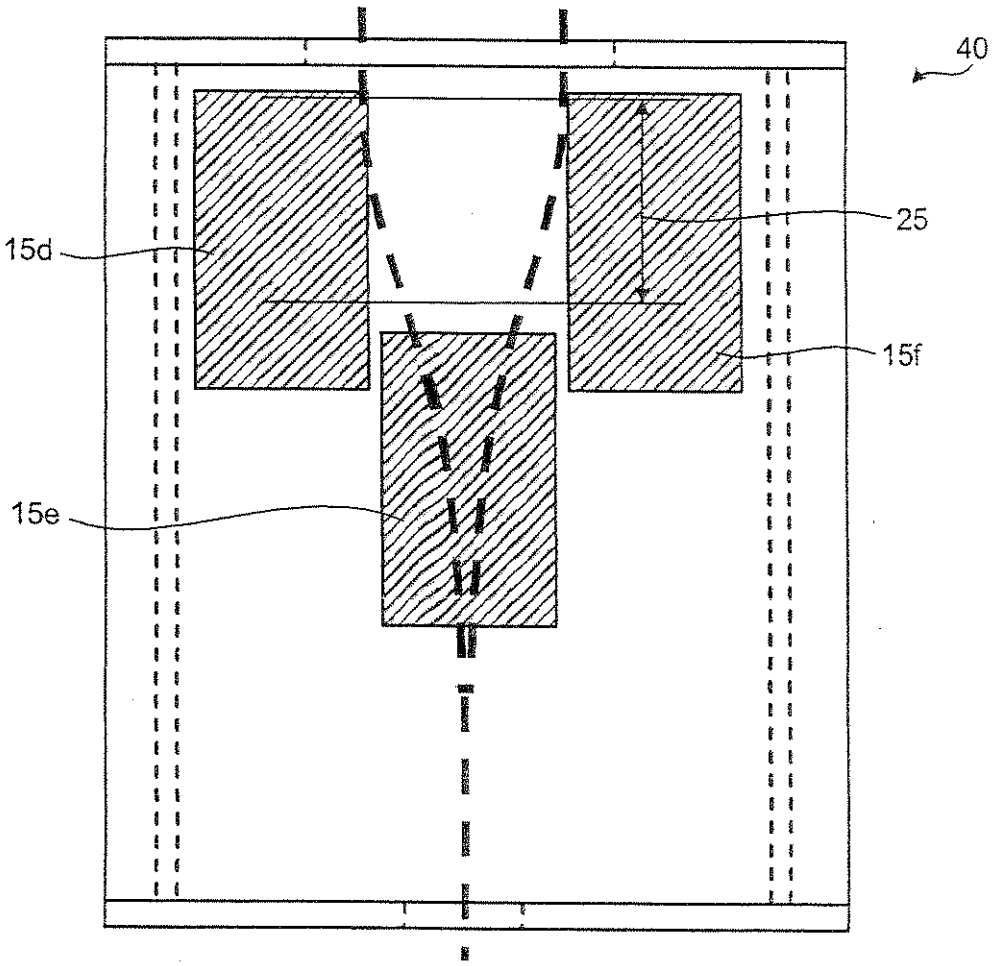

FIG.8

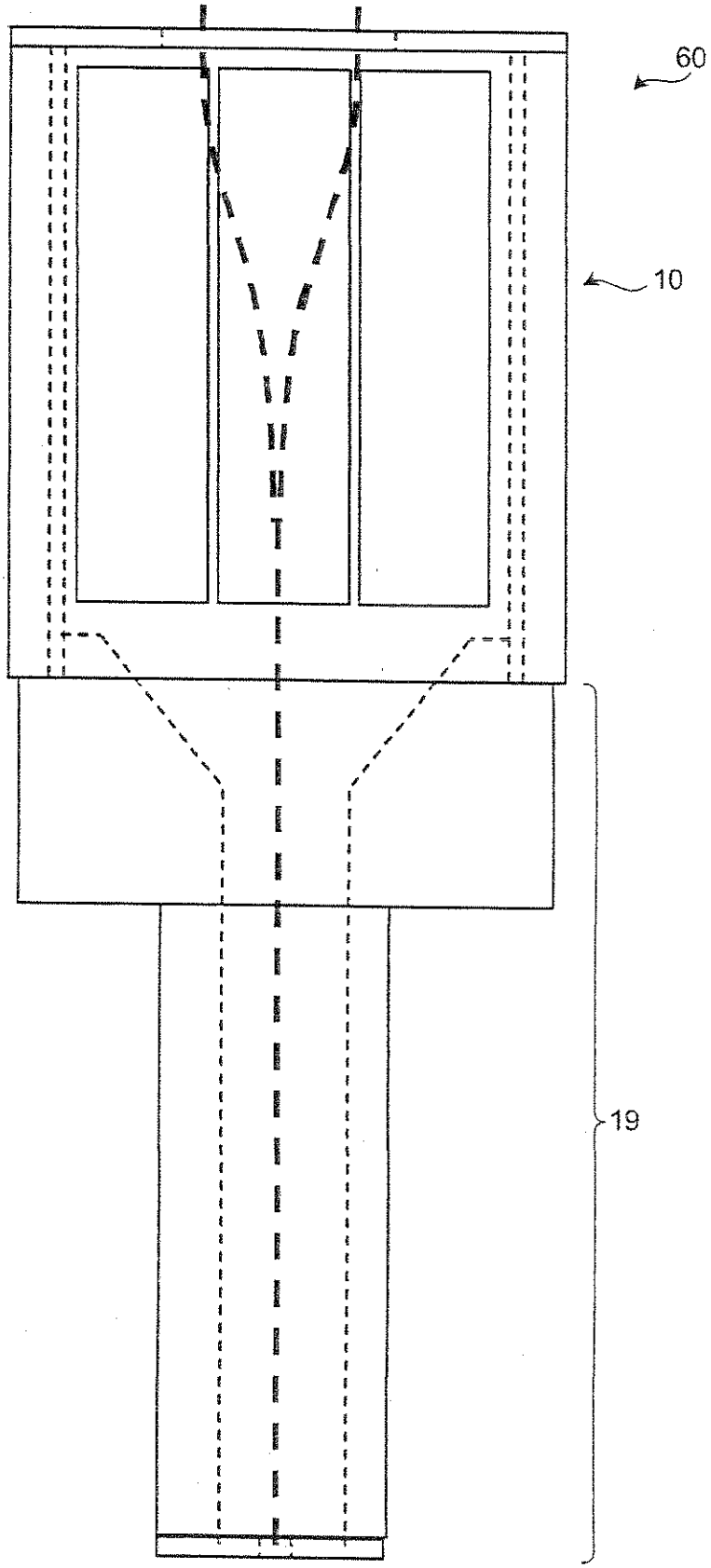

FIG.9

	BASE MATERIAL GLASS PLATE	HEATER TEMPERATURE [°C]			TEMPERATURE DISTRIBUTION OF BASE MATERIAL GLASS PLATE [°C]			VISCOSITY OF BASE MATERIAL GLASS PLATE (POISE)		
	MATERIAL	SIDES	CENTER	TENPERATURE DIFFERENCE	SIDES	CENTER	TEMPERATURE DIFFERENCE	SIDES	CENTER	VISCOSITY RATIO
EXAMPLE 1	TEMPAX	1010	900	110	945	915	30	7.9×10^5	2.7×10^6	3.4
COMPARATIVE EXAMPLE 1	TEMPAX	1000	1000	0	980	985	-5	1.9×10^5	1.5×10^5	0.8
EXAMPLE 2	TEMPAX	1055	NA	---	980	920	60	1.9×10^5	2.2×10^6	11.6
EXAMPLE 3	TEMPAX	1055	NA	---	980	900	80	1.9×10^5	5.0×10^6	26.3
EXAMPLE 4	QUARTZ	2020	1780	240	1950	1790	160	7.9×10^5	2.7×10^6	3.4
EXAMPLE 5	TEMPAX	1010	900	110	945	915	30	7.9×10^5	2.7×10^6	3.4

GLASS STRIP			
WIDTH [mm]	THICKNESS [mm]	ASPECT RATIO	FLATNESS [μm]
25	0.38	66	5
25	0.38	66	40
25	0.38	66	3
25	0.38	66	10
25	0.38	66	2
25	0.38	66	5

FIG.10

	BASE MATERIAL GLASS PLATE				HEATER			MENISCUS	
	WIDTH [mm]	THICKNESS [mm]	LENGTH [mm]	ASPECT RATIO	LENGTH [mm]	HEAT ZONE LENGTH [mm]	HEAT ZONE LENGTH/BASE MATERIAL WIDTH	LENGTH [mm]	MENISCUS LENGTH/BASE MATERIAL WIDTH
EXAMPLE 6	328	5	1.5	66	1280	1170	3.6	395	1.2
COMPARATIVE EXAMPLE 2	328	5	1.5	66	620	600	1.8	200	0.61
EXAMPLE 7	780	7	2	111	1600	1460	1.9	530	0.68
EXAMPLE 8	328	5	1.5	66	1600	1460	4.5	490	1.5

GLASS STRIP			
WIDTH [mm]	THICKNESS [mm]	ASPECT RATIO	FLATNESS [μm]
25	0.38	66	5
25	0.38	66	40
70	0.64	109	5
25	0.38	66	5

FIG.11

	BASE MATERIAL GLASS PLATE				HEATER TEMPERATURE [°C]			TEMPERATURE DISTRIBUTION OF BASE MATERIAL GLASS PLATE [°C]			HEATER		
	THICKNESS [mm]	WIDTH [mm]	LENGTH [mm]	ASPECT RATIO	SIDES	CENTER	TEMPERATURE DIFFERENCE	SIDES	CENTER	TEMPERATURE DIFFERENCE	LENGTH [mm]	HEAT ZONE LENGTH [mm]	HEAT ZONE LENGTH/BASE MATERIAL WIDTH
EXAMPLE 9	328	5	1.5	66	1055	875	180	980	920	60	950	870	2.7
EXAMPLE 10	328	5	1.5	66	1055	875	180	980	920	60	620	600	1.8
EXAMPLE 11	328	5	1.5	66	1055	NA	—	980	920	60	500	870	2.7

VISCOSITY OF BASE MATERIAL GLASS PLATE (POISE)			MENISCUS		GLASS STRIP			
SIDES	CENTER	VISCOSITY RATIO	LENGTH [mm]	MENISCUS LENGTH/BASE MATERIAL WIDTH	WIDTH [mm]	THICKNESS [mm]	ASPECT RATIO	FLATNESS [μm]
1.9×10^5	2.2×10^6	11.6	288	0.88	25	0.38	66	1
1.9×10^5	2.2×10^6	11.6	200	0.61	25	0.38	66	3
1.9×10^5	2.2×10^6	11.6	288	0.88	25	0.38	66	1