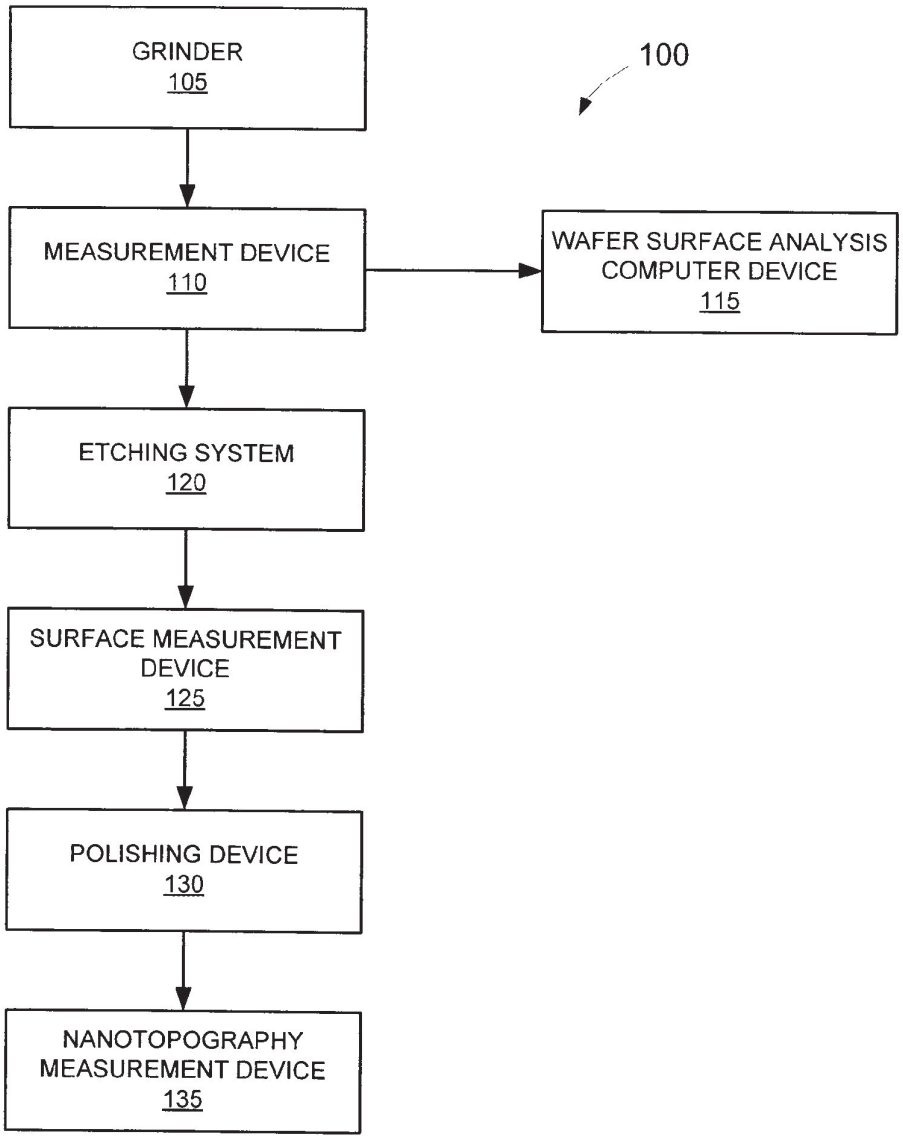
GRINDER
105
100
MEASUREMENT DEVICE
110
WAFER SURFACE ANALYSIS
COMPUTER DEVICE
115
ETCHING SYSTEM
120
SURFACE MEASUREMENT
DEVICE
125
POLISHING DEVICE
130
NANOTOPOGRAPHY
MEASUREMENT DEVICE
135

FIG. 1

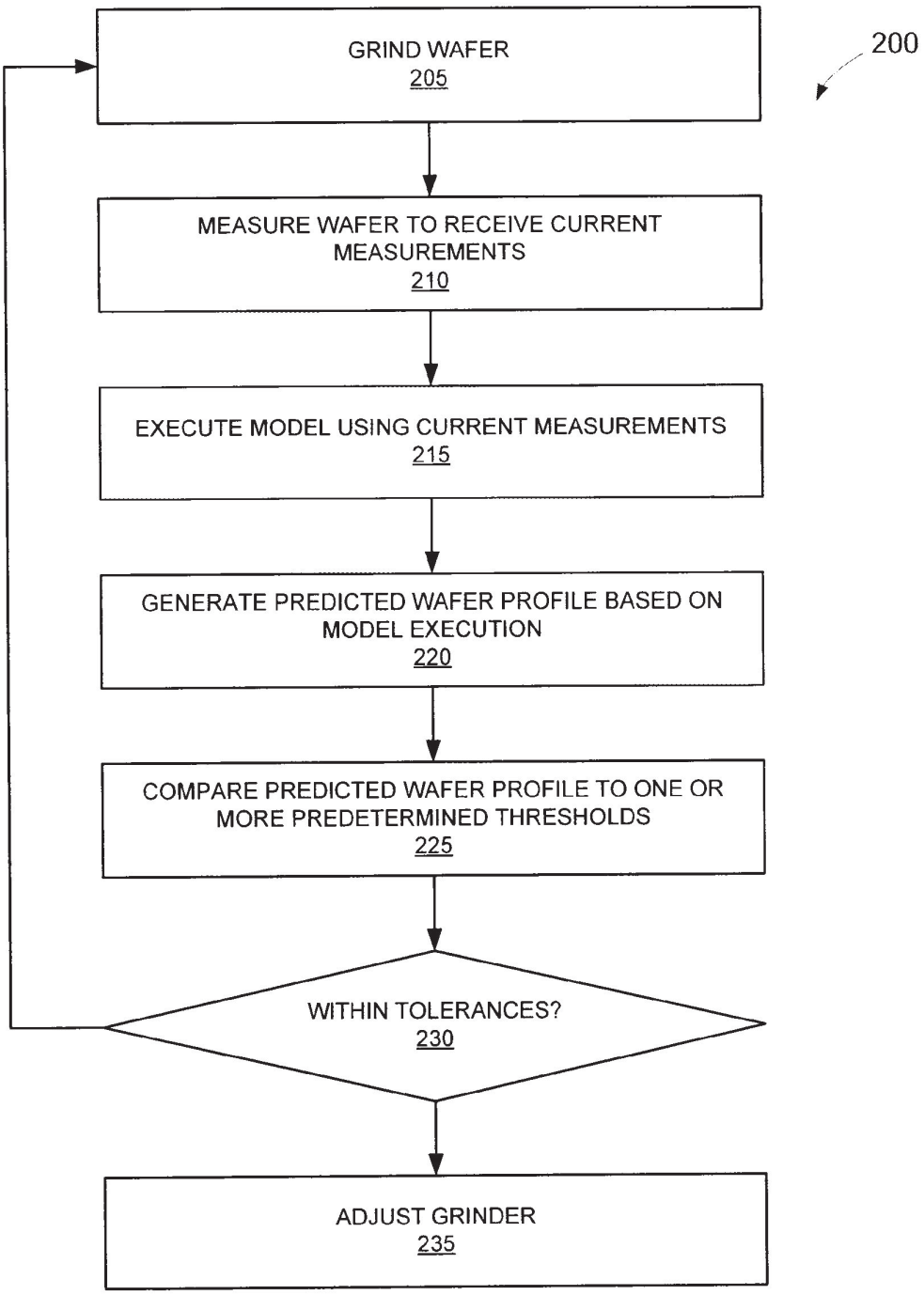
GRIND WAFER
205
200
MEASURE WAFER TO RECEIVE CURRENT MEASUREMENTS
210
EXECUTE MODEL USING CURRENT MEASUREMENTS
215
GENERATE PREDICTED WAFER PROFILE BASED ON MODEL EXECUTION
220
COMPARE PREDICTED WAFER PROFILE TO ONE OR MORE PREDETERMINED THRESHOLDS
225
WITHIN TOLERANCES?
230
ADJUST GRINDER
235

FIG. 2

FIG. 3

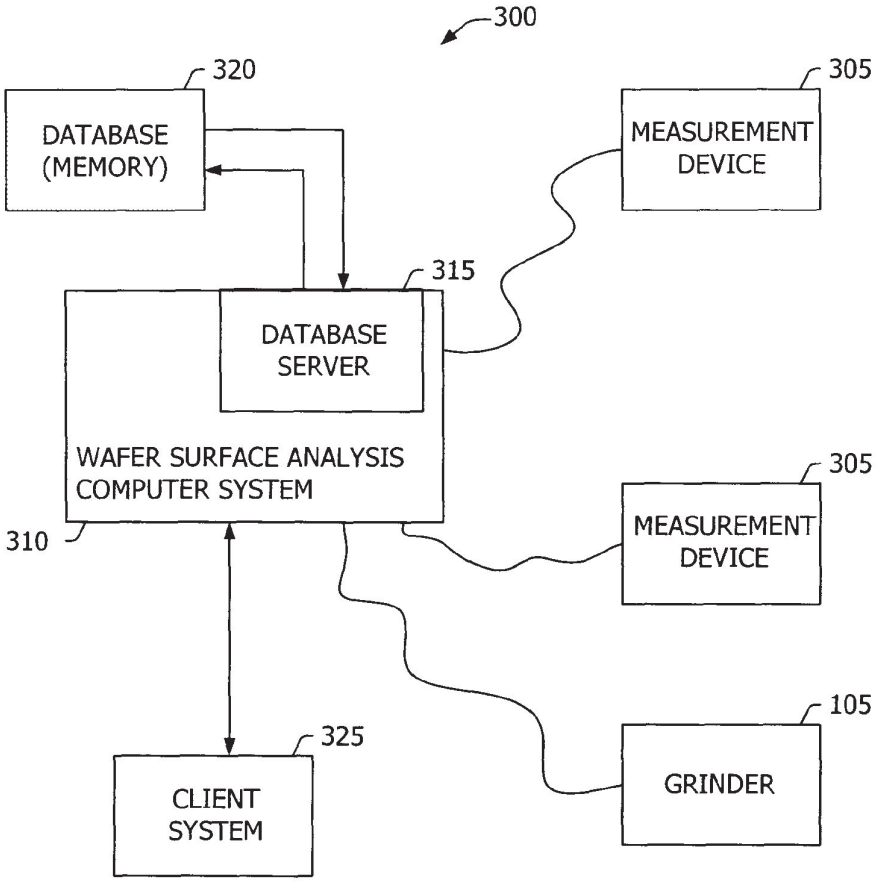
300
320
DATABASE
(MEMORY)
305
MEASUREMENT
DEVICE
315
DATABASE
SERVER
WAFER SURFACE ANALYSIS
COMPUTER SYSTEM
310
305
MEASUREMENT
DEVICE
105
GRINDER
325
CLIENT
SYSTEM

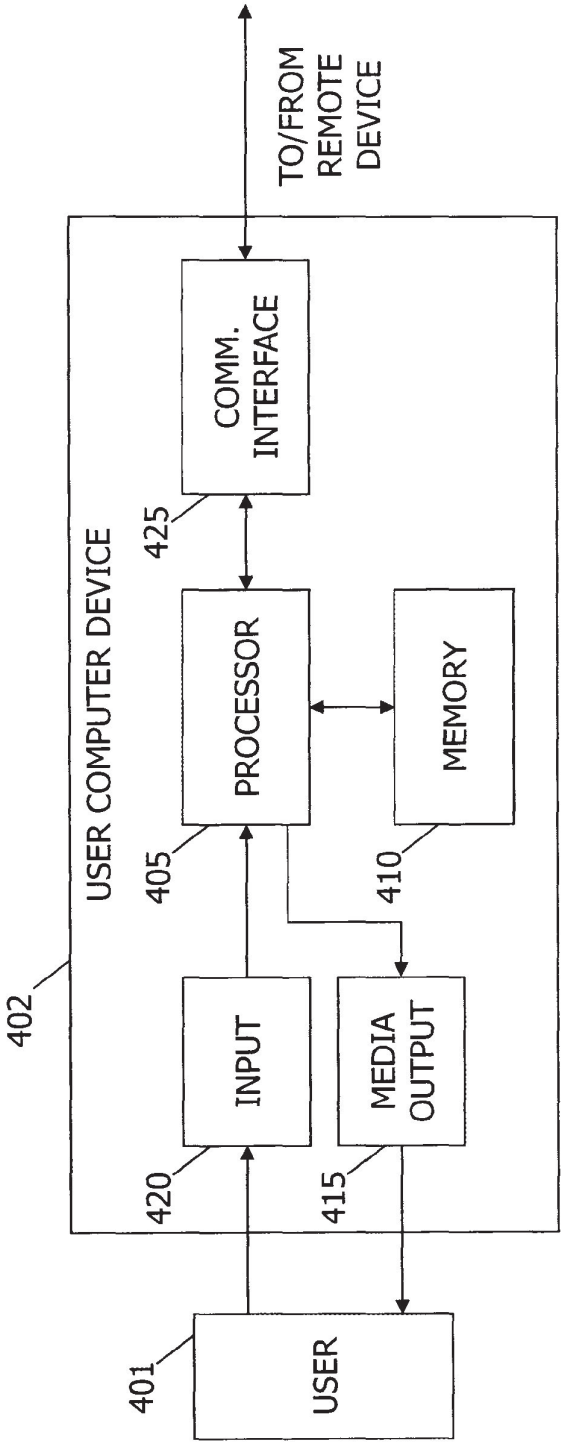
TO/FROM REMOTE DEVICE
COMM. INTERFACE
425
USER COMPUTER DEVICE
PROCESSOR
MEMORY
405
410
402
INPUT
MEDIA OUTPUT
420
415
USER
401

FIG. 4

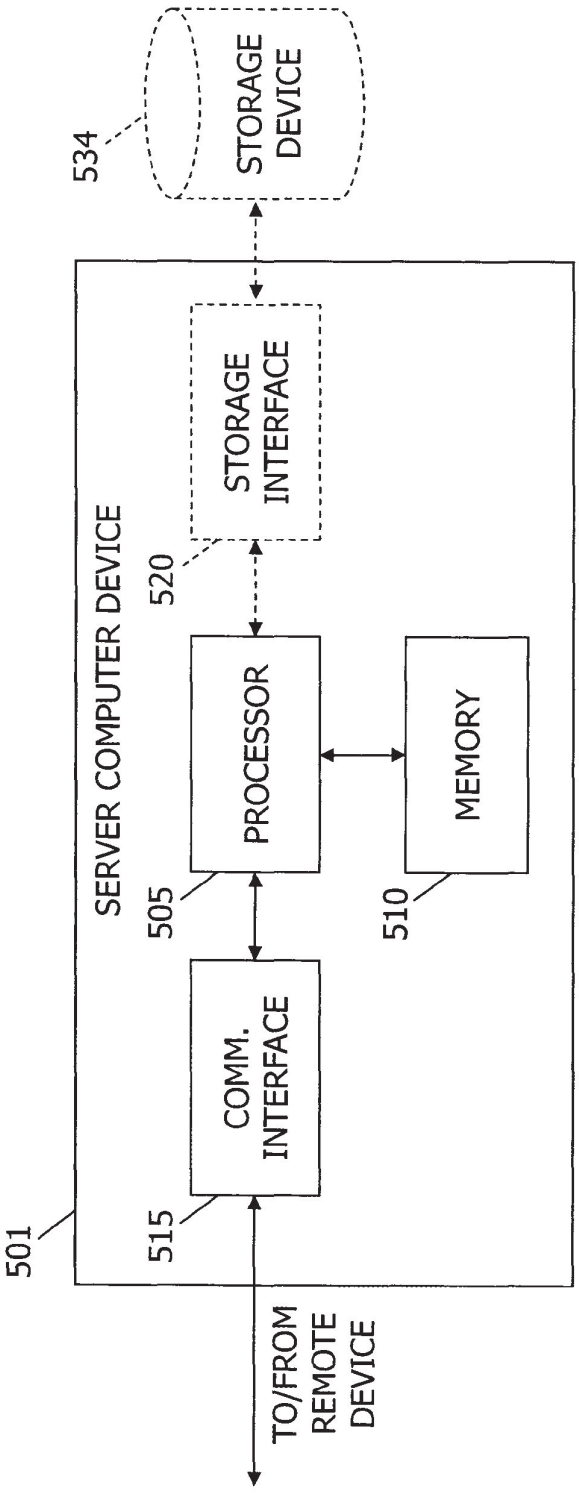
534
STORAGE DEVICE
SERVER COMPUTER DEVICE
520
STORAGE INTERFACE
505
PROCESSOR
510
MEMORY
515
COMM. INTERFACE
501
TO/FROM REMOTE DEVICE

FIG. 5

FIG. 6

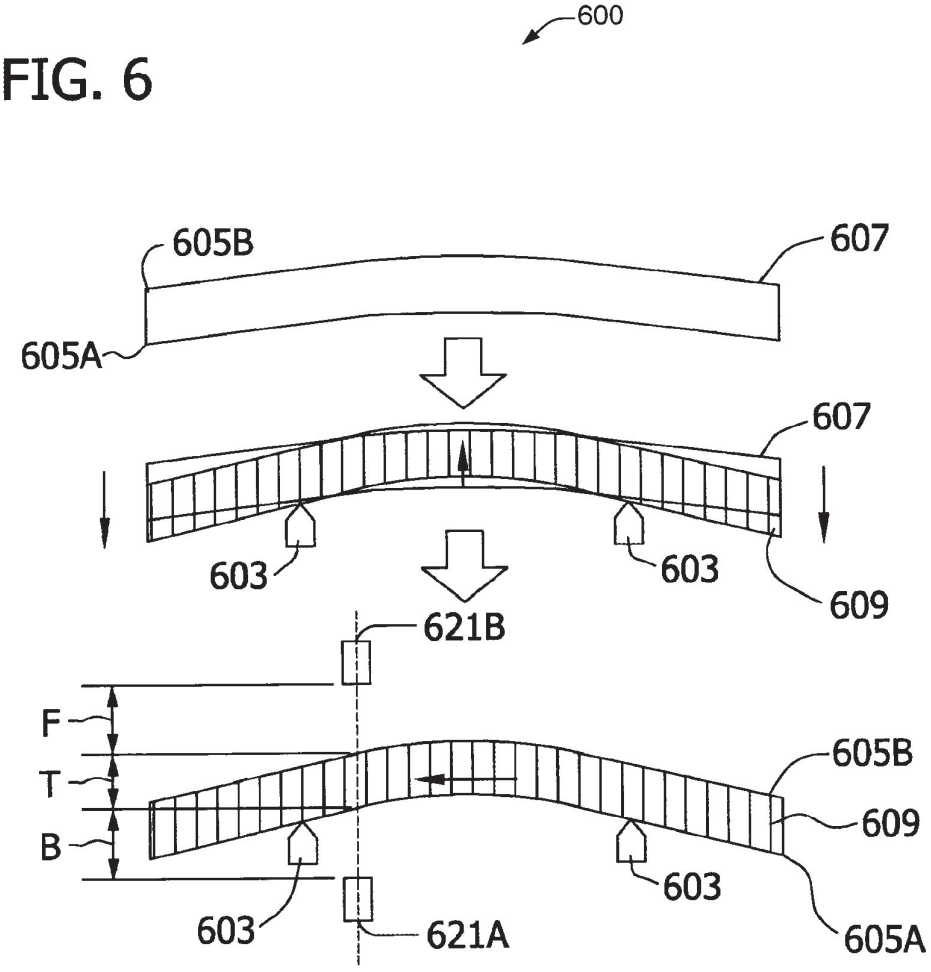
600
605B
607
605A
607
603
603
609
621B
F
T
B
605B
609
603
603
621A
605A

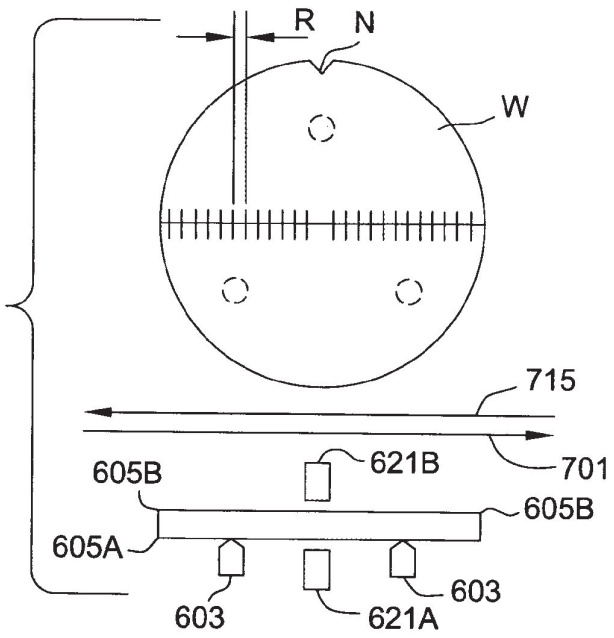
R
N
W
715
701
621B
605B
605B
605A
603
603
621A

FIG. 7A

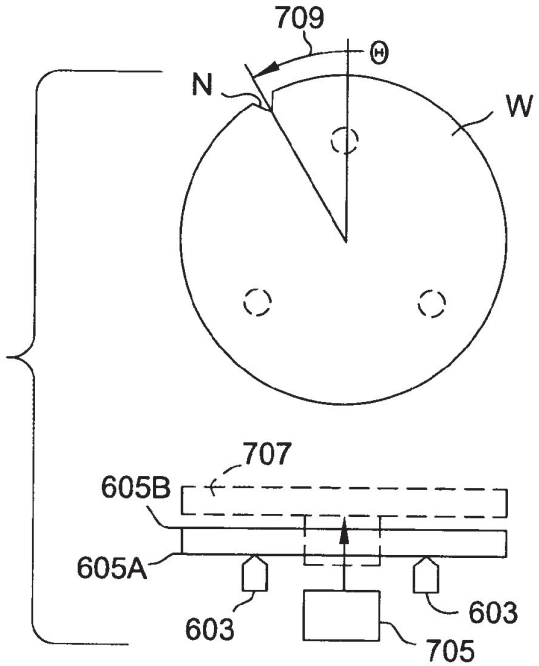
709
Θ
N
W
707
605B
605A
603
603
705

FIG. 7B

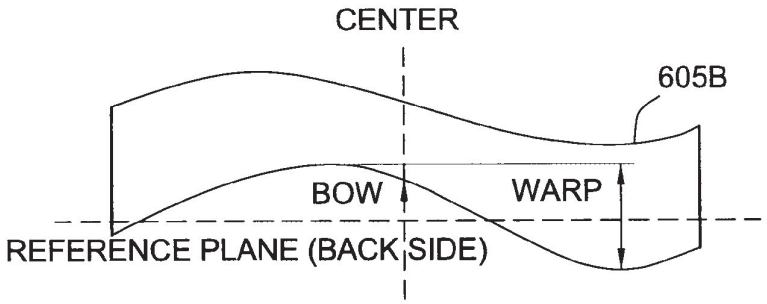
CENTER
605B
BOW
WARP
REFERENCE PLANE (BACK SIDE)

FIG. 8A


MAX
605A
MIN
GBIR

FIG. 8B

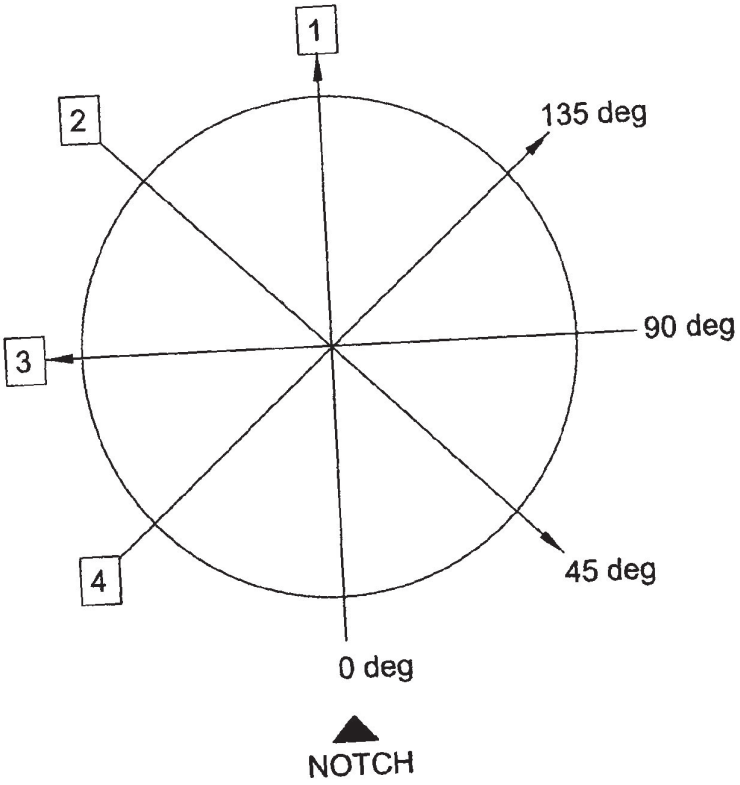

FIG. 9

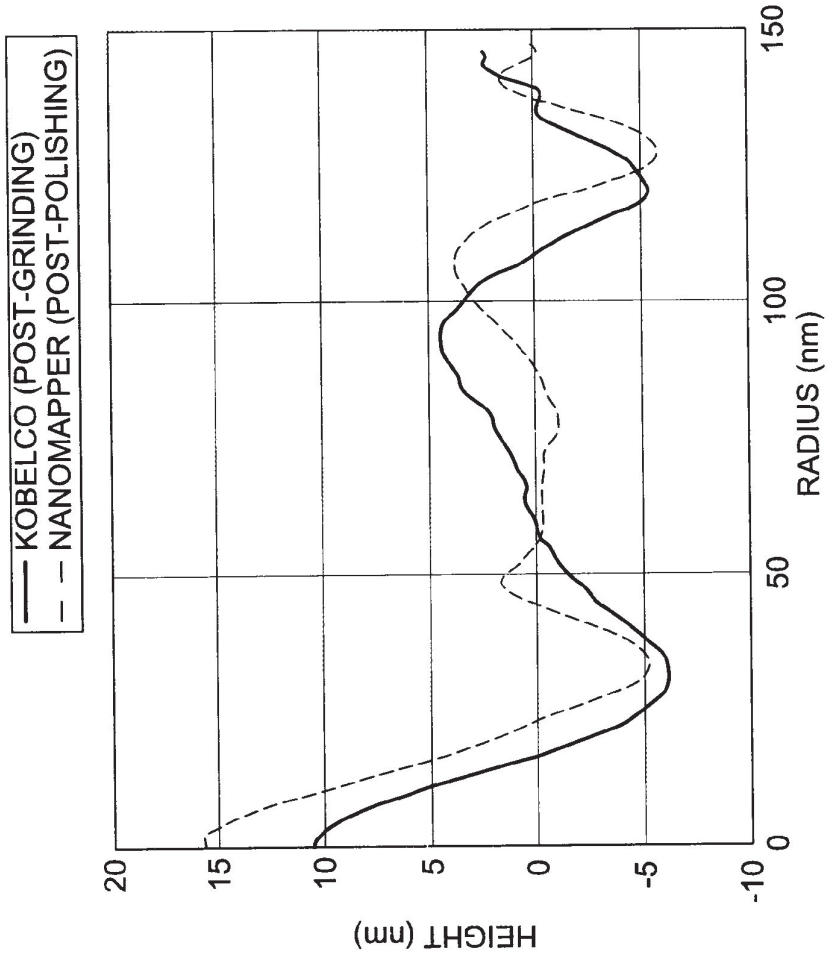
KOBELCO (POST-GRINDING)
NANOMAPPER (POST-POLISHING)
HEIGHT (nm)
20
15
10
5
0
-5
-10
0
50
100
150
RADIUS (nm)

FIG. 10

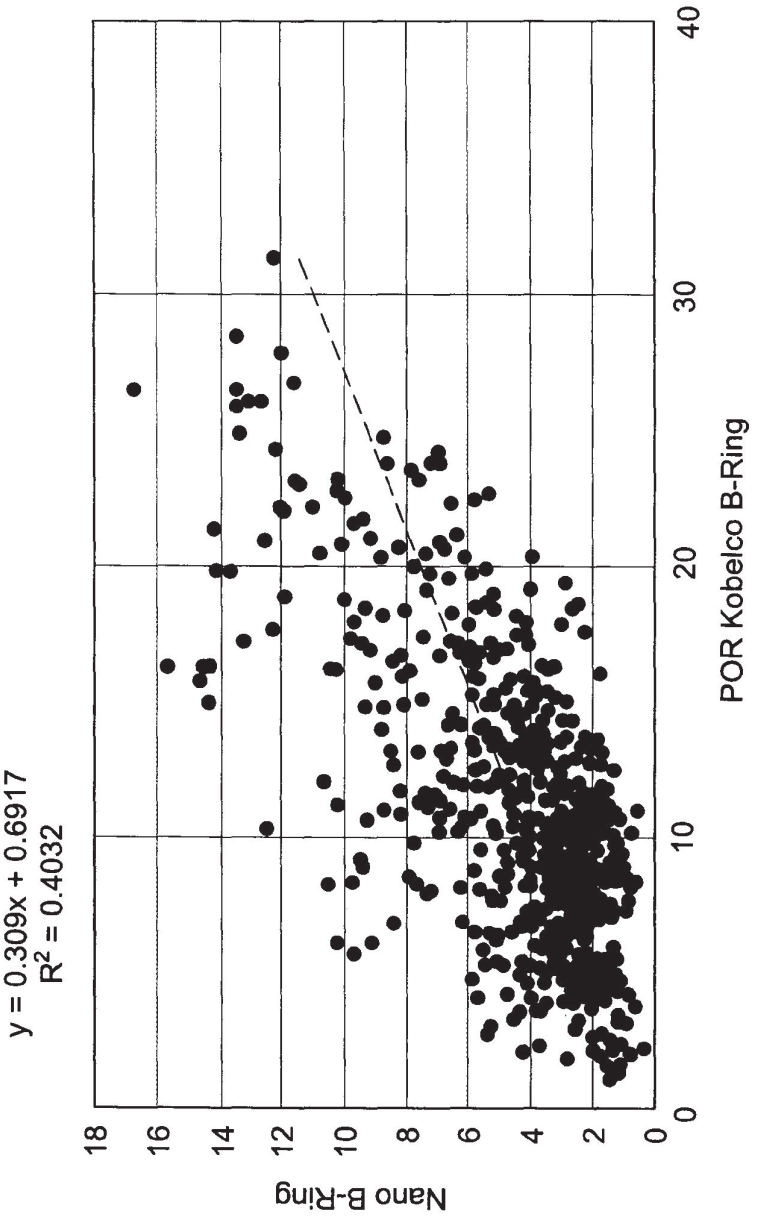
y = 0.309x + 0.6917
R2 = 0.4032
Nano B-Ring
POR Kobelco B-Ring
0
2
4
6
8
10
12
14
16
18
0
10
20
30
40

FIG. 11A

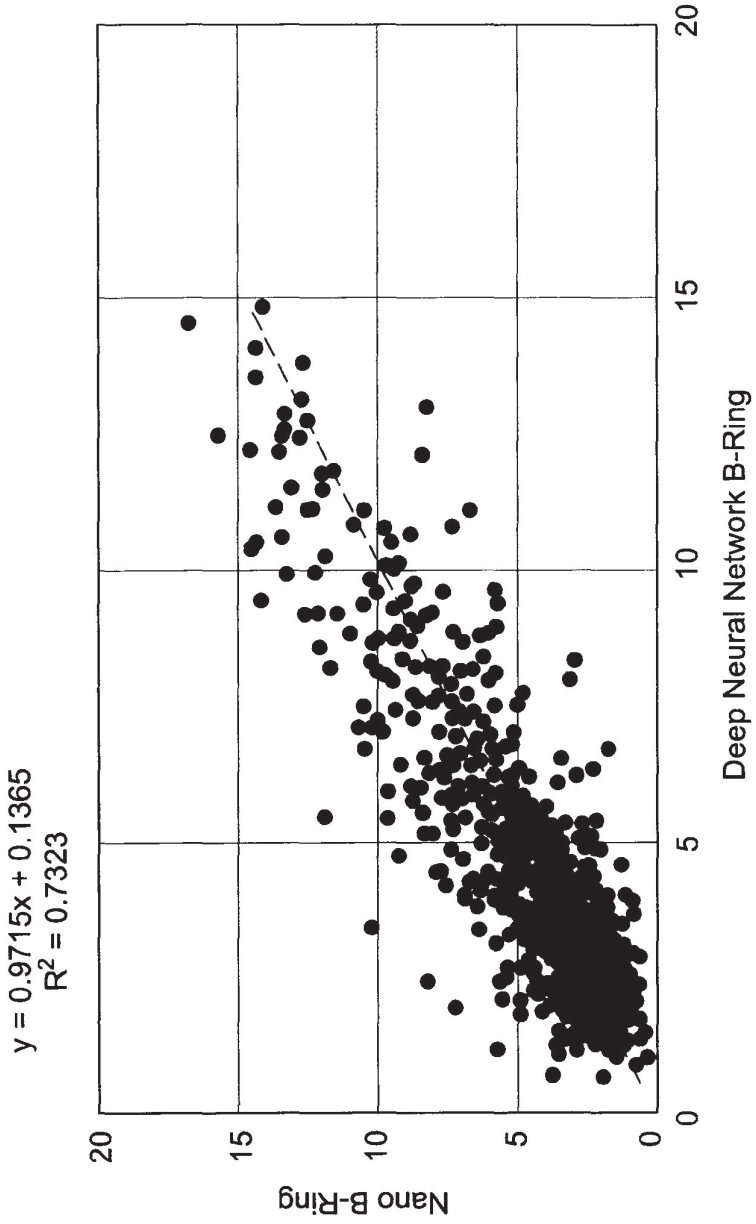
y = 0.9715x + 0.1365
R2 = 0.7323
Nano B-Ring
Deep Neural Network B-Ring
0
5
10
15
20

FIG. 11B

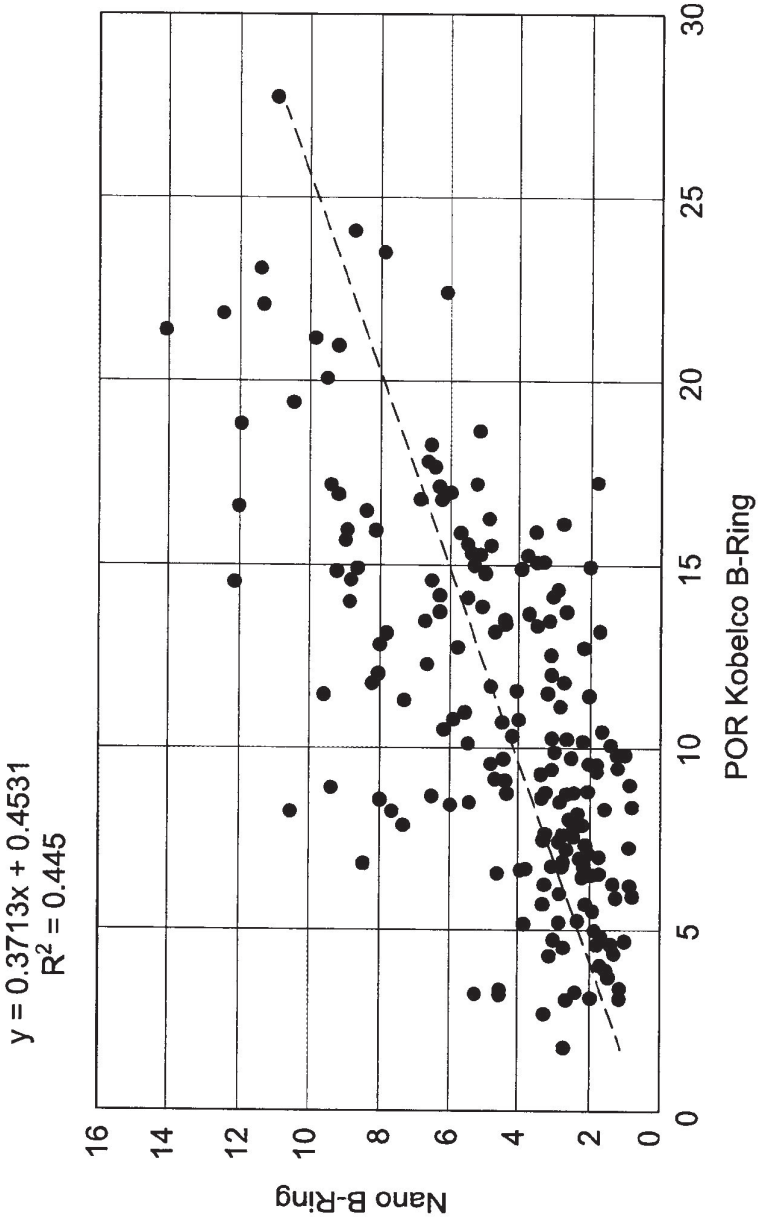
y = 0.3713x + 0.4531
R2 = 0.445
Nano B-Ring
POR Kobelco B-Ring
0
2
4
6
8
10
12
14
16
0
5
10
15
20
25
30

FIG. 12A

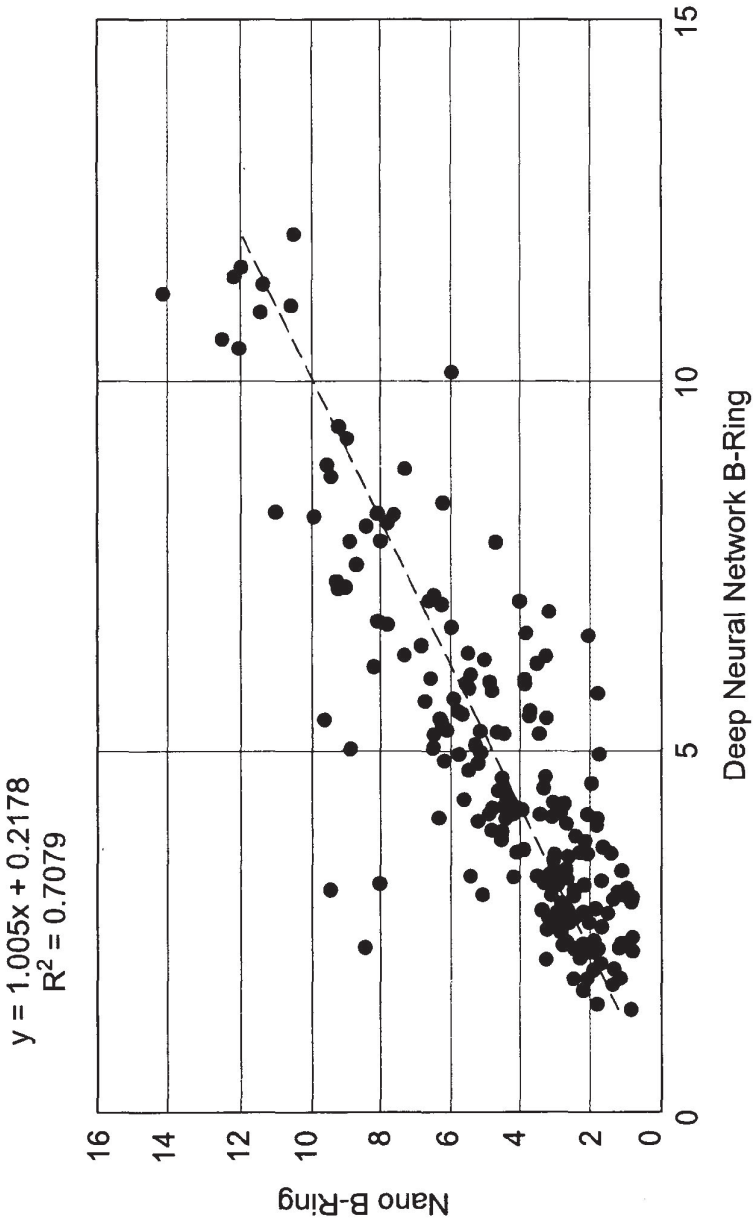
y = 1.005x + 0.2178
R2 = 0.7079
Nano B-Ring
Deep Neural Network B-Ring
0
2
4
6
8
10
12
14
16
0
5
10
15

FIG. 12B

FIG. 13

