(12) INTERNATIONAL APPLICATION PUBLISHED UNDER THE PATENT COOPERATION TREATY (PCT)

(19) World Intellectual Property Organization
International Bureau

(43) International Publication Date
24 May 2012 (24.05.2012)

WIPO | PCT

(10) International Publication Number
WO 2012/067749 A1

(51) International Patent Classification:
E02B 17/00 (2006.01)

(21) International Application Number:
PCT/US2011/057095

(22) International Filing Date:
20 October 2011 (20.10.2011)

(25) Filing Language: English

(26) Publication Language: English

(30) Priority Data:
61/414,950 18 November 2010 (18.11.2010) US

(71) Applicant *(for all designated States except US)*: **CONOCOPHILLIPS COMPANY** [US/US]; 600 N. Dairy Ashford, IP Services Group - Attn: Docketing, Bldg. ML-1065, Houston, Texas 77079 (US).

(72) Inventors; and

(75) Inventors/Applicants *(for US only)*: **AURORA, Ravi, P.** [US/US]; 1711 Peppervine Way, Sugar Land, Texas 77479 (US). **RAMSEY, Thomas, E.** [US/US]; 10535 Jaycreek Dr., Houston, Texas 77070 (US). **SHAFER, Randall, S.** [US/US]; 203 Birdsall Street, Houston, Texas 77007 (US). **NOBLE, Peter, G.** [CA/US]; 8922 Herts Road, Spring, Texas 77379 (US). **WESTERMAN, Ted, H.** [US/US]; 13202 Dusty Grove Lane, Sugar Land, Texas 77498 (US). **BERTA, Dominique, P.** [US/US]; 21111 Crystal Greens, Katy, Texas 77450 (US).

(74) Agent: **WESTPHAL, David, W.**; 600 North Dairy Ashford, IP Legal Services - Attn: Docketing, Bldg. ML-1065, Houston, Texas 77079 (US).

(81) Designated States *(unless otherwise indicated, for every kind of national protection available)*: AE, AG, AL, AM, AO, AT, AU, AZ, BA, BB, BG, BH, BR, BW, BY, BZ, CA, CH, CL, CN, CO, CR, CU, CZ, DE, DK, DM, DO, DZ, EC, EE, EG, ES, FI, GB, GD, GE, GH, GM, GT, HN, HR, HU, ID, IL, IN, IS, JP, KE, KG, KM, KN, KP, KR, KZ, LA, LC, LK, LR, LS, LT, LU, LY, MA, MD, ME, MG, MK, MN, MW, MX, MY, MZ, NA, NG, NI, NO, NZ, OM, PE, PG, PH, PL, PT, QA, RO, RS, RU, RW, SC, SD, SE, SG, SK, SL, SM, ST, SV, SY, TH, TJ, TM, TN, TR, TT, TZ, UA, UG, US, UZ, VC, VN, ZA, ZM, ZW.

(84) Designated States *(unless otherwise indicated, for every kind of regional protection available)*: ARIPO (BW, GH,

[Continued on next page]

(54) Title: CONICAL PILED MONOPOD

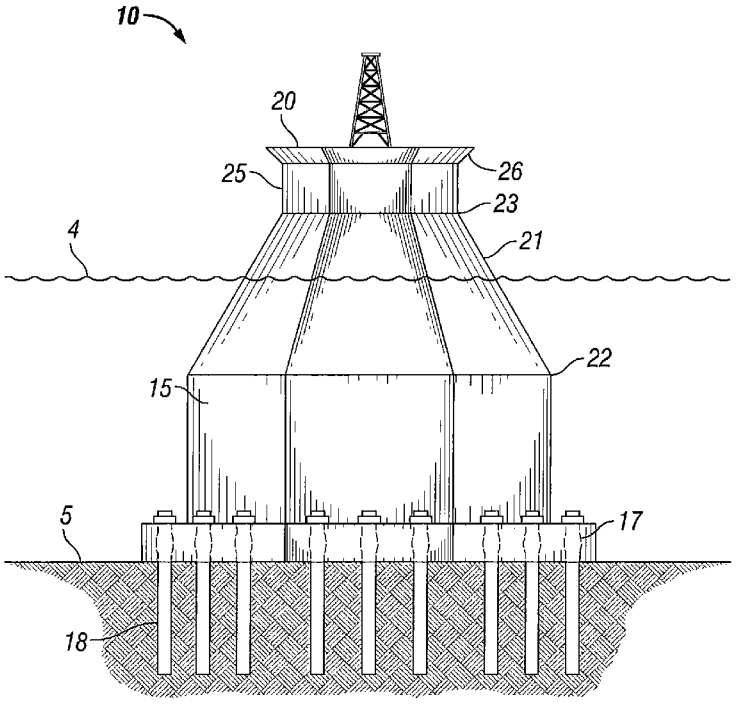

FIG. 1

(57) Abstract: The invention relates to a conical piled monopod (10) which is a fixed, ice worthy structure used in cold weather offshore environments for accessing hydrovcarbon deposits under the seafloor. The conical piled monopod provides a much lower cost offshore facility as compared to a very large, gravity based structure. The conical piled monopod has a base (17) that is designed to rest on a minimally prepared seafloor (5) and be held in a fixed locations by pilings (18) inserted deep into the seafloor. The top deck (20) is designed to be at least 60 feet across with a sloped or inclined perimeter surface (21) to bend and break the ice that comes into contact with the conical piled monopod as the ice would otherwise impose significant lateral forces.

WO 2012/067749 A1

GM, KE, LR, LS, MW, MZ, NA, RW, SD, SL, SZ, TZ, UG, ZM, ZW), Eurasian (AM, AZ, BY, KG, KZ, MD, RU, TJ, TM), European (AL, AT, BE, BG, CH, CY, CZ, DE, DK, EE, ES, FI, FR, GB, GR, HR, HU, IE, IS, IT, LT, LU, LV, MC, MK, MT, NL, NO, PL, PT, RO, RS, SE, SI, SK, SM, TR), OAPI (BF, BJ, CF, CG, CI, CM, GA, GN, GQ, GW, ML, MR, NE, SN, TD, TG).

Published:

— *with international search report (Art. 21(3))*