FIG.1

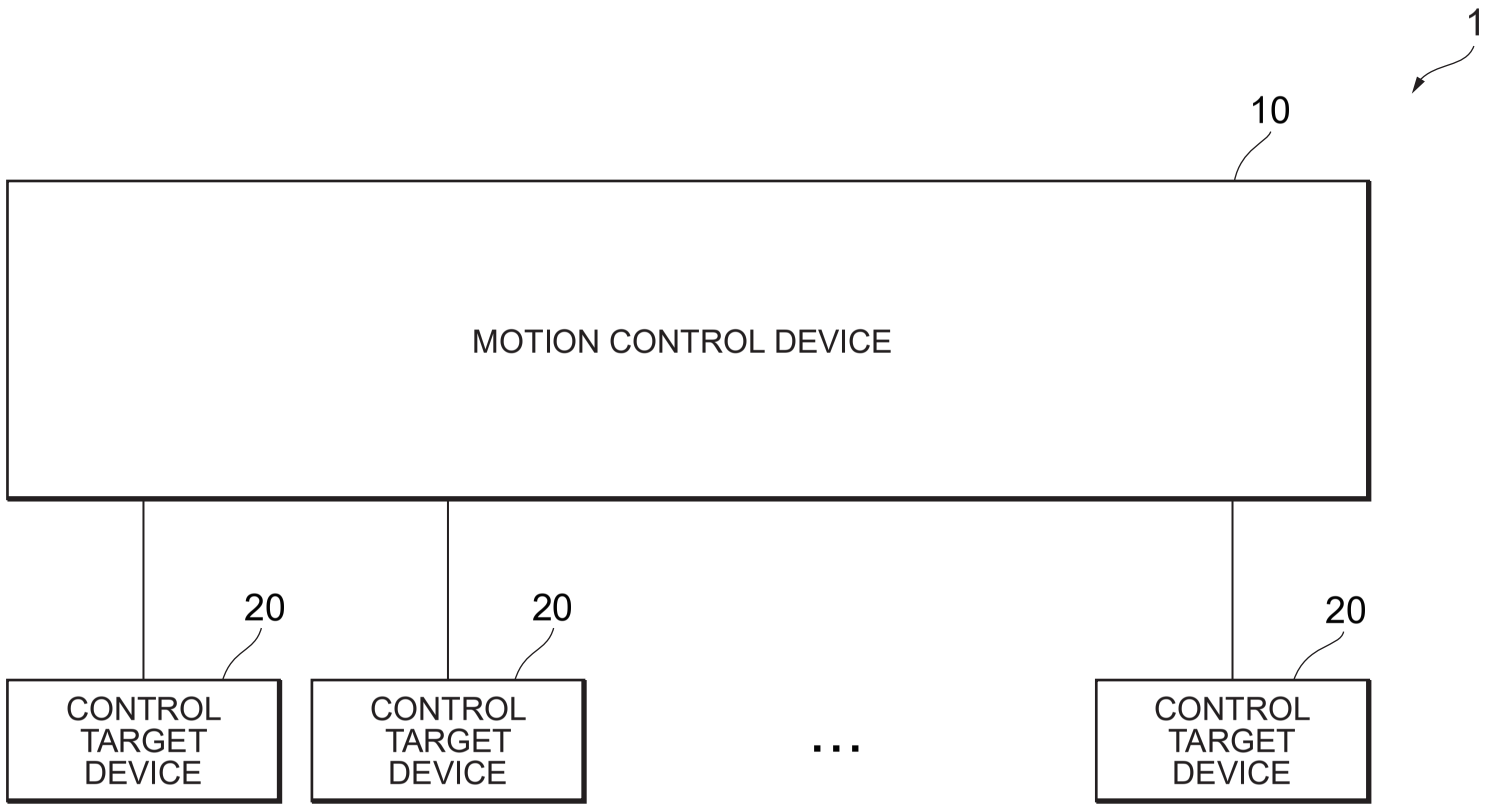
1
10
MOTION CONTROL DEVICE
20
20
20
CONTROL TARGET DEVICE
CONTROL TARGET DEVICE
...
CONTROL TARGET DEVICE

FIG.2

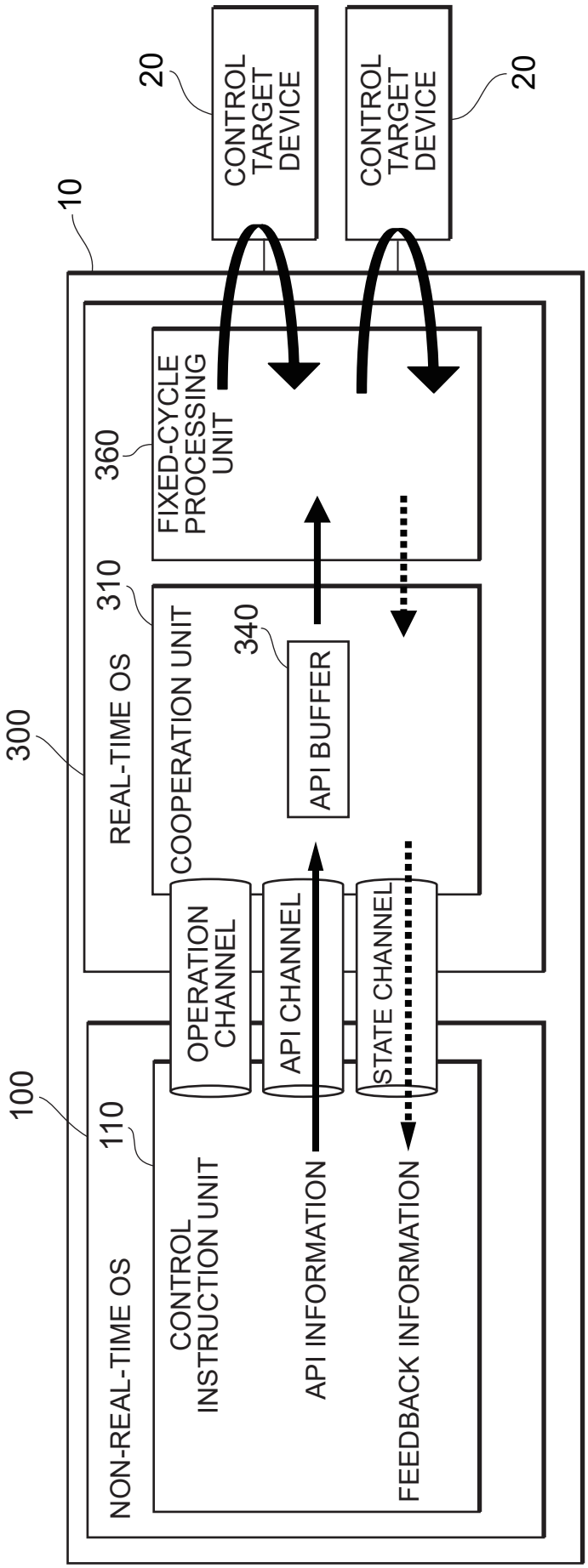
10
20
CONTROL TARGET DEVICE
20
CONTROL TARGET DEVICE
300
REAL-TIME OS
360
FIXED-CYCLE PROCESSING UNIT
310
COOPERATION UNIT
340
API BUFFER
OPERATION CHANNEL
API CHANNEL
STATE CHANNEL
100
NON-REAL-TIME OS
110
CONTROL INSTRUCTION UNIT
API INFORMATION
FEEDBACK INFORMATION

FIG.3

(a)

API CHANNEL

UNDER-RECORDING FLAG
DEVICE IDENTIFIER
MODULE IDENTIFIER
CONTROL COMMAND IDENTIFIER
API BUFFER IDENTIFIER
COMMAND VALUE
EXISTENCE REPORT

(b)

STATE CHANNEL

MODULE IDENTIFIER
ERROR CODE
FEEDBACK INFORMATION

FIG.4

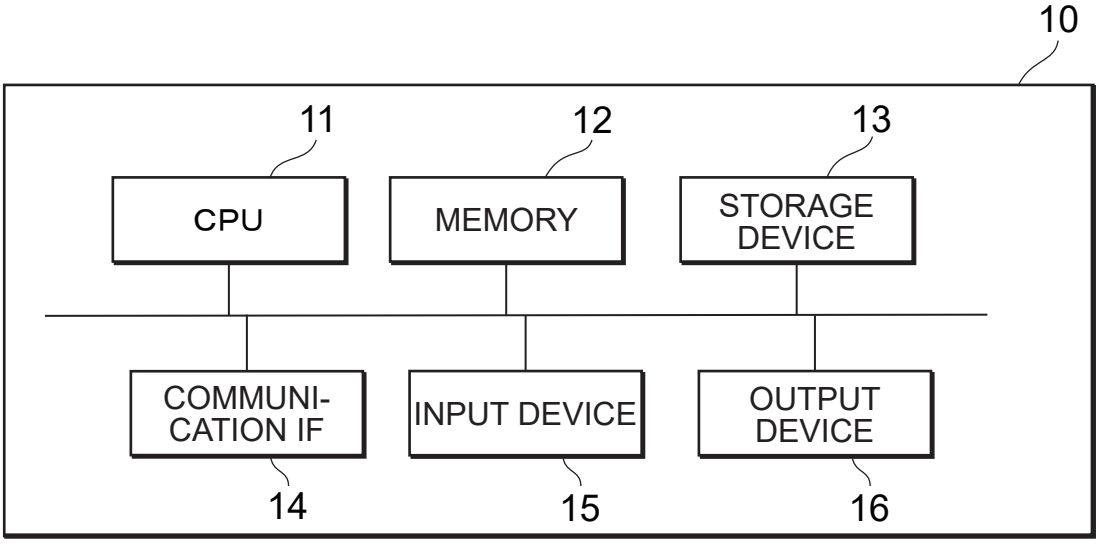
10
11
12
13
CPU
MEMORY
STORAGE DEVICE
COMMUNI-CATION IF
INPUT DEVICE
OUTPUT DEVICE
14
15
16

FIG.5

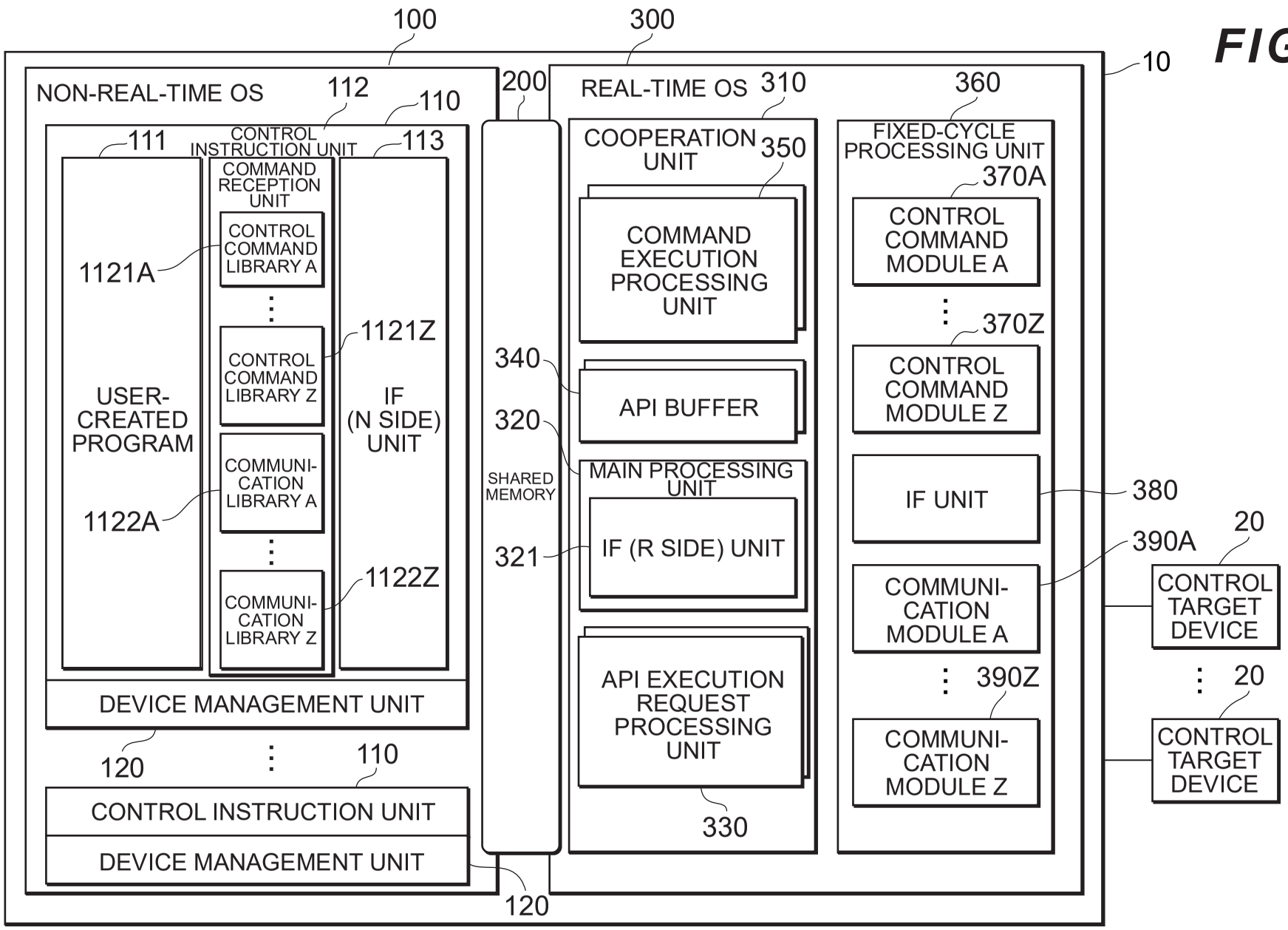
100
300
10
NON-REAL-TIME OS
112
110
200
REAL-TIME OS
310
360
111
CONTROL INSTRUCTION UNIT
113
COMMAND RECEPTION UNIT
COOPERATION UNIT
350
FIXED-CYCLE PROCESSING UNIT
370A
CONTROL COMMAND LIBRARY A
CONTROL COMMAND MODULE A
1121A
1121Z
370Z
CONTROL COMMAND LIBRARY Z
CONTROL COMMAND MODULE Z
340
COMMAND EXECUTION PROCESSING UNIT
API BUFFER
320
USER-CREATED PROGRAM
IF (N SIDE) UNIT
COMMUNI-CATION LIBRARY A
SHARED MEMORY
MAIN PROCESSING UNIT
IF UNIT
380
1122A
321
IF (R SIDE) UNIT
390A
20
CONTROL TARGET DEVICE
1122Z
COMMUNI-CATION LIBRARY Z
COMMUNI-CATION MODULE A
API EXECUTION REQUEST PROCESSING UNIT
390Z
20
CONTROL TARGET DEVICE
DEVICE MANAGEMENT UNIT
120
110
COMMUNI-CATION MODULE Z
330
CONTROL INSTRUCTION UNIT
DEVICE MANAGEMENT UNIT
120

FIG.6

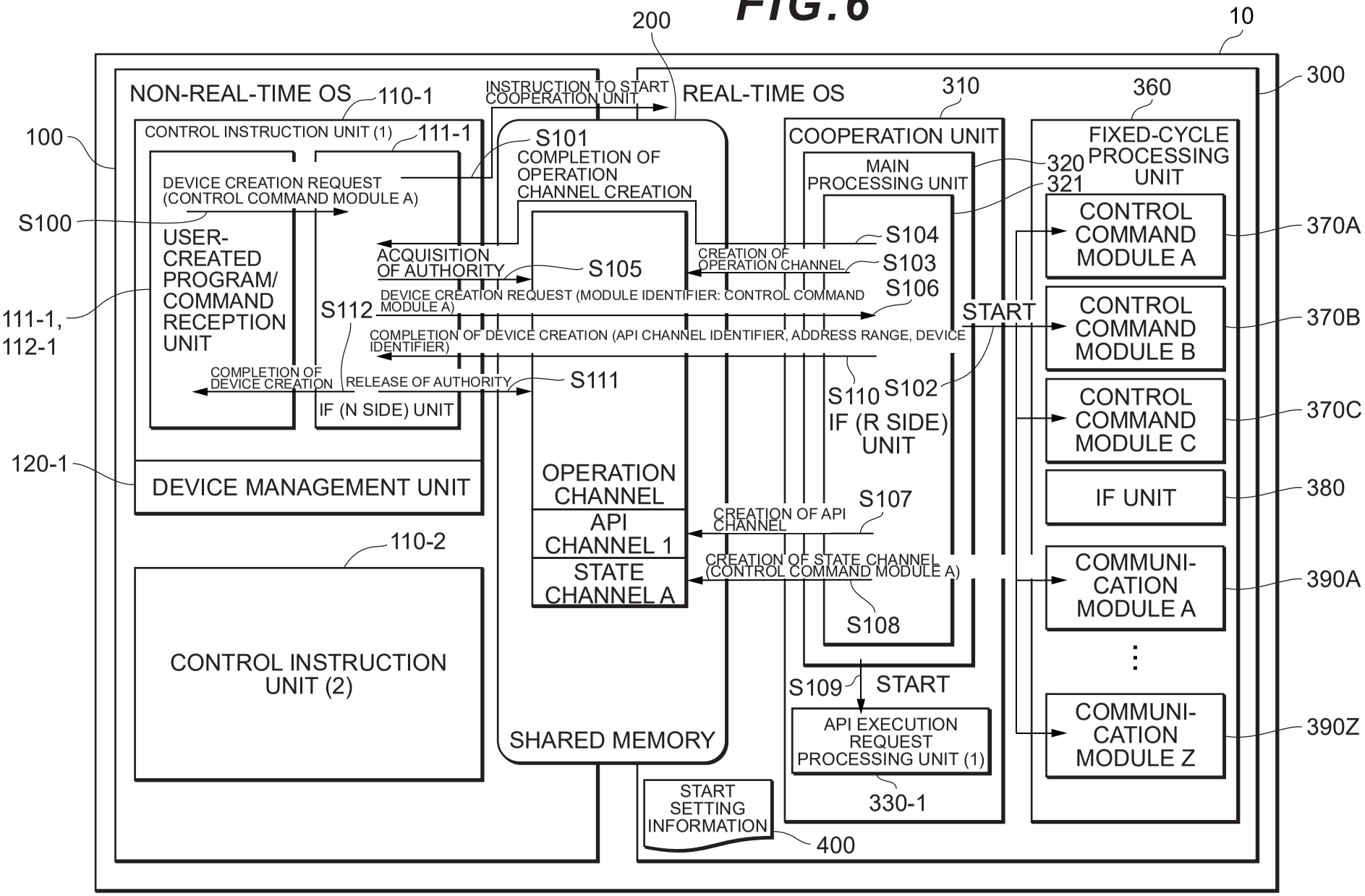
10
200
300
100
NON-REAL-TIME OS
110-1
CONTROL INSTRUCTION UNIT (1)
111-1
DEVICE CREATION REQUEST (CONTROL COMMAND MODULE A)
S100
USER-CREATED PROGRAM/ COMMAND RECEPTION UNIT
111-1, 112-1
S112
IF (N SIDE) UNIT
120-1
DEVICE MANAGEMENT UNIT
110-2
CONTROL INSTRUCTION UNIT (2)
INSTRUCTION TO START COOPERATION UNIT
REAL-TIME OS
S101
COMPLETION OF OPERATION CHANNEL CREATION
ACQUISITION OF AUTHORITY
S105
DEVICE CREATION REQUEST (MODULE IDENTIFIER: CONTROL COMMAND MODULE A)
COMPLETION OF DEVICE CREATION (API CHANNEL IDENTIFIER, ADDRESS RANGE, DEVICE IDENTIFIER)
COMPLETION OF DEVICE CREATION
RELEASE OF AUTHORITY
S111
OPERATION CHANNEL
API CHANNEL 1
STATE CHANNEL A
SHARED MEMORY
START SETTING INFORMATION
400
310
COOPERATION UNIT
MAIN PROCESSING UNIT
320
321
CREATION OF OPERATION CHANNEL
S104
S103
S106
S110
S102
IF (R SIDE) UNIT
START
CREATION OF API CHANNEL
S107
CREATION OF STATE CHANNEL (CONTROL COMMAND MODULE A)
S108
S109
START
API EXECUTION REQUEST PROCESSING UNIT (1)
330-1
360
FIXED-CYCLE PROCESSING UNIT
CONTROL COMMAND MODULE A
370A
CONTROL COMMAND MODULE B
370B
CONTROL COMMAND MODULE C
370C
IF UNIT
380
COMMUNI-CATION MODULE A
390A
COMMUNI-CATION MODULE Z
390Z

FIG.7

(a) DEVICE MANAGEMENT INFORMATION (CONTROL INSTRUCTION UNIT (1))

DEVICE IDENTIFIER	API CHANNEL IDENTIFIER
D1	API CHANNEL 1

(b) DEVICE MANAGEMENT INFORMATION (IF (R SIDE) UNIT)

DEVICE IDENTIFIER	API CHANNEL IDENTIFIER
D1	API CHANNEL 1

(c) STATE CHANNEL MANAGEMENT INFORMATION (IF (R SIDE) UNIT)

STATE CHANNEL IDENTIFIER	MODULE IDENTIFIER
STATE CHANNEL A	CONTROL COMMAND MODULE A

(d) ADDRESS MANAGEMENT INFORMATION (IF (N SIDE) UNIT OF CONTROL INSTRUCTION UNIT (1))

CHANNEL IDENTIFIER	ADDRESS RANGE OF SHARED MEMORY
OPERATION CHANNEL	xxx～xxx
API CHANNEL 1	xxx～xxx
STATE CHANNEL A	xxx～xxx

(e) ADDRESS MANAGEMENT INFORMATION (IF (R SIDE) UNIT)

CHANNEL IDENTIFIER	ADDRESS RANGE OF SHARED MEMORY
OPERATION CHANNEL	xxx～xxx
API CHANNEL 1	xxx～xxx
STATE CHANNEL A	xxx～xxx

FIG. 8

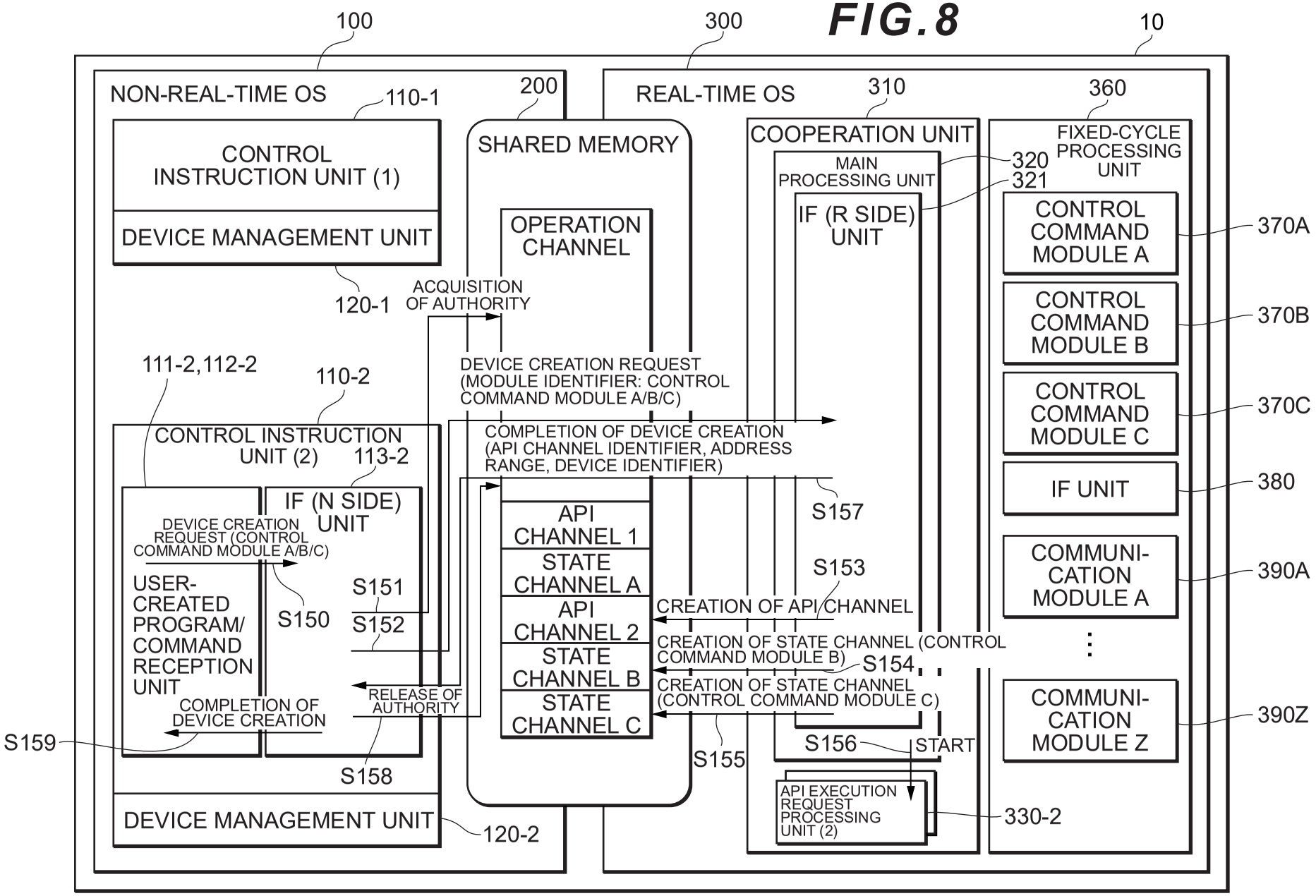
100
300
10
NON-REAL-TIME OS
110-1
200
REAL-TIME OS
310
360
CONTROL INSTRUCTION UNIT (1)
DEVICE MANAGEMENT UNIT
SHARED MEMORY
OPERATION CHANNEL
COOPERATION UNIT
MAIN PROCESSING UNIT
320
321
IF (R SIDE) UNIT
FIXED-CYCLE PROCESSING UNIT
CONTROL COMMAND MODULE A
370A
CONTROL COMMAND MODULE B
370B
CONTROL COMMAND MODULE C
370C
IF UNIT
380
COMMUNI-CATION MODULE A
390A
COMMUNI-CATION MODULE Z
390Z
120-1
ACQUISITION OF AUTHORITY
111-2,112-2
110-2
DEVICE CREATION REQUEST (MODULE IDENTIFIER: CONTROL COMMAND MODULE A/B/C)
COMPLETION OF DEVICE CREATION (API CHANNEL IDENTIFIER, ADDRESS RANGE, DEVICE IDENTIFIER)
CONTROL INSTRUCTION UNIT (2)
113-2
IF (N SIDE) UNIT
S157
DEVICE CREATION REQUEST (CONTROL COMMAND MODULE A/B/C)
USER-CREATED PROGRAM/ COMMAND RECEPTION UNIT
S150
S151
S152
API CHANNEL 1
STATE CHANNEL A
API CHANNEL 2
STATE CHANNEL B
STATE CHANNEL C
S153
CREATION OF API CHANNEL
CREATION OF STATE CHANNEL (CONTROL COMMAND MODULE B)
S154
CREATION OF STATE CHANNEL (CONTROL COMMAND MODULE C)
RELEASE OF AUTHORITY
COMPLETION OF DEVICE CREATION
S159
S158
S155
S156
START
API EXECUTION REQUEST PROCESSING UNIT (2)
330-2
DEVICE MANAGEMENT UNIT
120-2

FIG.9

(a) DEVICE MANAGEMENT INFORMATION (CONTROL INSTRUCTION UNIT (2))

DEVICE IDENTIFIER	API CHANNEL IDENTIFIER
D2	API CHANNEL 2

(b) DEVICE MANAGEMENT INFORMATION (IF (R SIDE) UNIT)

DEVICE IDENTIFIER	API CHANNEL IDENTIFIER
D1	API CHANNEL 1
D2	API CHANNEL 2

(c) STATE CHANNEL MANAGEMENT INFORMATION (IF (R SIDE) UNIT)

STATE CHANNEL IDENTIFIER	MODULE IDENTIFIER
STATE CHANNEL A	CONTROL COMMAND MODULE A
STATE CHANNEL B	CONTROL COMMAND MODULE B
STATE CHANNEL C	CONTROL COMMAND MODULE C

(d) ADDRESS MANAGEMENT INFORMATION (IF (N SIDE) UNIT OF CONTROL INSTRUCTION UNIT (2))

CHANNEL IDENTIFIER	ADDRESS RANGE OF SHARED MEMORY
CHANNEL IDENTIFIER	xxx～xxx
API CHANNEL 2	xxx～xxx
STATE CHANNEL A	xxx～xxx
STATE CHANNEL B	xxx～xxx
STATE CHANNEL C	xxx～xxx

(e) ADDRESS MANAGEMENT INFORMATION (IF (R SIDE) UNIT)

CHANNEL IDENTIFIER	ADDRESS RANGE OF SHARED MEMORY
CHANNEL IDENTIFIER	xxx～xxx
API CHANNEL 1	xxx～xxx
STATE CHANNEL A	xxx～xxx
API CHANNEL 2	xxx～xxx
STATE CHANNEL B	xxx～xxx
STATE CHANNEL C	xxx～xxx

FIG.10

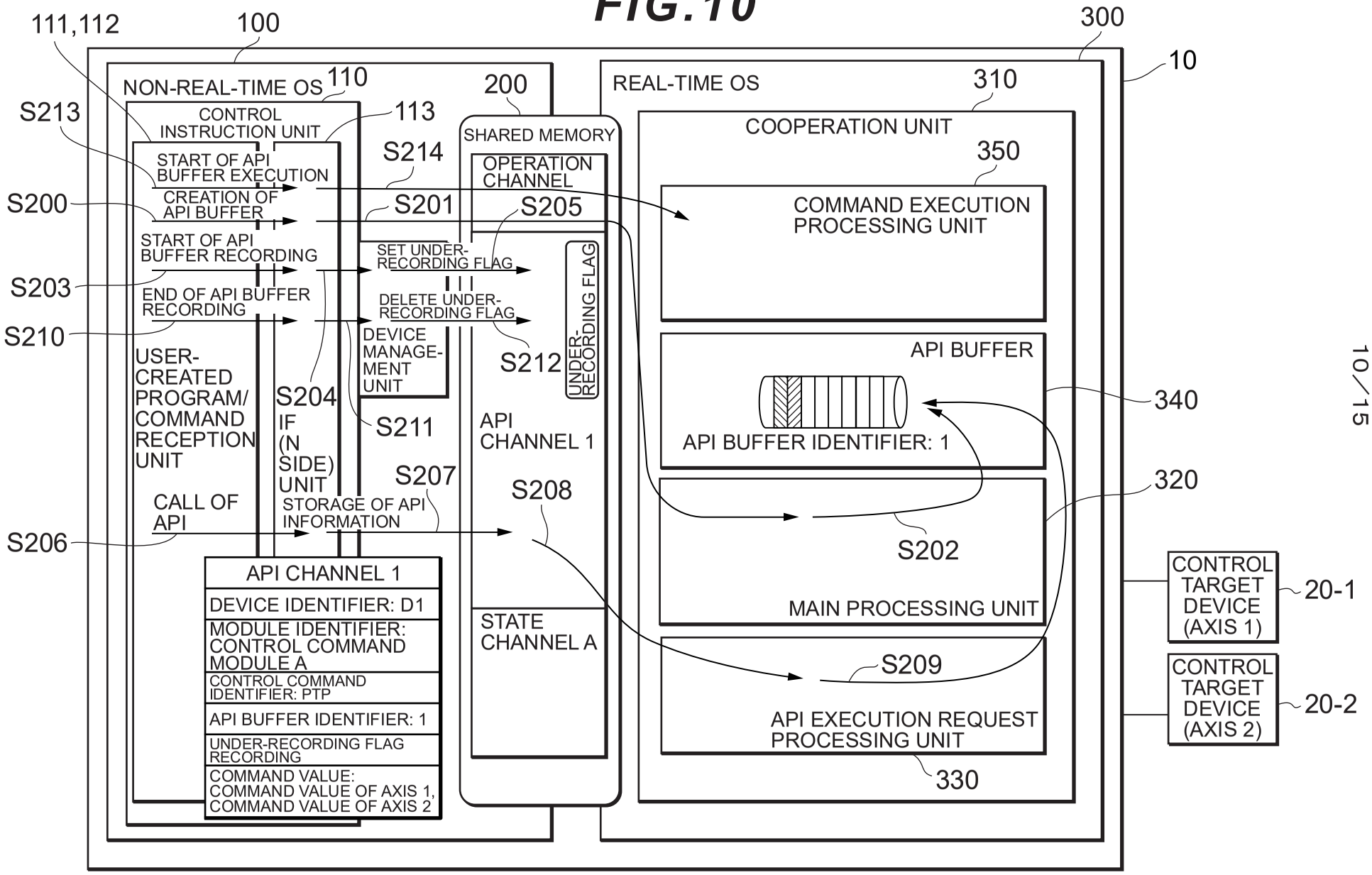
111,112
100
300
10
NON-REAL-TIME OS
110
200
REAL-TIME OS
310
S213
CONTROL INSTRUCTION UNIT
113
SHARED MEMORY
COOPERATION UNIT
S214
OPERATION CHANNEL
350
START OF API BUFFER EXECUTION
S200
CREATION OF API BUFFER
S201
S205
COMMAND EXECUTION PROCESSING UNIT
START OF API BUFFER RECORDING
SET UNDER-RECORDING FLAG
S203
END OF API BUFFER RECORDING
DELETE UNDER-RECORDING FLAG
UNDER-RECORDING FLAG
S210
DEVICE MANAGE-MENT UNIT
S212
API BUFFER
USER-CREATED PROGRAM/ COMMAND RECEPTION UNIT
S204
IF (N SIDE) UNIT
S211
API CHANNEL 1
340
API BUFFER IDENTIFIER: 1
S207
S208
320
CALL OF API
STORAGE OF API INFORMATION
S206
S202
API CHANNEL 1
DEVICE IDENTIFIER: D1
MODULE IDENTIFIER: CONTROL COMMAND MODULE A
CONTROL COMMAND IDENTIFIER: PTP
API BUFFER IDENTIFIER: 1
UNDER-RECORDING FLAG RECORDING
COMMAND VALUE: COMMAND VALUE OF AXIS 1, COMMAND VALUE OF AXIS 2
STATE CHANNEL A
MAIN PROCESSING UNIT
CONTROL TARGET DEVICE (AXIS 1)
20-1
S209
CONTROL TARGET DEVICE (AXIS 2)
20-2
API EXECUTION REQUEST PROCESSING UNIT
330

FIG.11

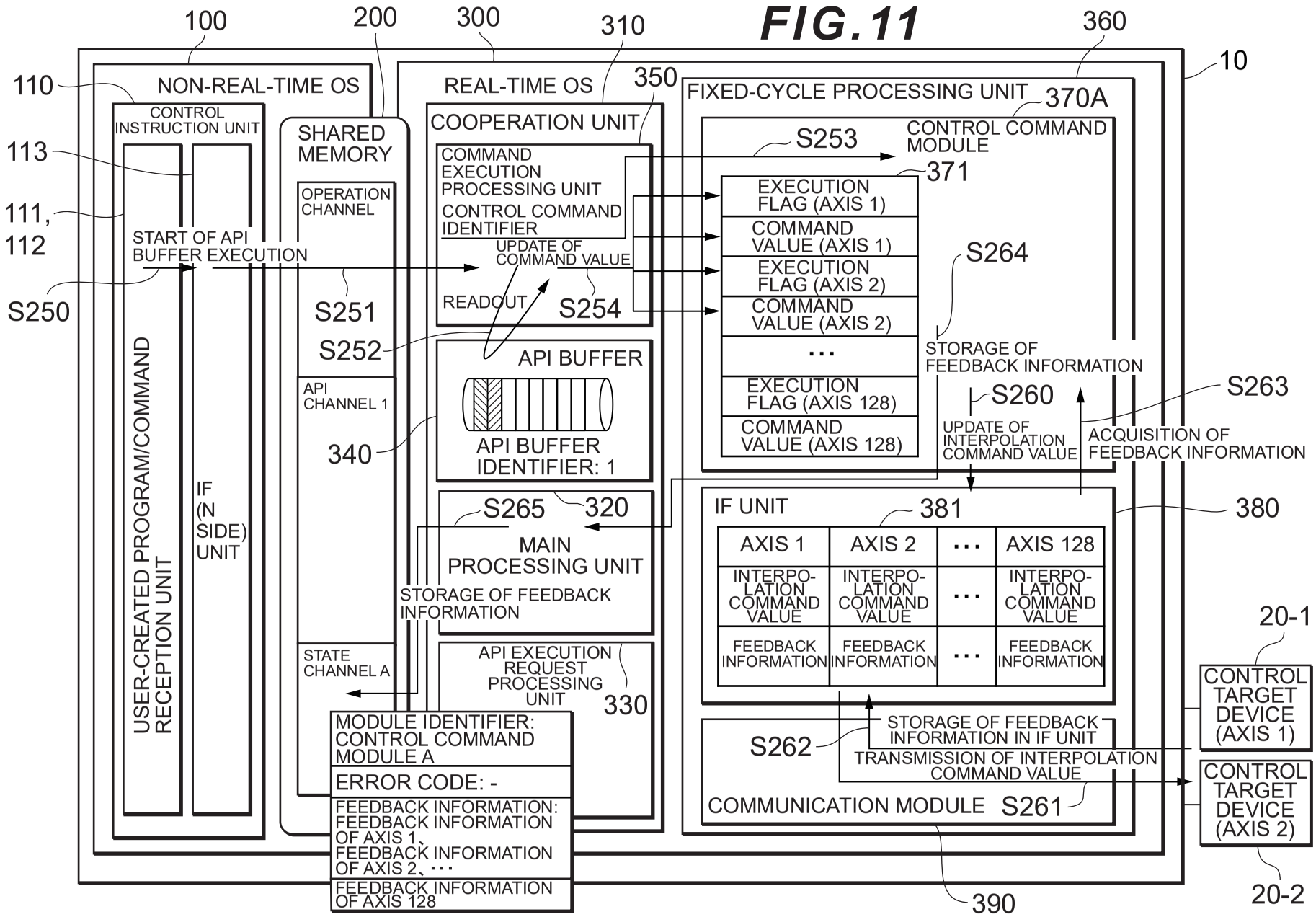
100
200
300
310
360
10
110
NON-REAL-TIME OS
REAL-TIME OS
350
FIXED-CYCLE PROCESSING UNIT
370A
CONTROL INSTRUCTION UNIT
SHARED MEMORY
COOPERATION UNIT
CONTROL COMMAND MODULE
113
S253
371
COMMAND EXECUTION PROCESSING UNIT
CONTROL COMMAND IDENTIFIER
EXECUTION FLAG (AXIS 1)
COMMAND VALUE (AXIS 1)
EXECUTION FLAG (AXIS 2)
COMMAND VALUE (AXIS 2)
111, 112
OPERATION CHANNEL
START OF API BUFFER EXECUTION
UPDATE OF COMMAND VALUE
S264
S250
S251
READOUT
S254
S252
API BUFFER
STORAGE OF FEEDBACK INFORMATION
API CHANNEL 1
EXECUTION FLAG (AXIS 128)
S260
S263
COMMAND VALUE (AXIS 128)
UPDATE OF INTERPOLATION COMMAND VALUE
ACQUISITION OF FEEDBACK INFORMATION
340
API BUFFER IDENTIFIER: 1
IF UNIT
381
380
S265
320
MAIN PROCESSING UNIT
AXIS 1
AXIS 2
AXIS 128
INTERPO-LATION COMMAND VALUE
STORAGE OF FEEDBACK INFORMATION
20-1
STATE CHANNEL A
API EXECUTION REQUEST PROCESSING UNIT
330
FEEDBACK INFORMATION
CONTROL TARGET DEVICE (AXIS 1)
USER-CREATED PROGRAM/COMMAND RECEPTION UNIT
IF (N SIDE) UNIT
MODULE IDENTIFIER: CONTROL COMMAND MODULE A
S262
STORAGE OF FEEDBACK INFORMATION IN IF UNIT
TRANSMISSION OF INTERPOLATION COMMAND VALUE
ERROR CODE: -
CONTROL TARGET DEVICE (AXIS 2)
FEEDBACK INFORMATION: FEEDBACK INFORMATION OF AXIS 1、FEEDBACK INFORMATION OF AXIS 2、･･･
COMMUNICATION MODULE
S261
FEEDBACK INFORMATION OF AXIS 128
390
20-2

FIG.12

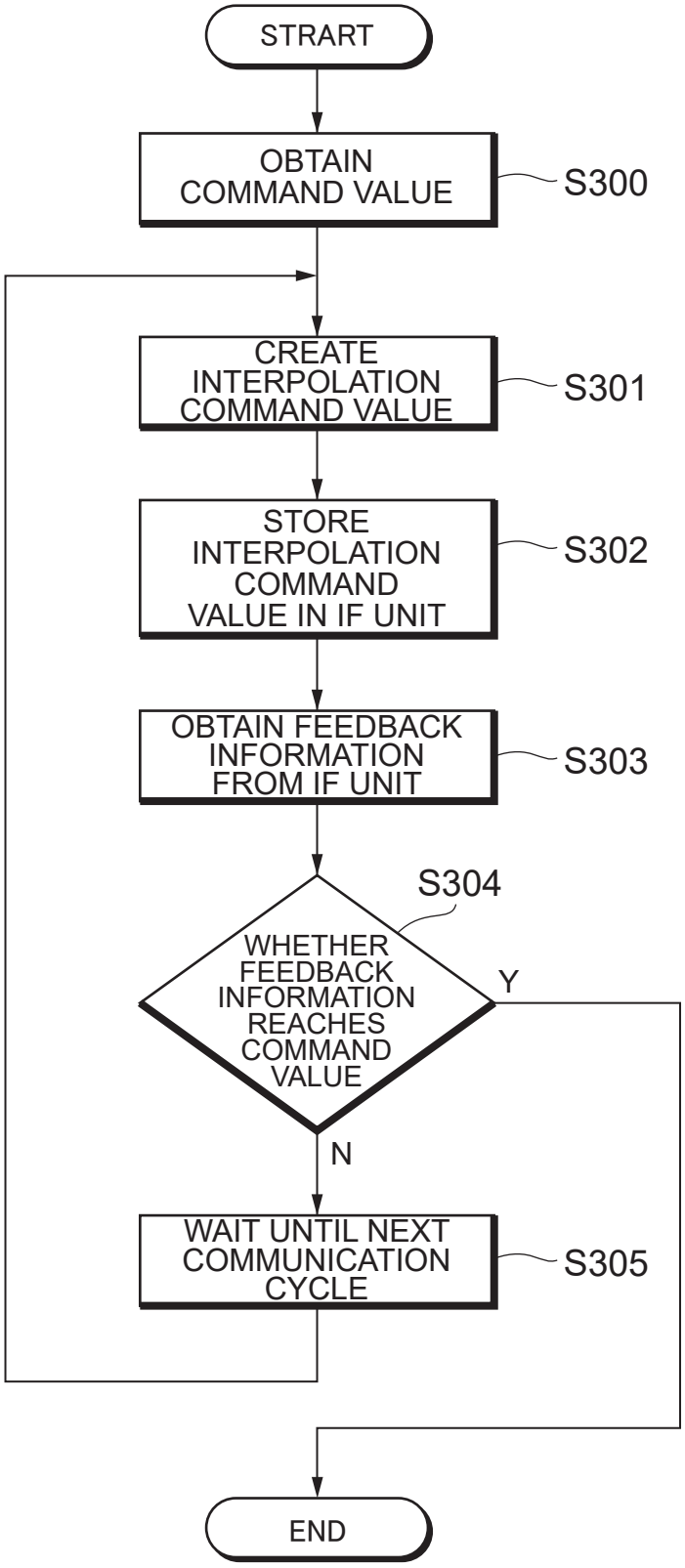
STRART
OBTAIN COMMAND VALUE
S300
CREATE INTERPOLATION COMMAND VALUE
S301
STORE INTERPOLATION COMMAND VALUE IN IF UNIT
S302
OBTAIN FEEDBACK INFORMATION FROM IF UNIT
S303
S304
WHETHER FEEDBACK INFORMATION REACHES COMMAND VALUE
Y
N
WAIT UNTIL NEXT COMMUNICATION CYCLE
S305
END

FIG.13

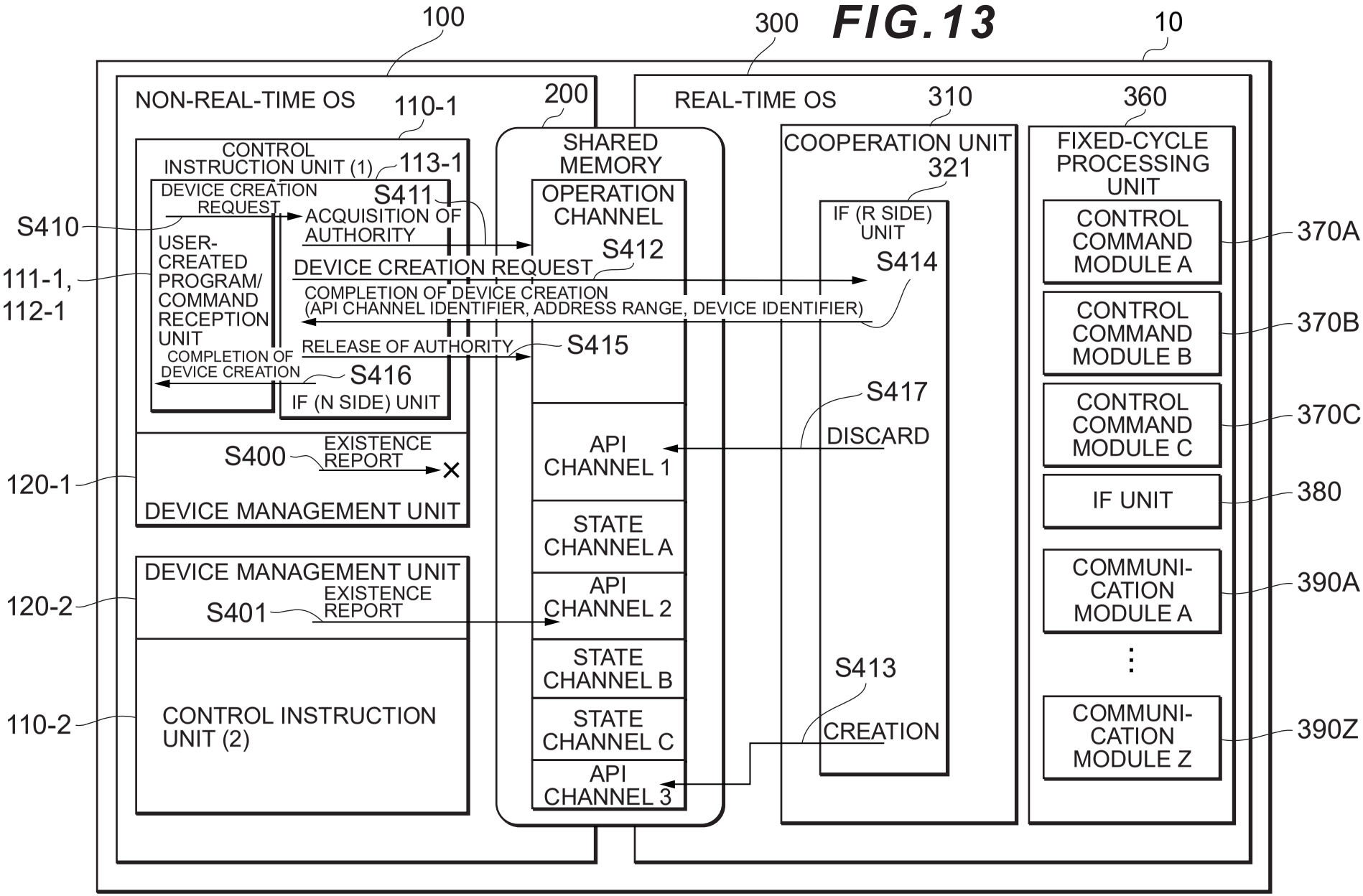
100
300
10
NON-REAL-TIME OS
110-1
200
REAL-TIME OS
310
360
CONTROL INSTRUCTION UNIT (1)
113-1
SHARED MEMORY
COOPERATION UNIT
321
FIXED-CYCLE PROCESSING UNIT
DEVICE CREATION REQUEST
S411
OPERATION CHANNEL
IF (R SIDE) UNIT
CONTROL COMMAND MODULE A
S410
ACQUISITION OF AUTHORITY
370A
S412
S414
USER-CREATED PROGRAM/ COMMAND RECEPTION UNIT
111-1, 112-1
DEVICE CREATION REQUEST
COMPLETION OF DEVICE CREATION (API CHANNEL IDENTIFIER, ADDRESS RANGE, DEVICE IDENTIFIER)
CONTROL COMMAND MODULE B
370B
RELEASE OF AUTHORITY
S415
COMPLETION OF DEVICE CREATION
S416
IF (N SIDE) UNIT
S417
CONTROL COMMAND MODULE C
370C
DISCARD
API CHANNEL 1
S400
EXISTENCE REPORT
×
120-1
DEVICE MANAGEMENT UNIT
IF UNIT
380
STATE CHANNEL A
DEVICE MANAGEMENT UNIT
120-2
S401
EXISTENCE REPORT
API CHANNEL 2
COMMUNI-CATION MODULE A
390A
STATE CHANNEL B
S413
110-2
CONTROL INSTRUCTION UNIT (2)
STATE CHANNEL C
CREATION
COMMUNI-CATION MODULE Z
390Z
API CHANNEL 3

FIG.14

MAPPING INFORMATION

AXIS	COMMUNICATION MODULE	SLAVE NUMBER
AXIS 1	COMMUNICATION MODULE (EtherCAT)	1
AXIS 2	COMMUNICATION MODULE (EtherCAT)	2
AXIS 3	COMMUNICATION MODULE (RTEX)	1
...	...	...

FIG.15

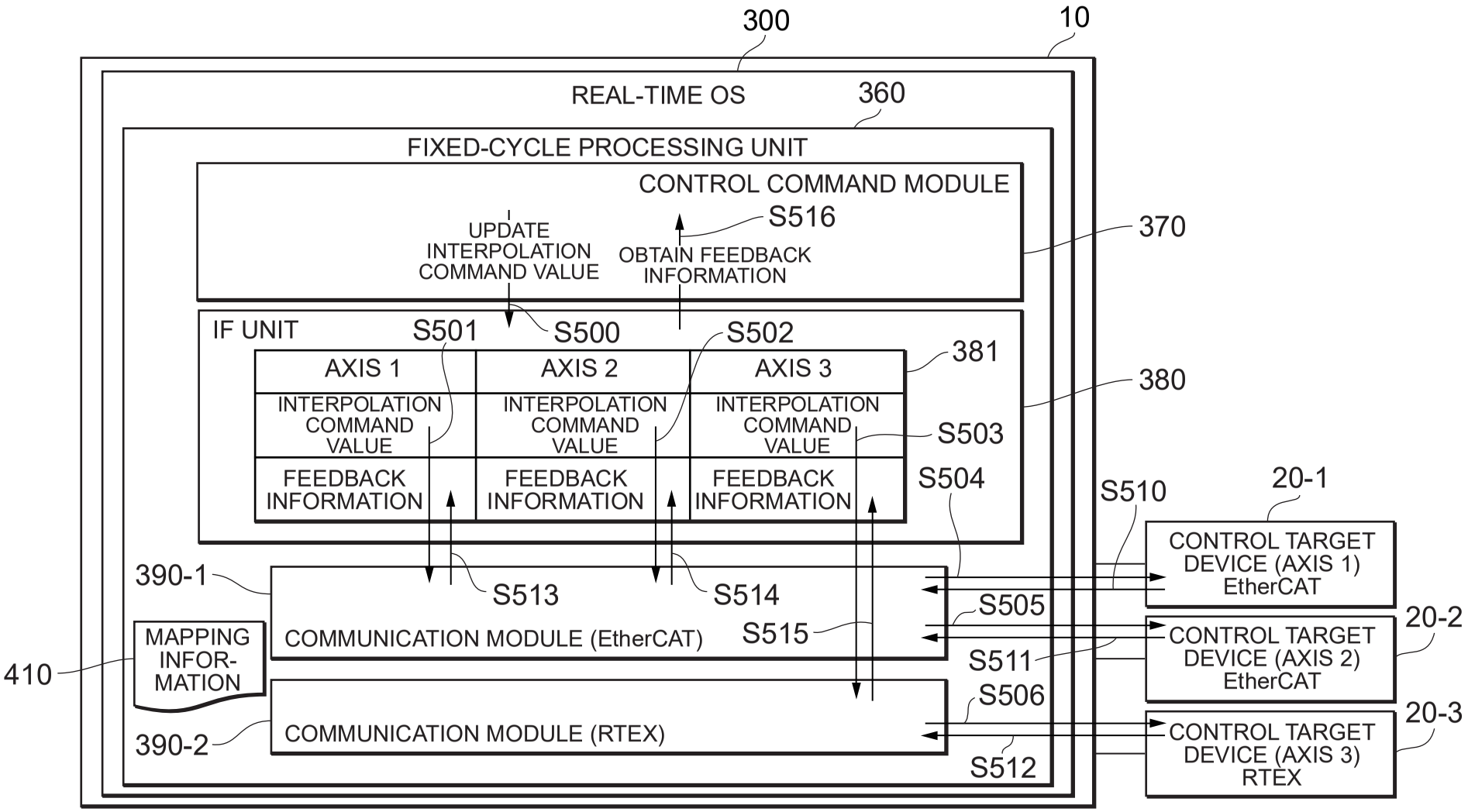
300
10
REAL-TIME OS
360
FIXED-CYCLE PROCESSING UNIT
CONTROL COMMAND MODULE
S516
370
UPDATE INTERPOLATION COMMAND VALUE
OBTAIN FEEDBACK INFORMATION
IF UNIT
S501
S500
S502
381
380
AXIS 1
AXIS 2
AXIS 3
INTERPOLATION COMMAND VALUE
INTERPOLATION COMMAND VALUE
INTERPOLATION COMMAND VALUE
S503
FEEDBACK INFORMATION
FEEDBACK INFORMATION
FEEDBACK INFORMATION
S504
S510
20-1
390-1
S513
S514
S505
CONTROL TARGET DEVICE (AXIS 1) EtherCAT
MAPPING INFOR-MATION
COMMUNICATION MODULE (EtherCAT)
S515
20-2
410
S511
CONTROL TARGET DEVICE (AXIS 2) EtherCAT
S506
20-3
390-2
COMMUNICATION MODULE (RTEX)
CONTROL TARGET DEVICE (AXIS 3) RTEX
S512