(12) INTERNATIONAL APPLICATION PUBLISHED UNDER THE PATENT COOPERATION TREATY (PCT)

(19) World Intellectual Property Organization
International Bureau

(43) International Publication Date
16 October 2008 (16.10.2008)

PCT

(10) International Publication Number
WO 2008/123971 A1

(51) International Patent Classification:
C21C 7/00 (2006.01) *C21C 5/04* (2006.01)

(21) International Application Number:
PCT/US2008/004222

(22) International Filing Date: 1 April 2008 (01.04.2008)

(25) Filing Language: English

(26) Publication Language: English

(30) Priority Data:
11/731,969 2 April 2007 (02.04.2007) US

(71) Applicant *(for all designated States except US)*: **SPECIALTY MINERALS (MICHIGAN) INC.** [US/US]; 30600 Telegraph Road, Bingham Farms, MI 48025 (US).

(72) Inventors; and

(75) Inventors/Applicants *(for US only)*: **COLAVITO, Dominick, M.** [US/US]; 50 Beechwood Court, Bangor, PA 18013 (US). **DAMIANO, John** [US/US]; 1135E W. Lafayette Street, Easton, PA 18042 (US). **VERMEULEN, Yves, C.** [BE/US]; 807 Birch Avenue, Pen Argyl, PA 18072 (US).

(74) Agent: **JESSEN, Derek, S.**; Minerals Technologies Inc., 1 Highland Avenue, Bethlehem, PA 18017 (US).

(81) Designated States *(unless otherwise indicated, for every kind of national protection available)*: AE, AG, AL, AM, AO, AT, AU, AZ, BA, BB, BG, BH, BR, BW, BY, BZ, CA, CH, CN, CO, CR, CU, CZ, DE, DK, DM, DO, DZ, EC, EE, EG, ES, FI, GB, GD, GE, GH, GM, GT, HN, HR, HU, ID, IL, IN, IS, JP, KE, KG, KM, KN, KP, KR, KZ, LA, LC, LK, LR, LS, LT, LU, LY, MA, MD, ME, MG, MK, MN, MW, MX, MY, MZ, NA, NG, NI, NO, NZ, OM, PG, PH, PL, PT, RO, RS, RU, SC, SD, SE, SG, SK, SL, SM, SV, SY, TJ, TM, TN, TR, TT, TZ, UA, UG, US, UZ, VC, VN, ZA, ZM, ZW.

(84) Designated States *(unless otherwise indicated, for every kind of regional protection available)*: ARIPO (BW, GH, GM, KE, LS, MW, MZ, NA, SD, SL, SZ, TZ, UG, ZM, ZW), Eurasian (AM, AZ, BY, KG, KZ, MD, RU, TJ, TM), European (AT, BE, BG, CH, CY, CZ, DE, DK, EE, ES, FI, FR, GB, GR, HR, HU, IE, IS, IT, LT, LU, LV, MC, MT, NL,

[Continued on next page]

(54) Title: WIRE INJECTION LANCE NOZZLE INSERT

FIG. 3

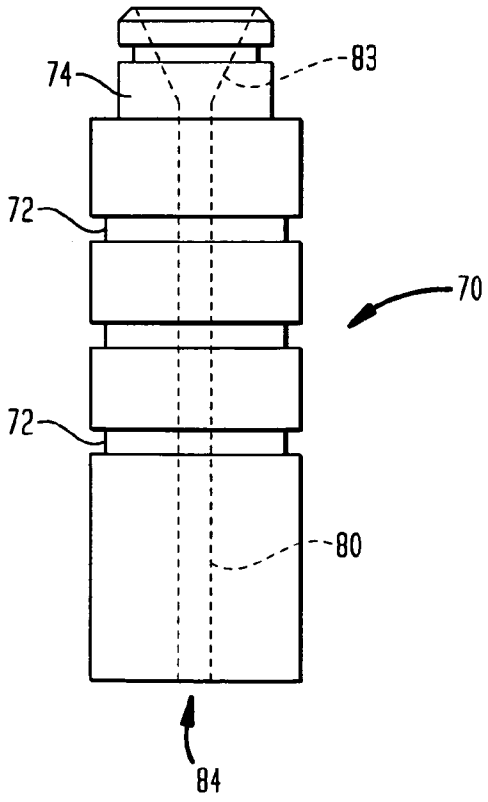

(57) Abstract: A lance nozzle insert for a refractory lance for feeding an additive wire into a quantity of molten metal below the surface of the molten metal surface is made of a material comprising stabilized zirconium oxide and graphite substantially increasing the corrosion resistance of the lance nozzle insert.

WO 2008/123971 A1

NO, PL, PT, RO, SE, SI, SK, TR), OAPI (BF, BJ, CF, CG, CI, CM, GA, GN, GQ, GW, ML, MR, NE, SN, TD, TG).

Published:
— *with international search report*