FIG. 1

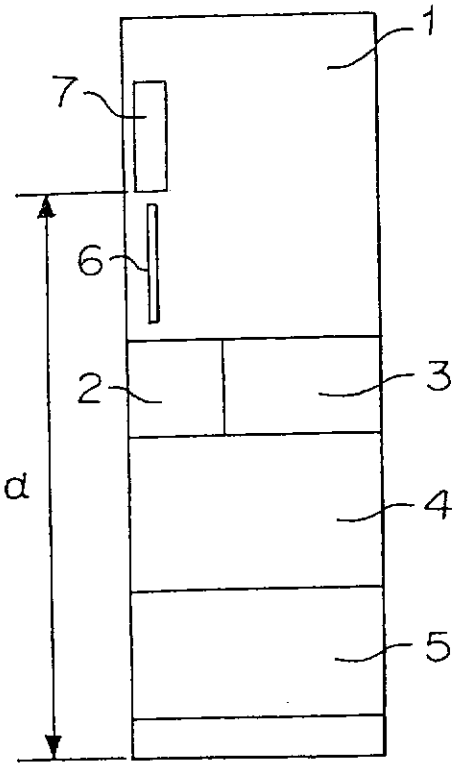

FIG. 2

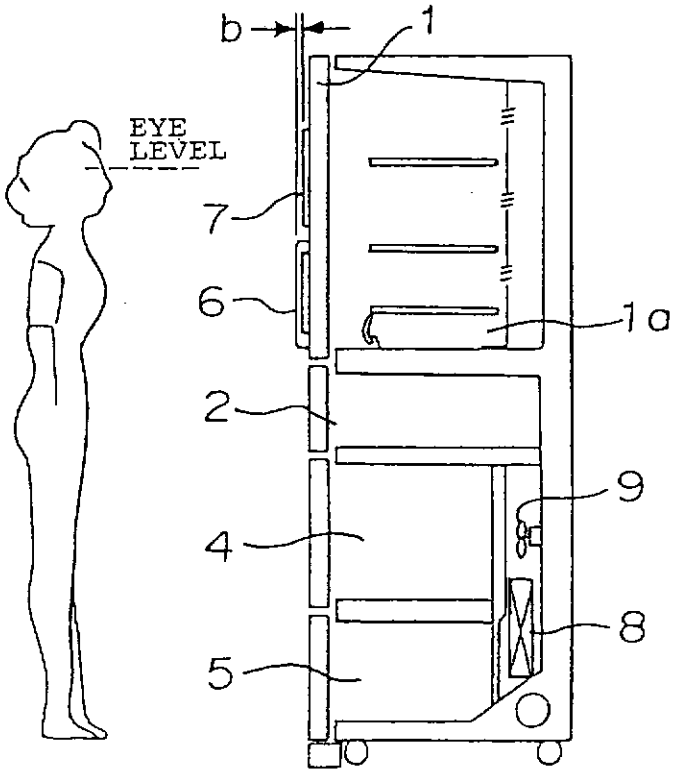

FIG. 3

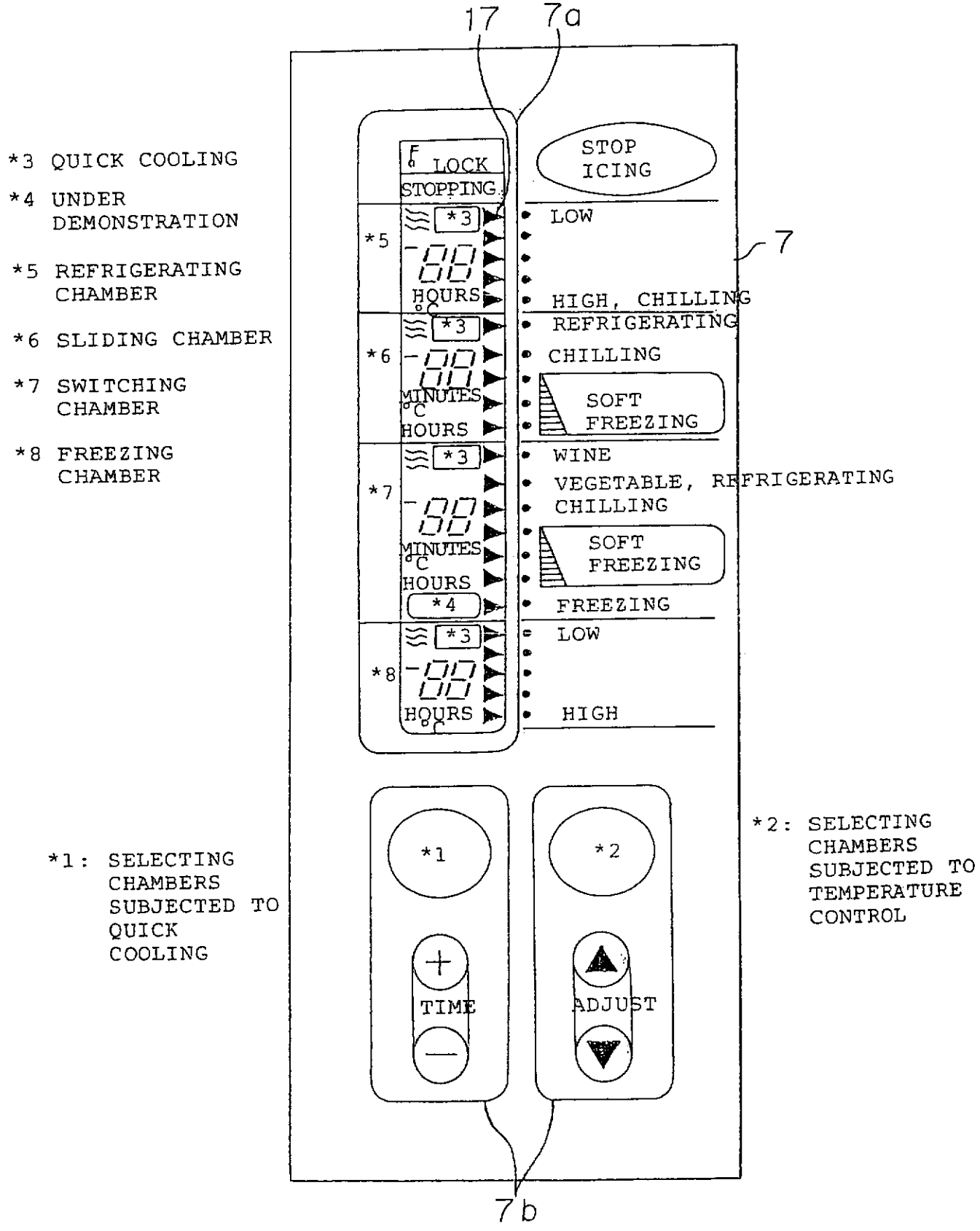

*3 QUICK COOLING

*4 UNDER DEMONSTRATION

*5 REFRIGERATING CHAMBER

*6 SLIDING CHAMBER

*7 SWITCHING CHAMBER

*8 FREEZING CHAMBER

*1: SELECTING CHAMBERS SUBJECTED TO QUICK COOLING

*2: SELECTING CHAMBERS SUBJECTED TO TEMPERATURE CONTROL

FIG. 4

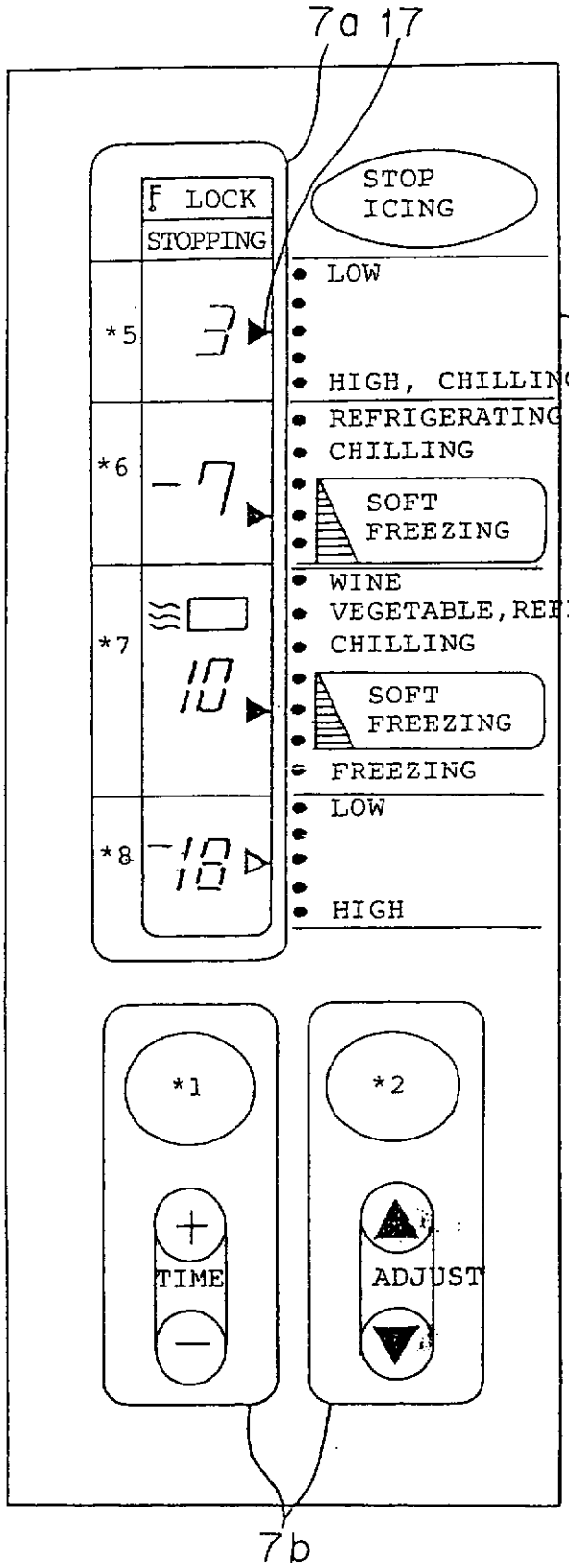

*5 REFRIGERATING CHAMBER

*6 SLIDING CHAMBER

*7 SWITCHING CHAMBER

*8 FREEZING CHAMBER

*1: SELECTING CHEMBERS SUBJECTED TO QUICK COOLING

*2: SELECTING CHEMBERS SUBJECTED TO TEMPERATURE CONTROL

FIG. 5a

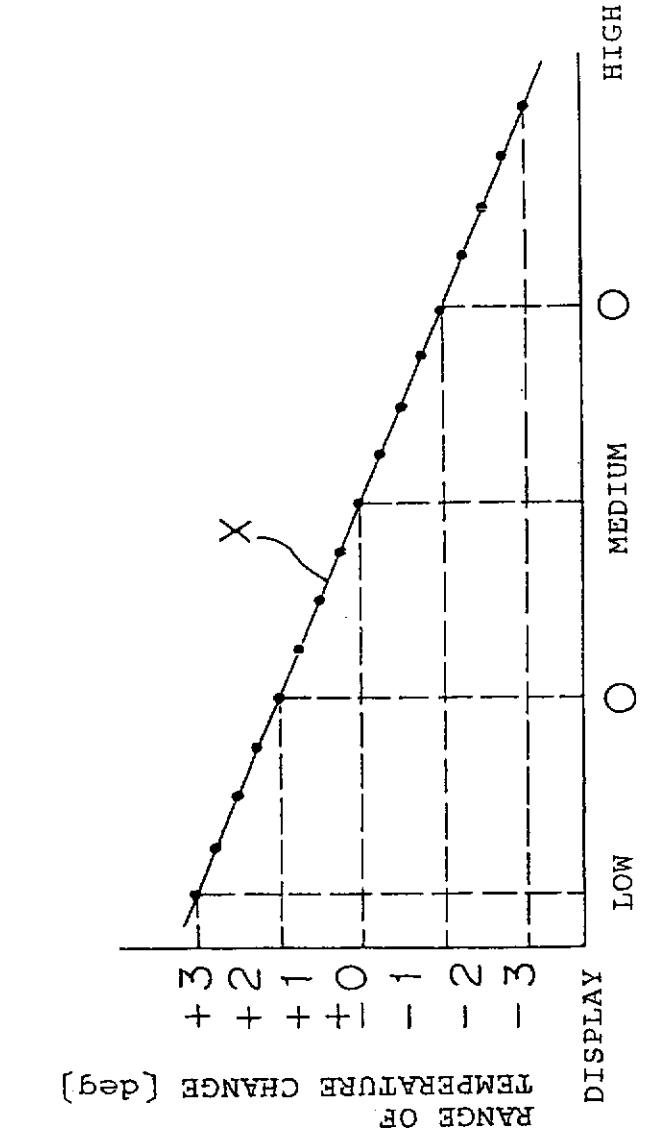
RANGE OF TEMPERATURE CHANGE [deg]
+3
+2
+1
0
-1
-2
-3
DISPLAY
LOW
MEDIUM
HIGH
X

FIG. 5b

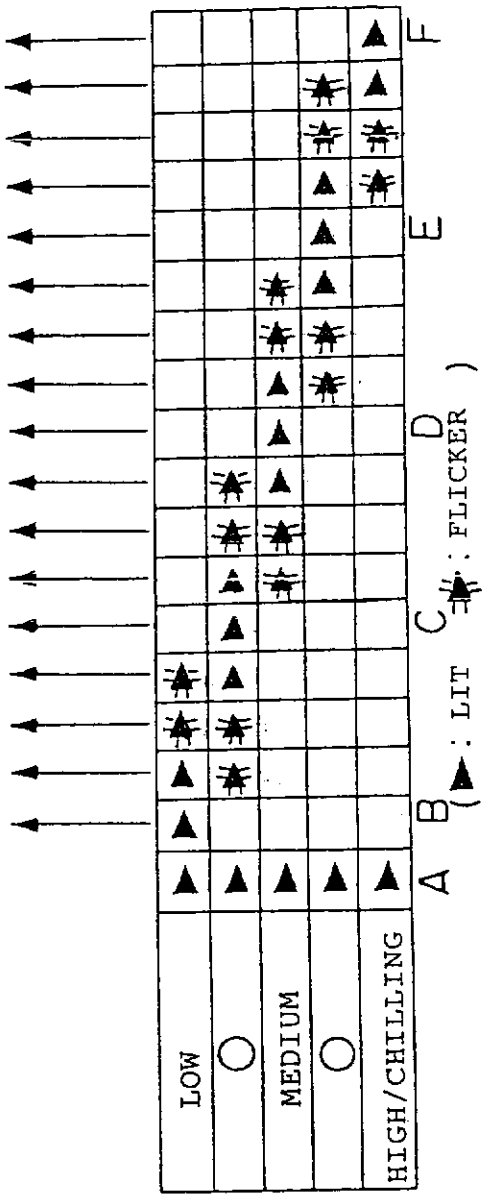
LOW
MEDIUM
HIGH/CHILLING
A
B
C
D
E
F
(: LIT : FLICKER)

FIG. 6

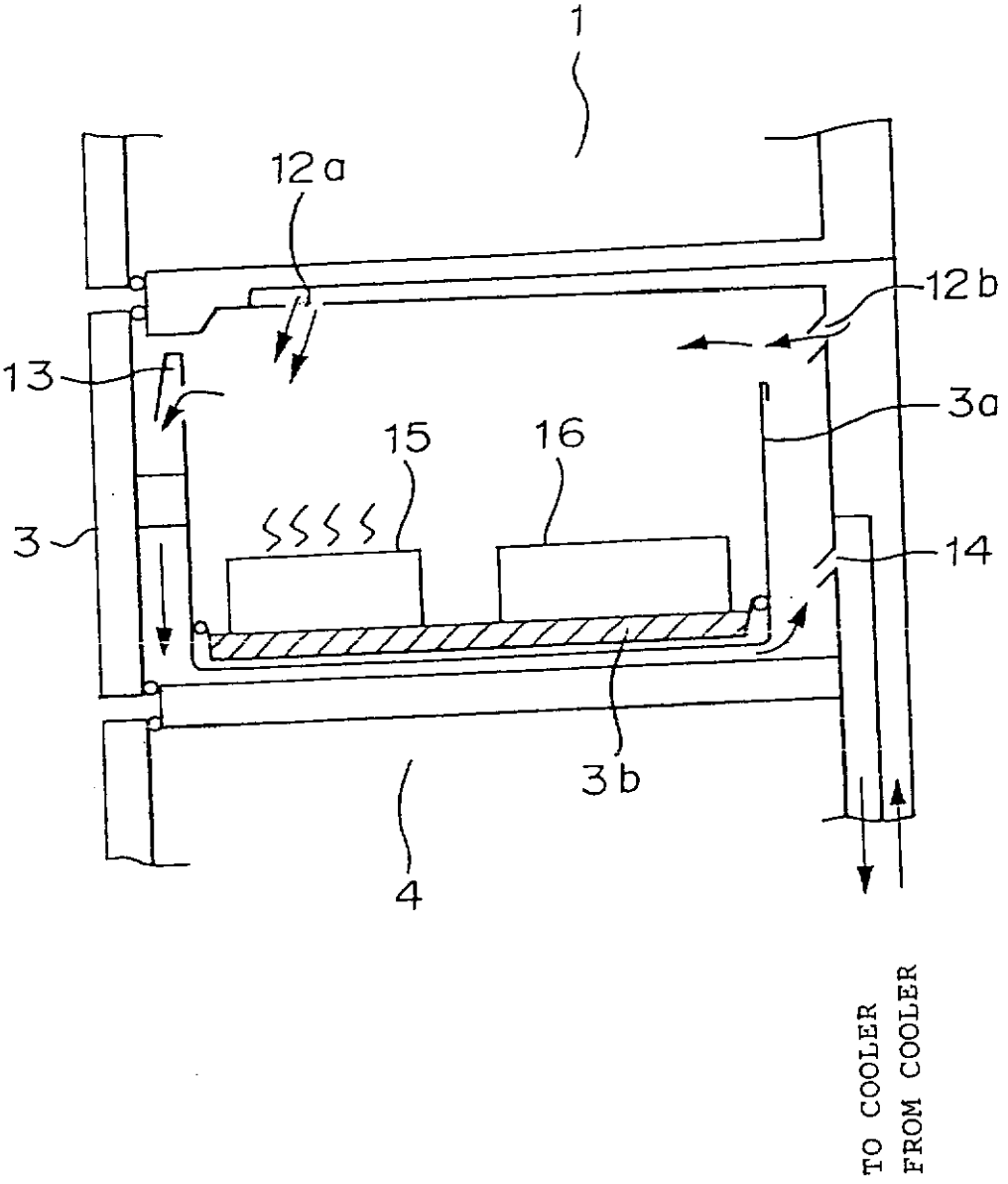

FIG. 7

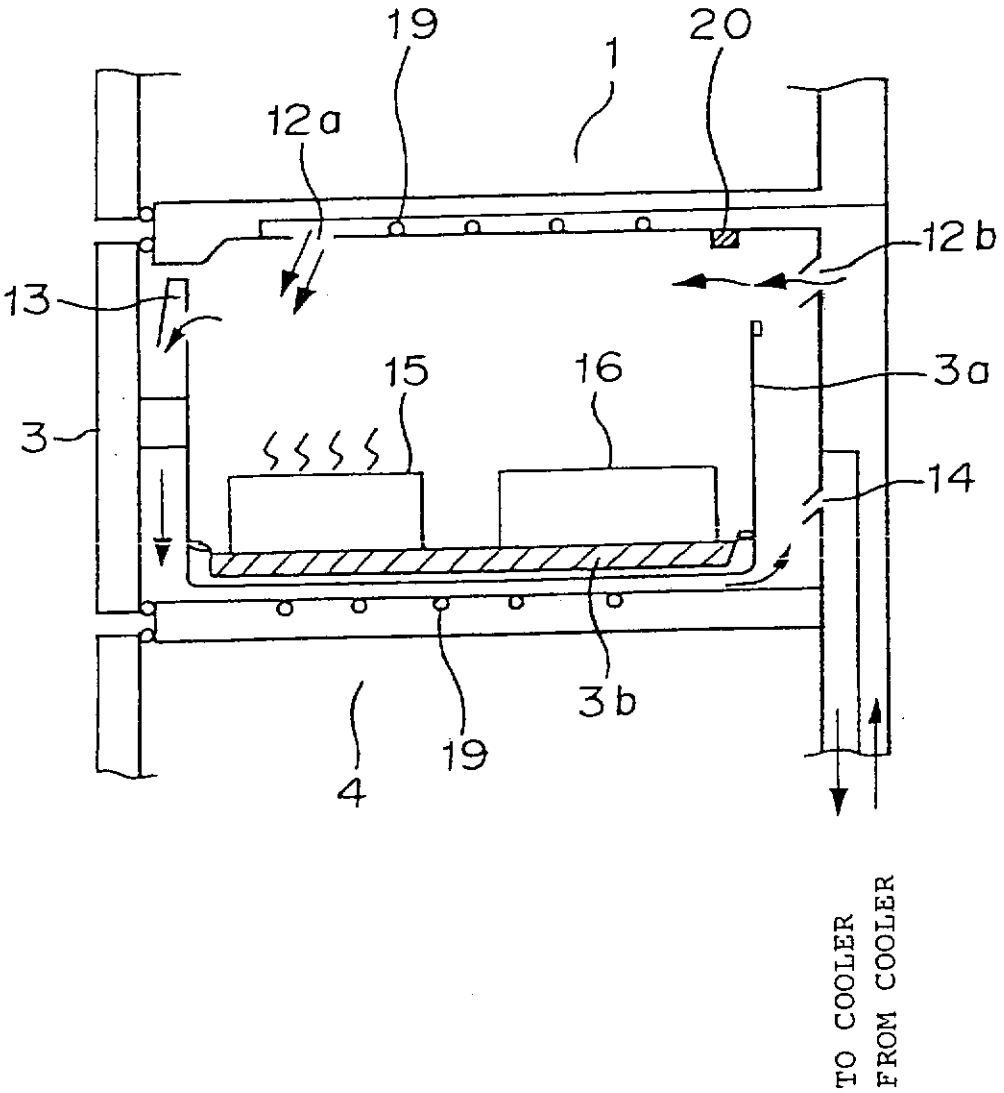

FIG. 8

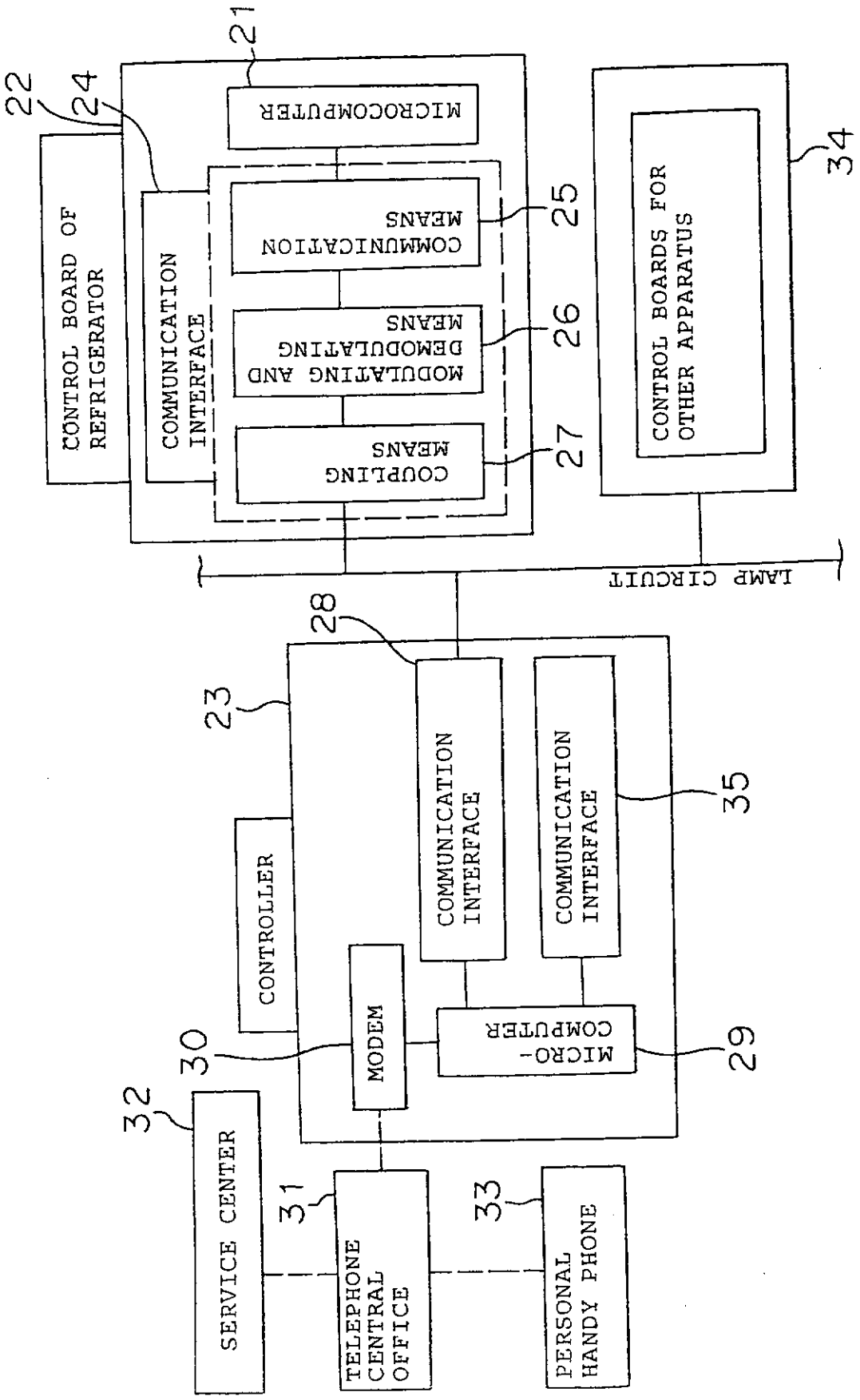
21
22
24
MICROCOMPUTER
CONTROL BOARD OF REFRIGERATOR
COMMUNICATION INTERFACE
COMMUNICATION MEANS
25
MODULATING AND DEMODULATING MEANS
26
COUPLING MEANS
27
CONTROL BOARDS FOR OTHER APPARATUS
34
LAMP CIRCUIT
28
23
CONTROLLER
COMMUNICATION INTERFACE
COMMUNICATION INTERFACE
35
MODEM
MICRO-COMPUTER
29
30
32
SERVICE CENTER
31
TELEPHONE CENTRAL OFFICE
33
PERSONAL HANDY PHONE

FIG. 9

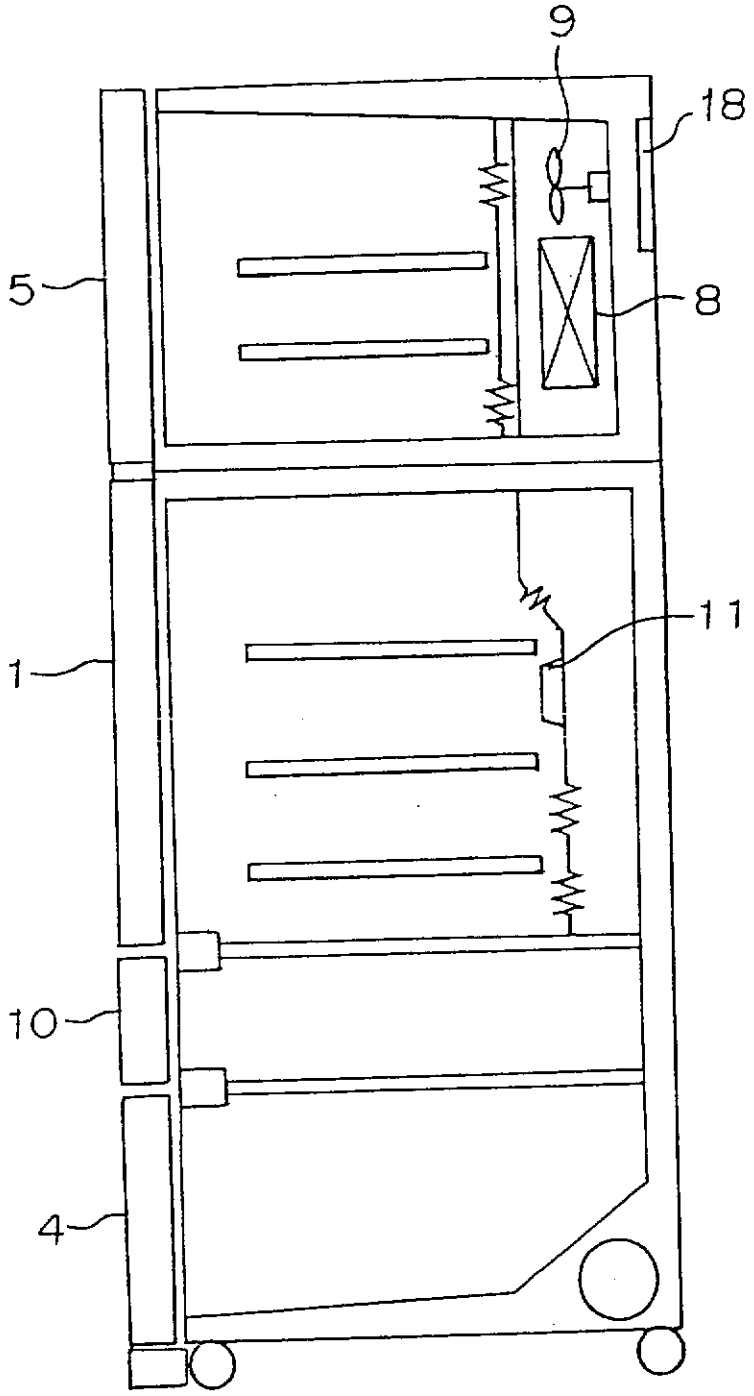

FIG. 10

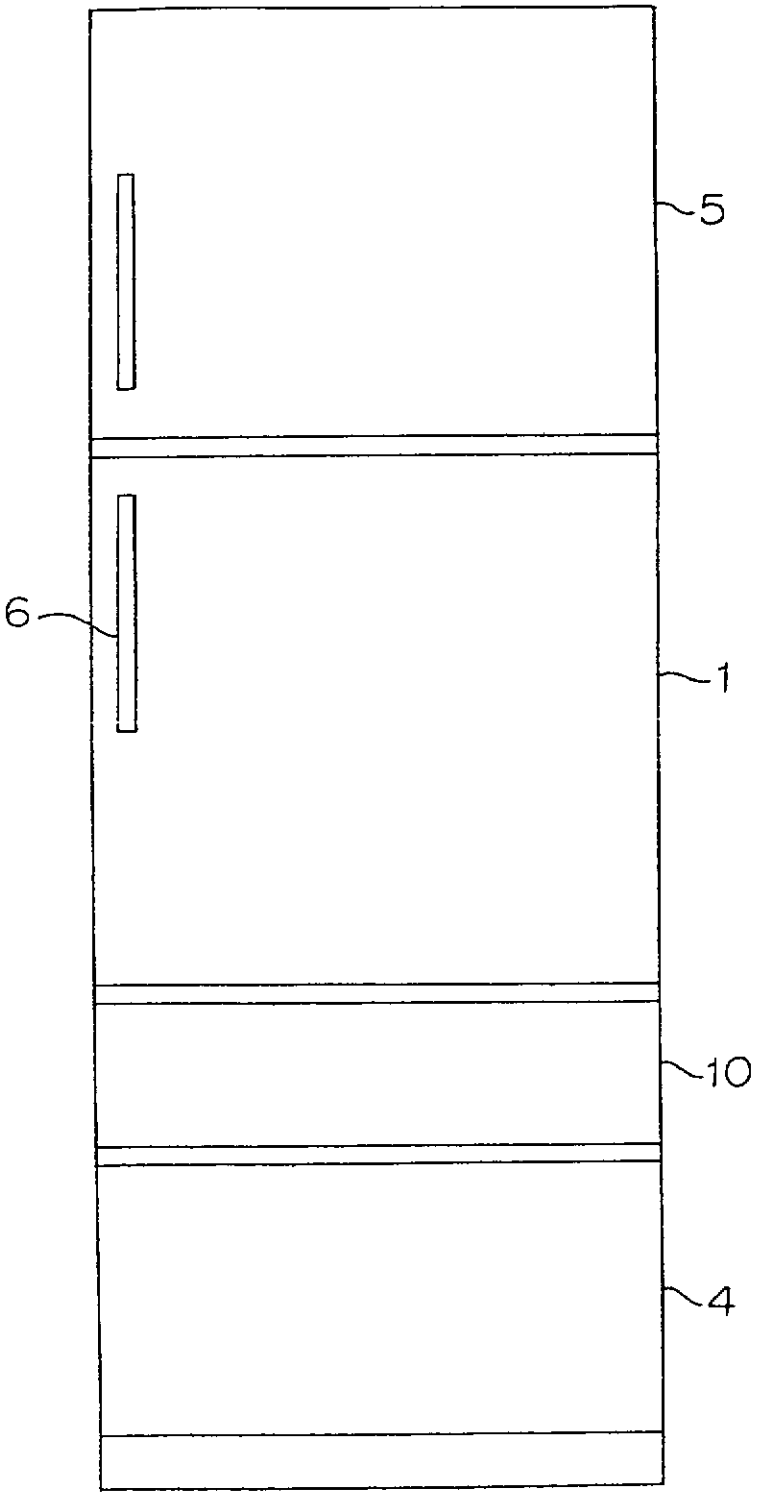

FIG. 11

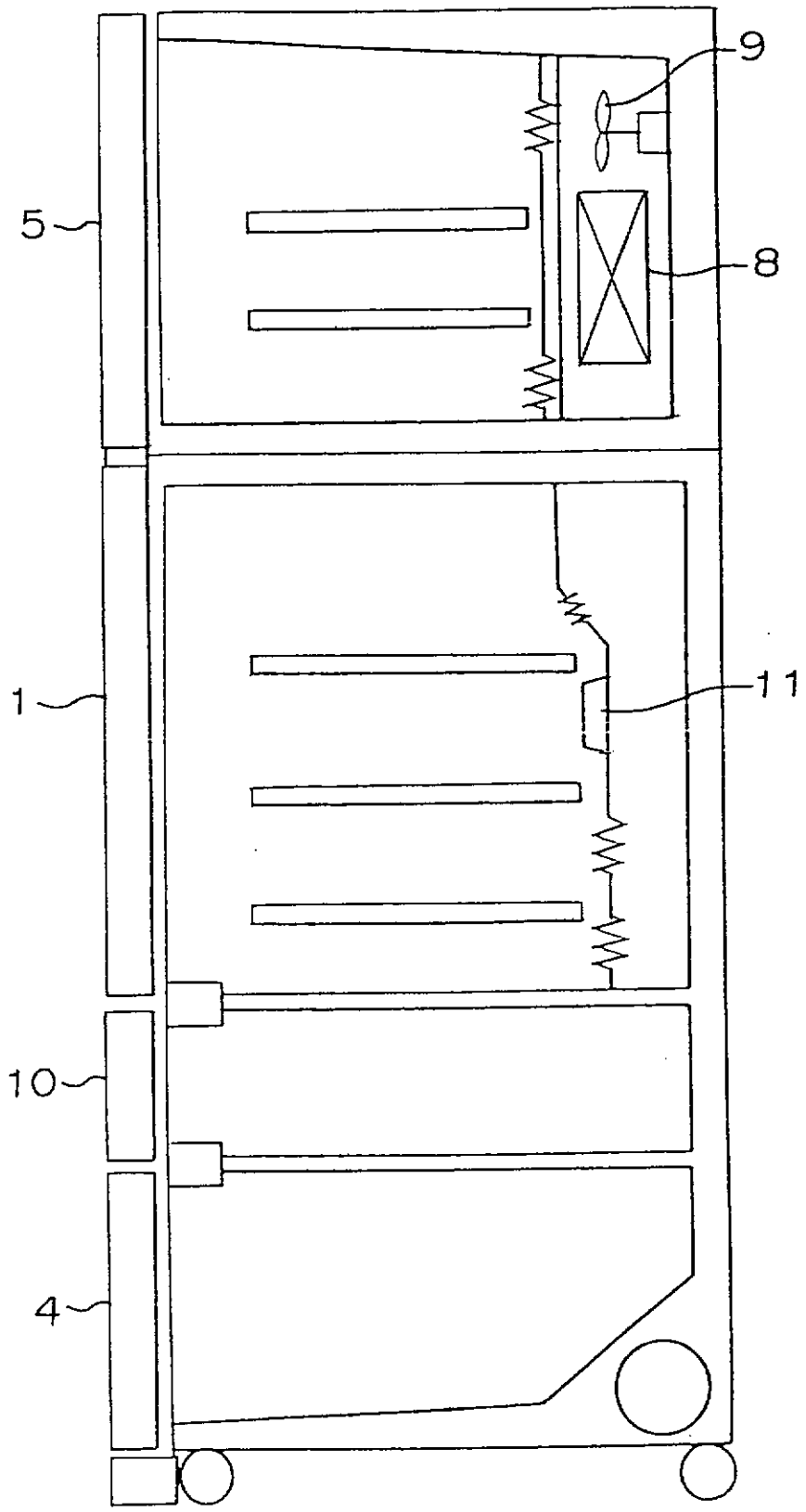

FIG. 12

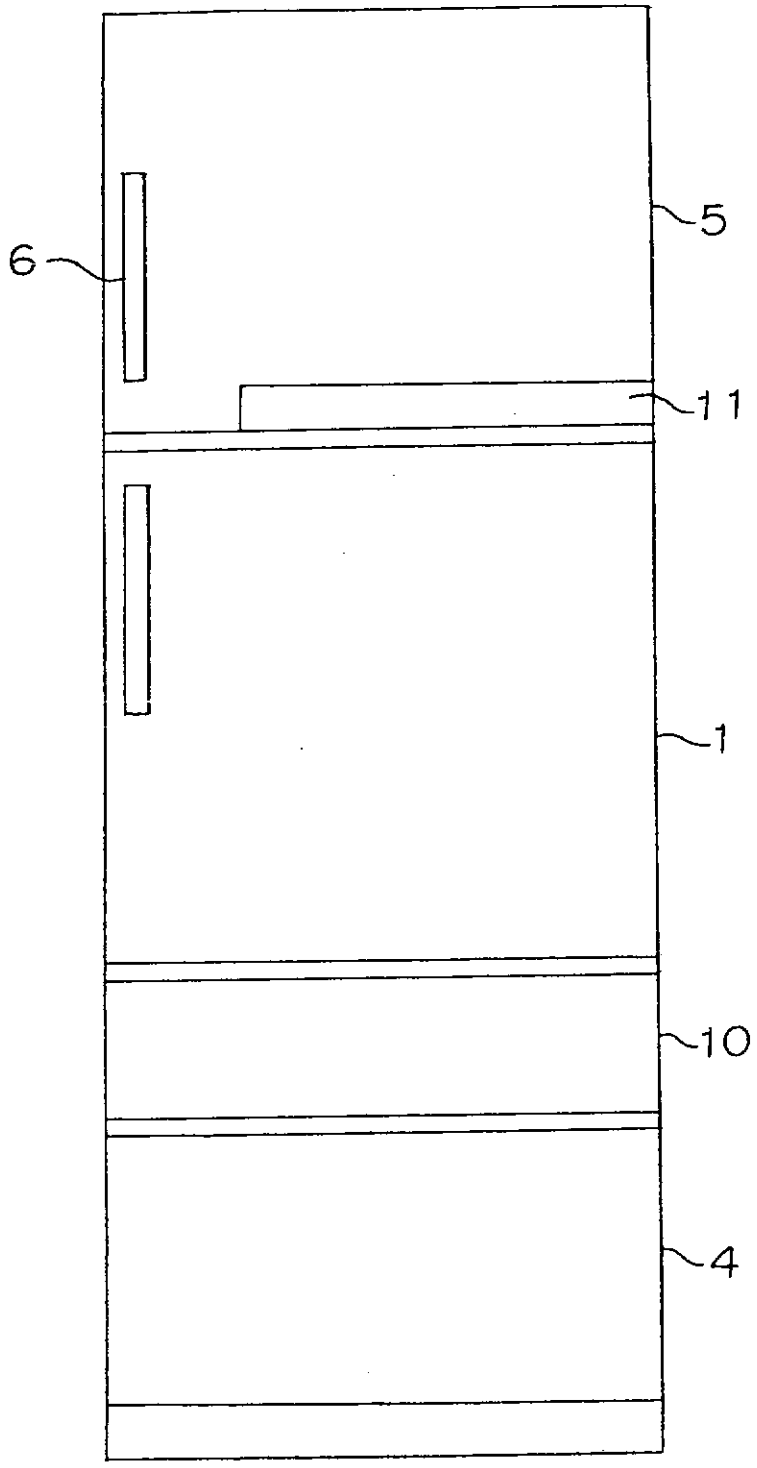

FIG. 13

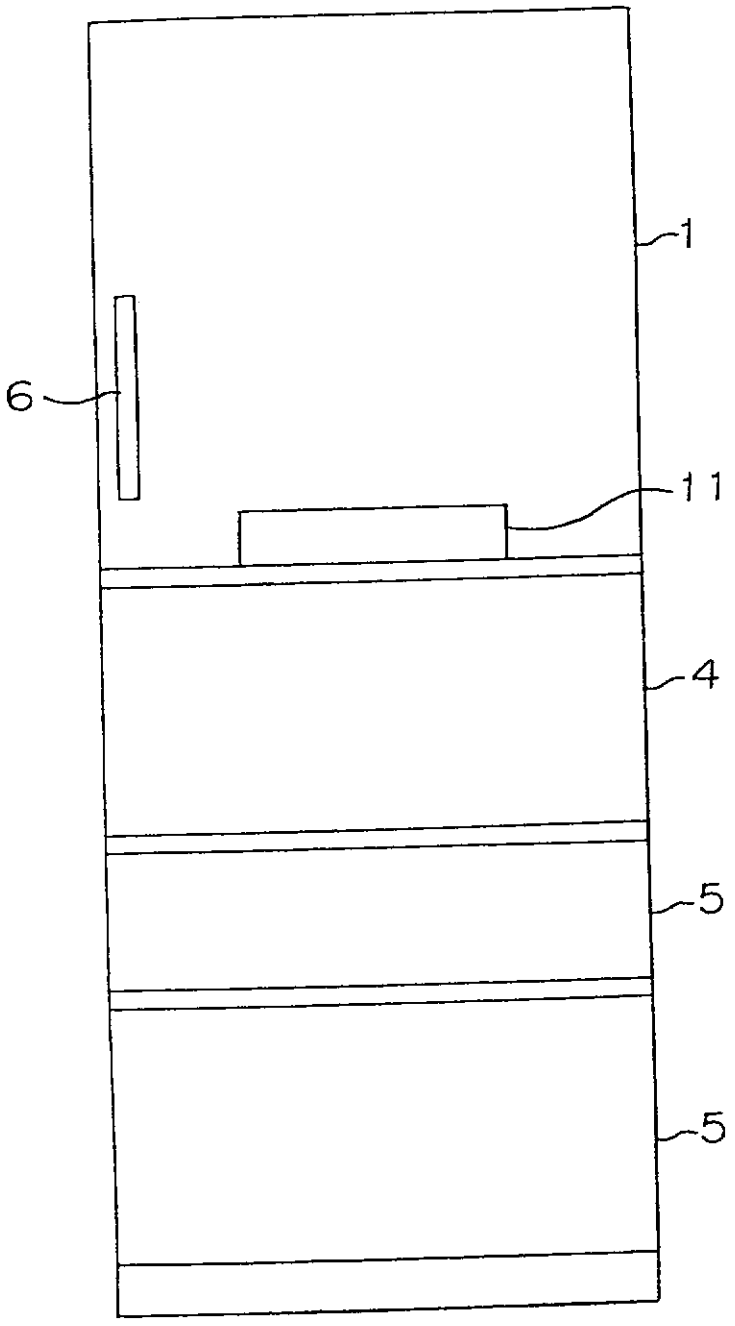

FIG. 14

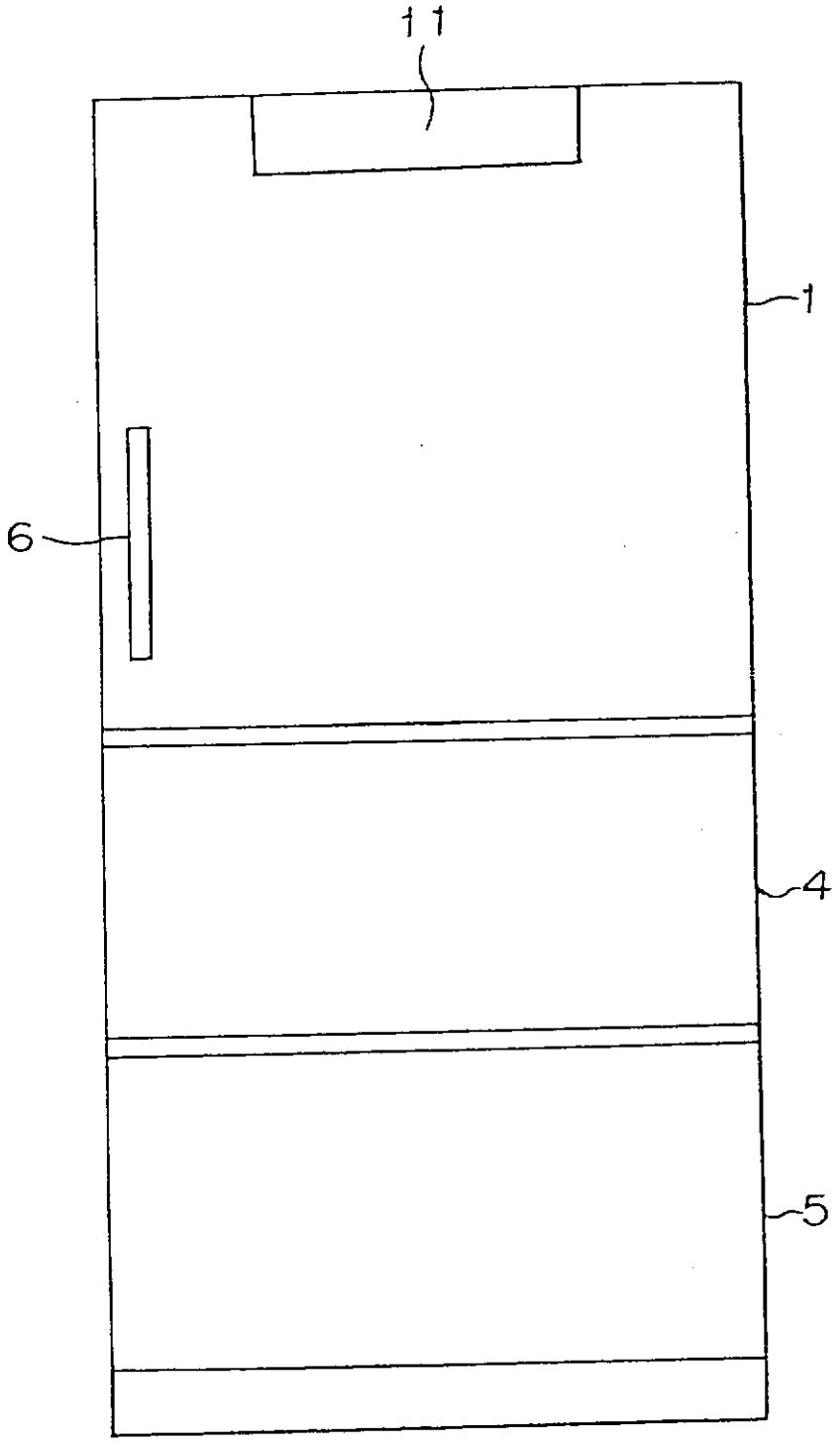

FIG. 15

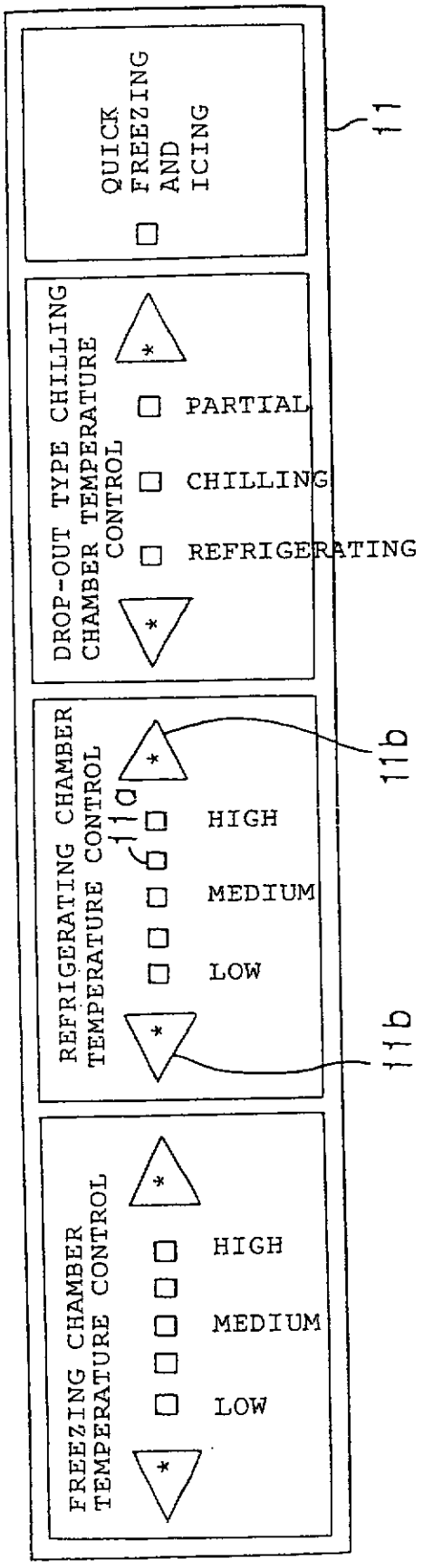
QUICK FREEZING AND ICING
11
DROP-OUT TYPE CHILLING CHAMBER TEMPERATURE CONTROL
PARTIAL
CHILLING
REFRIGERATING
REFRIGERATING CHAMBER TEMPERATURE CONTROL
11a
HIGH
MEDIUM
LOW
11b
11b
FREEZING CHAMBER TEMPERATURE CONTROL
HIGH
MEDIUM
LOW
*: PUSH

FIG. 16

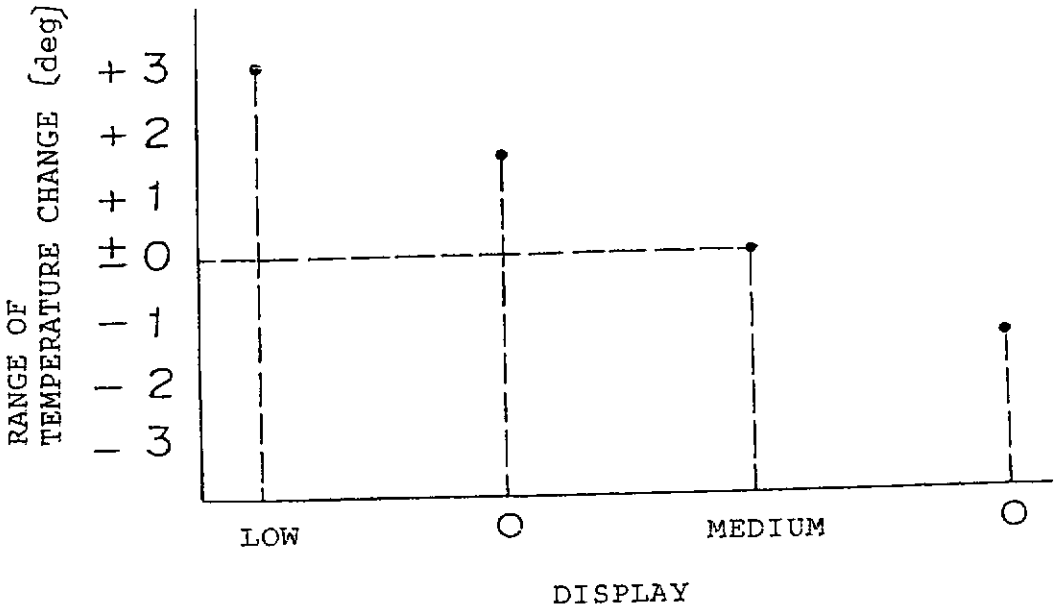
RANGE OF TEMPERATURE CHANGE (deg)
+3
+2
+1
±0
−1
−2
−3
LOW
MEDIUM
DISPLAY