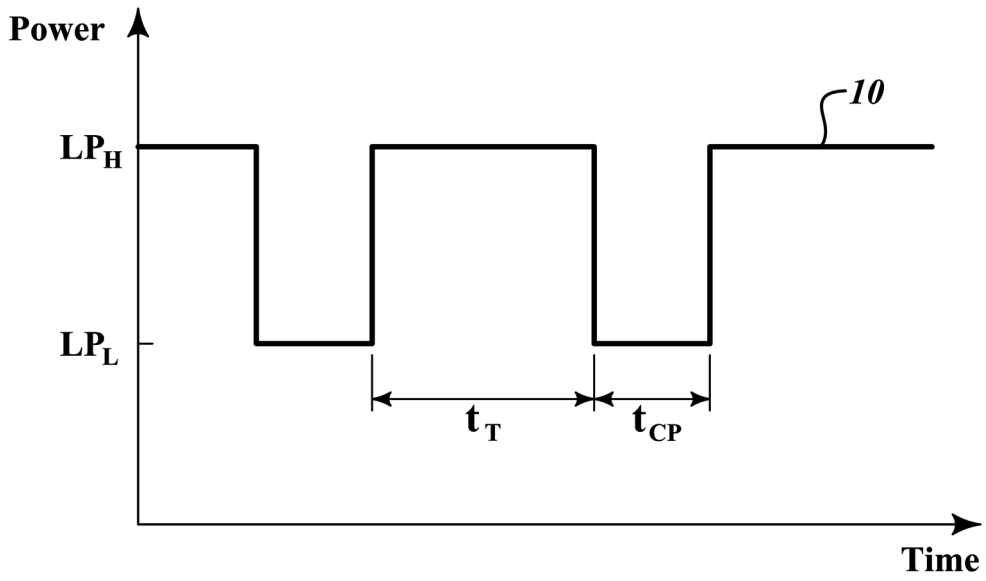

FIG.1

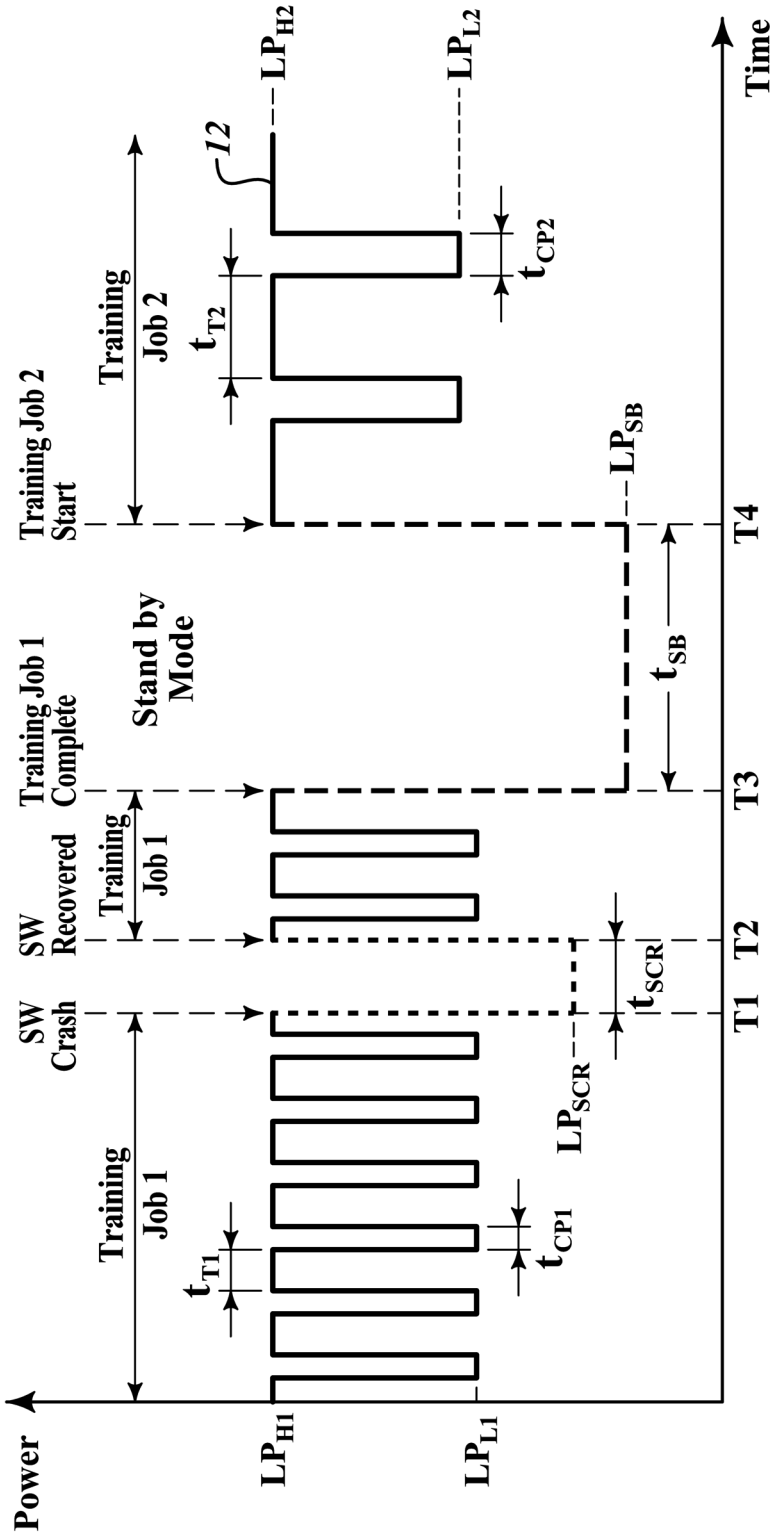
Power
Time
SW Crash
SW Recovered
Training Job 1 Complete
Stand by Mode
Training Job 2 Start
Training Job 1
Training Job 2
T1
T2
T3
T4
LP_{H1}
LP_{L1}
LP_{SCR}
LP_{SB}
LP_{H2}
LP_{L2}
t_{T1}
t_{CP1}
t_{SCR}
t_{SB}
t_{T2}
t_{CP2}
12

FIG.2

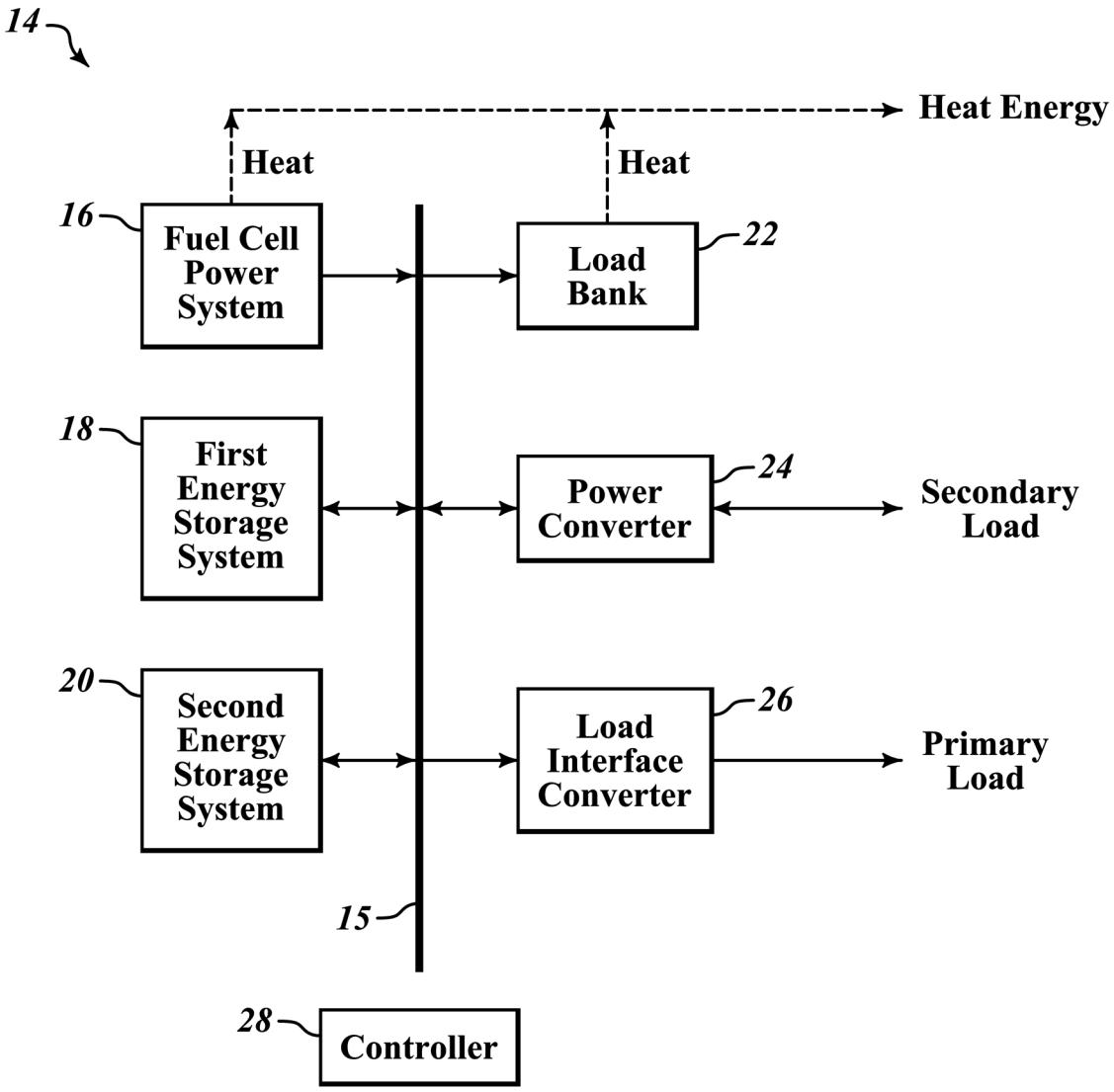
14
Heat Energy
Heat
Heat
16
Fuel Cell Power System
22
Load Bank
18
First Energy Storage System
24
Power Converter
Secondary Load
20
Second Energy Storage System
26
Load Interface Converter
Primary Load
15
28
Controller

FIG.3

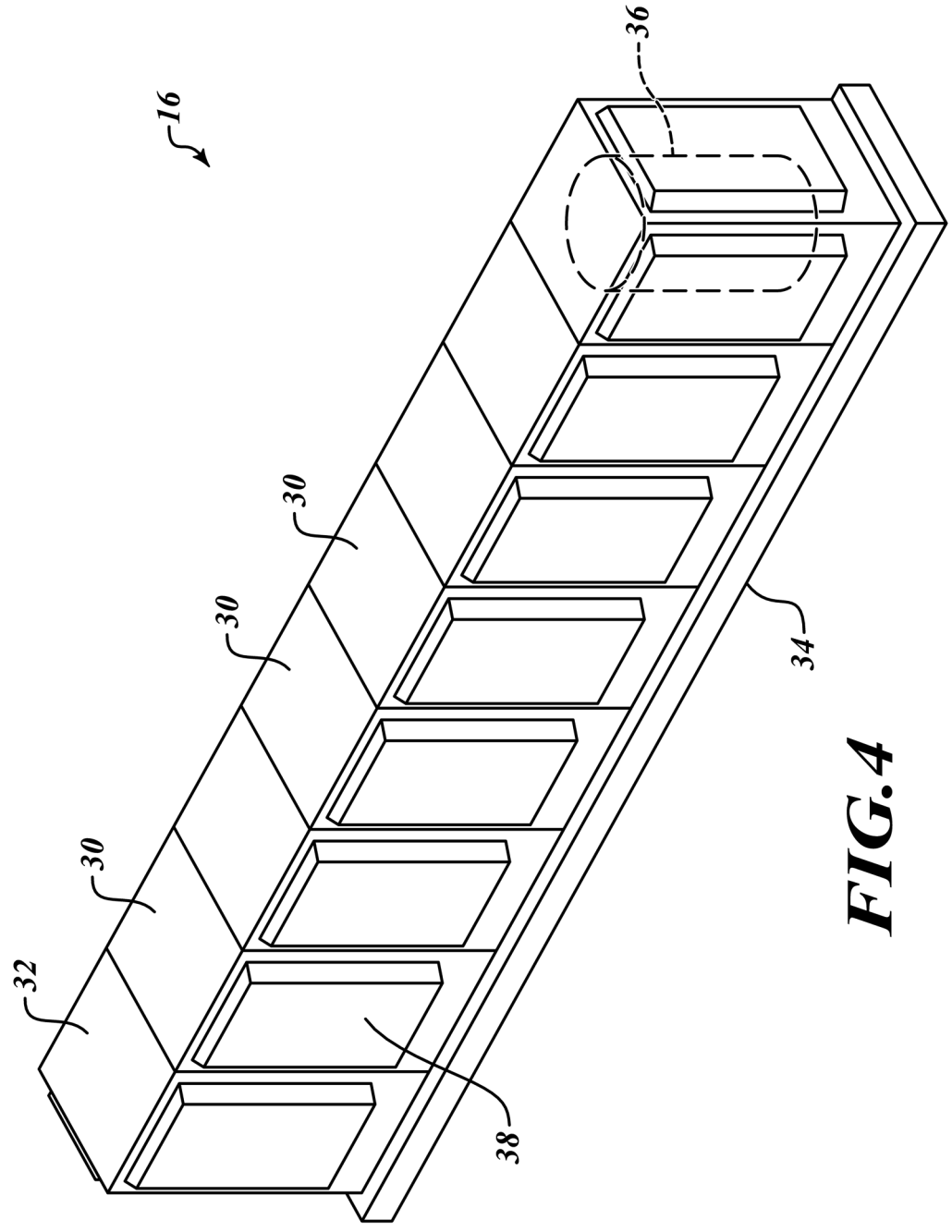

FIG.4

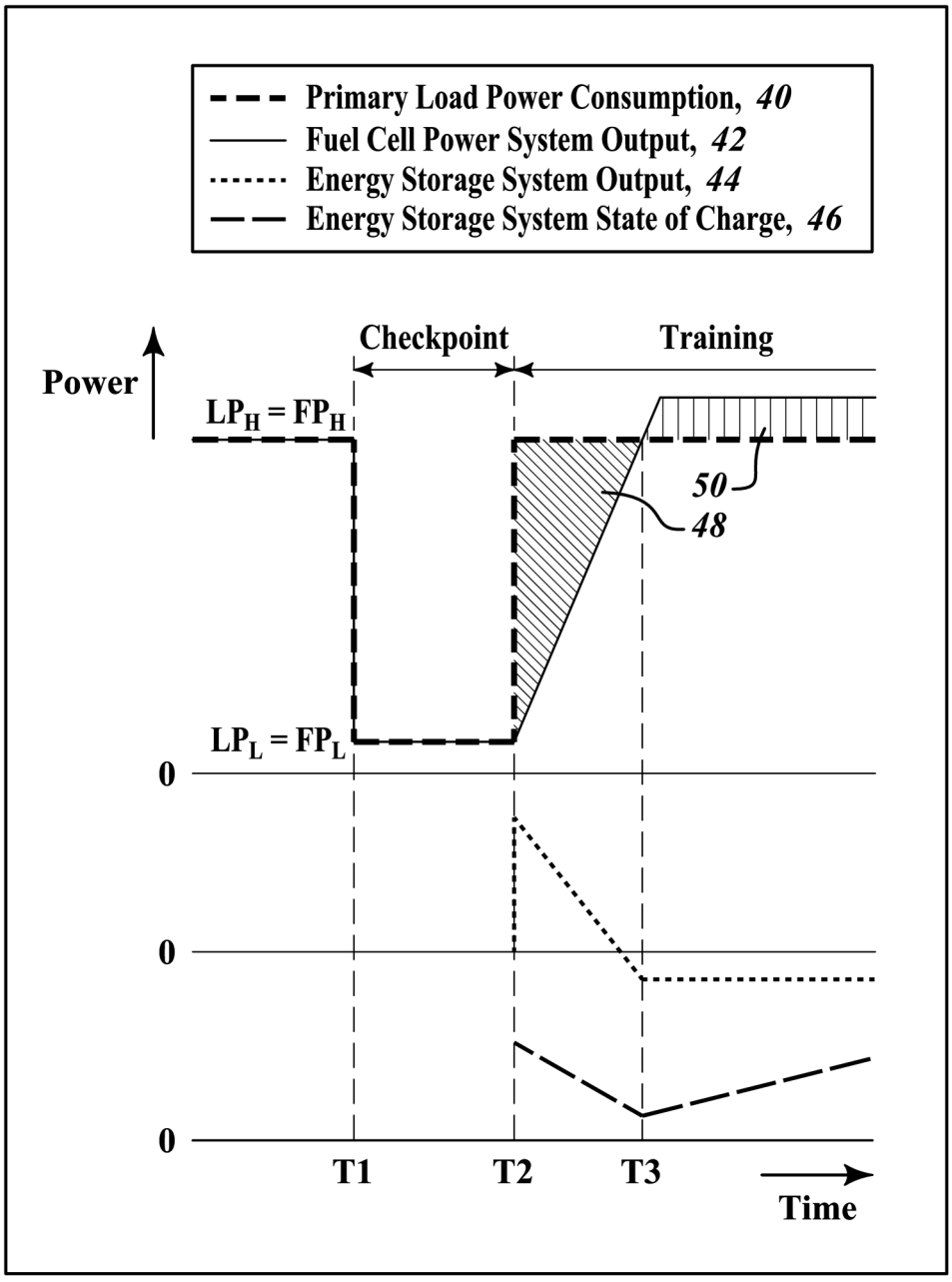
Primary Load Power Consumption, 40
Fuel Cell Power System Output, 42
Energy Storage System Output, 44
Energy Storage System State of Charge, 46
Power
Checkpoint
Training
LP_H = FP_H
LP_L = FP_L
50
48
0
0
0
T1
T2
T3
Time

FIG.5

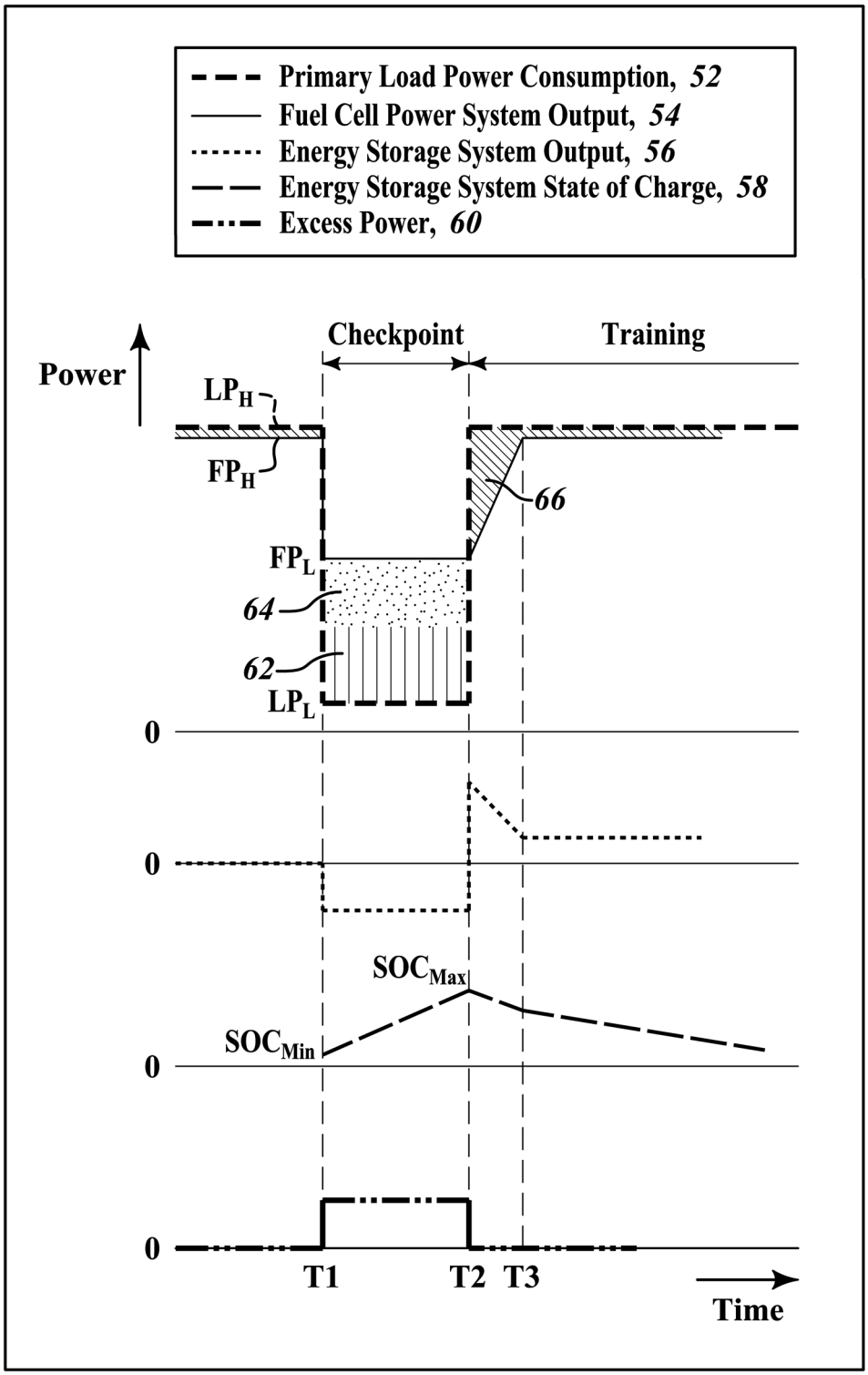
Primary Load Power Consumption, 52
Fuel Cell Power System Output, 54
Energy Storage System Output, 56
Energy Storage System State of Charge, 58
Excess Power, 60
Power
Checkpoint
Training
LP_H
FP_H
66
FP_L
64
62
LP_L
0
0
SOC_Max
SOC_Min
0
0
T1
T2
T3
Time

FIG.6

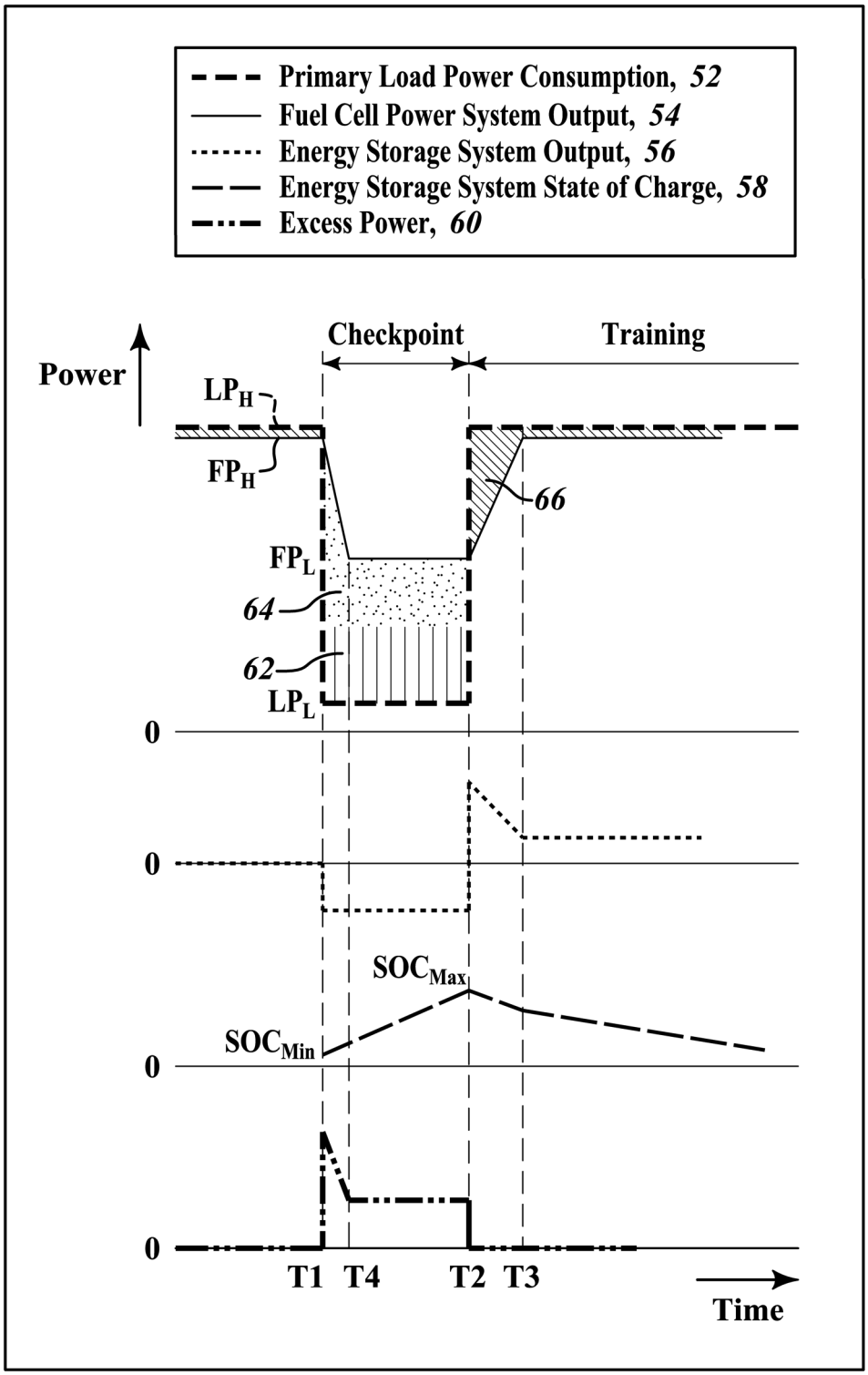
Primary Load Power Consumption, 52
Fuel Cell Power System Output, 54
Energy Storage System Output, 56
Energy Storage System State of Charge, 58
Excess Power, 60
Checkpoint
Training
Power
LPH
FPH
66
FPL
64
62
LPL
0
0
SOCMax
SOCMin
0
0
T1
T4
T2
T3
Time

FIG. 7

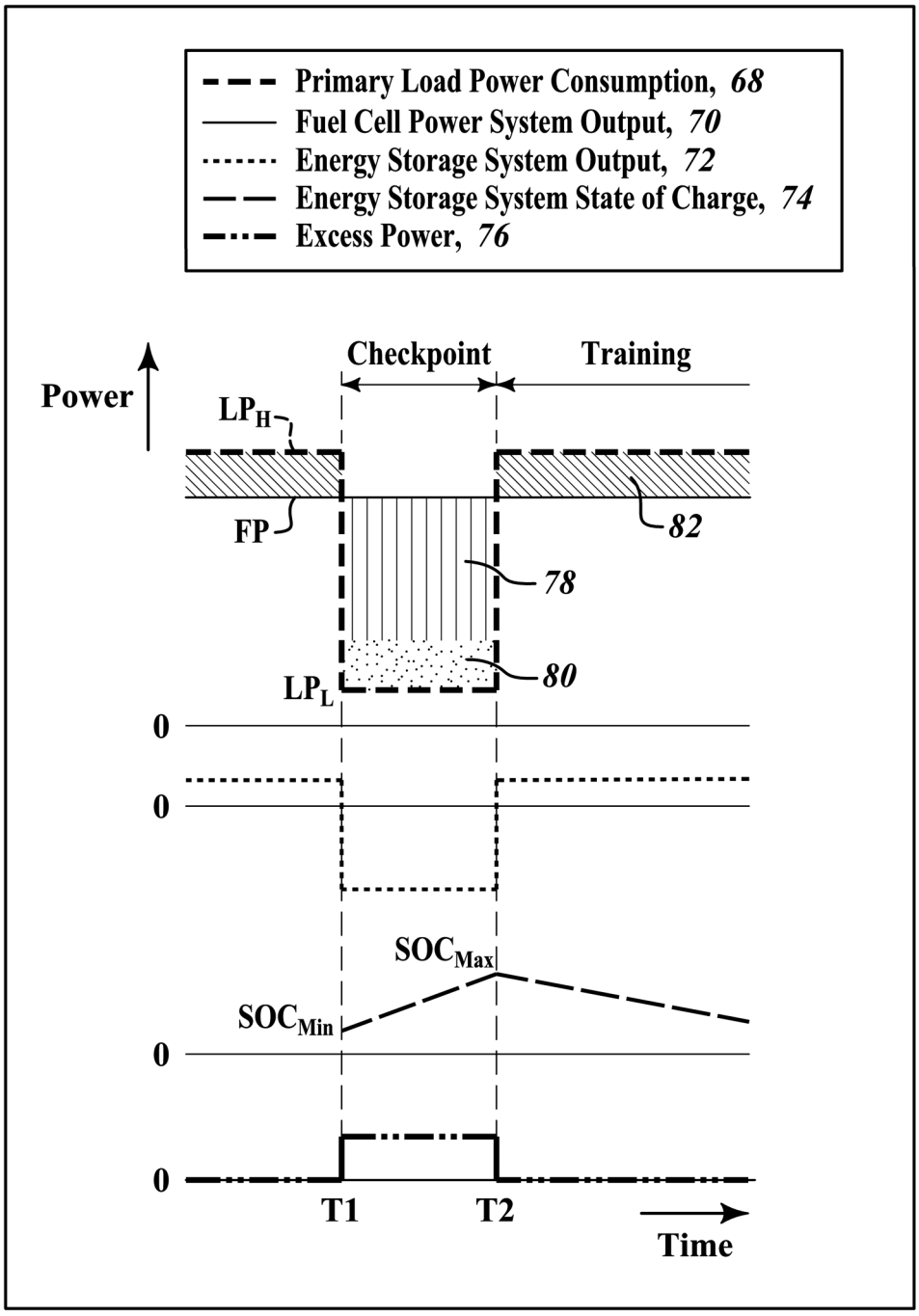
Primary Load Power Consumption, 68
Fuel Cell Power System Output, 70
Energy Storage System Output, 72
Energy Storage System State of Charge, 74
Excess Power, 76
Power
Checkpoint
Training
LP_H
FP
82
78
80
LP_L
0
0
SOC_Max
SOC_Min
0
0
T1
T2
Time

FIG.8

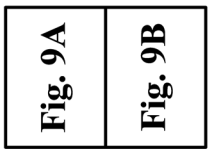
Fig. 9A
Fig. 9B

FIG. 9

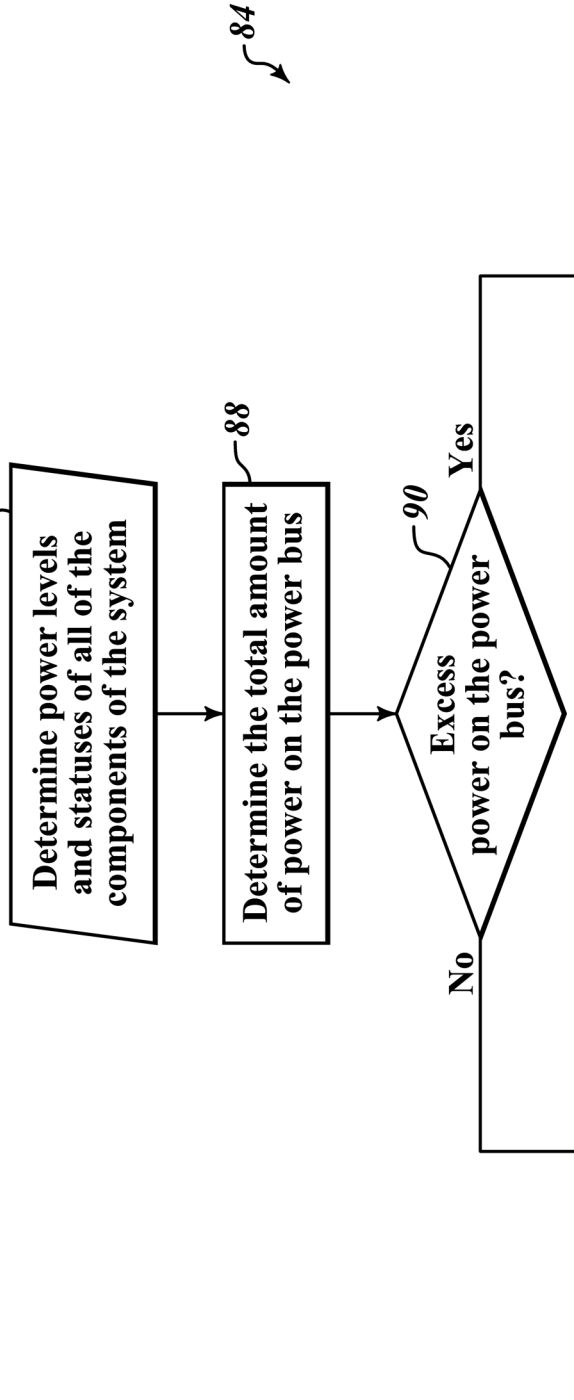
84
86
Determine power levels and statuses of all of the components of the system
88
Determine the total amount of power on the power bus
90
Excess power on the power bus?
Yes
No

FIG. 9A

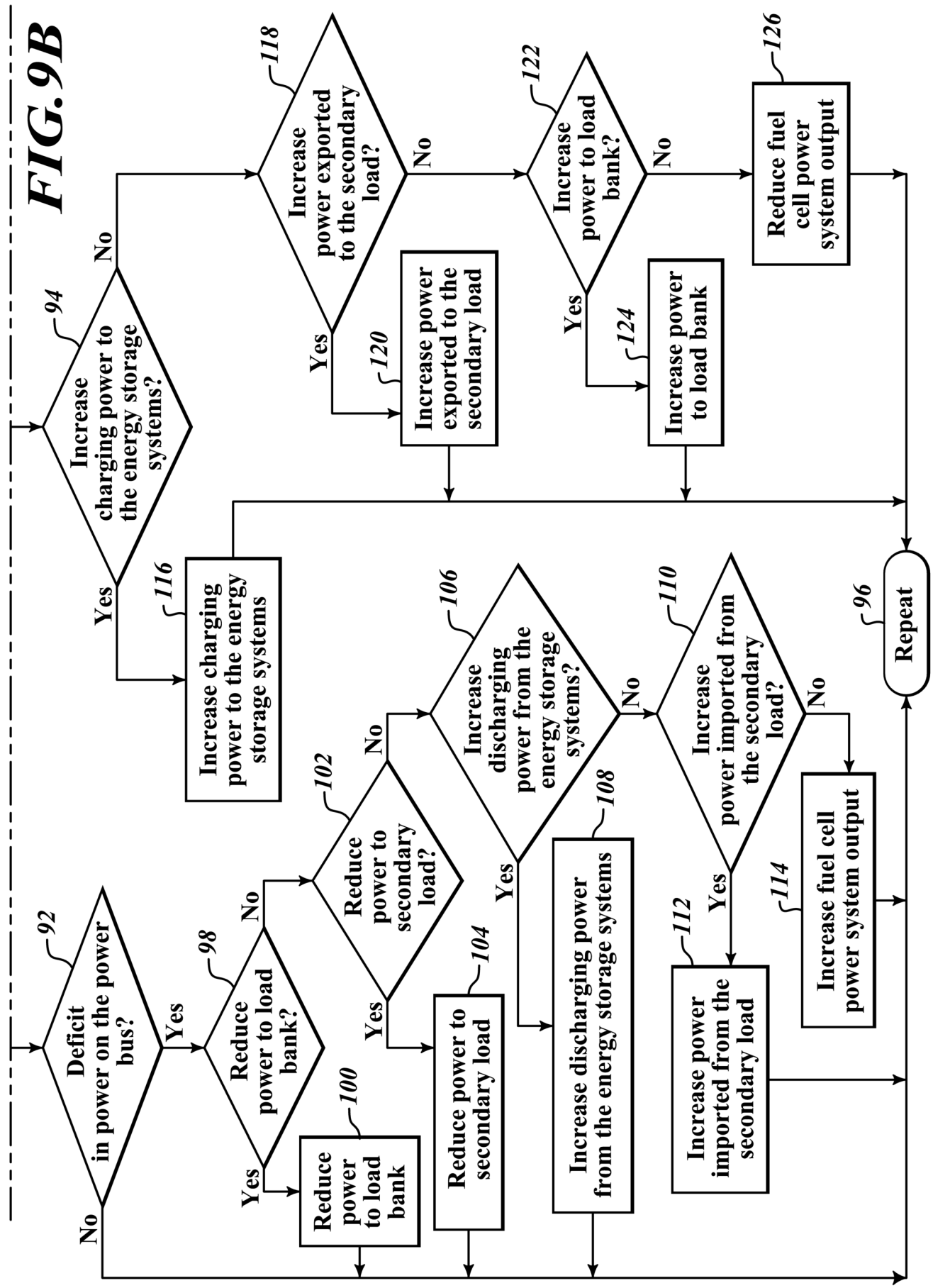
Deficit in power on the power bus?
92
No
Yes
Reduce power to load bank?
98
Yes
No
Reduce power to load bank
100
Reduce power to secondary load?
102
Yes
No
Reduce power to secondary load
104
Increase discharging power from the energy storage systems?
106
Yes
No
Increase discharging power from the energy storage systems
108
Increase power imported from the secondary load?
110
Yes
No
Increase power imported from the secondary load
112
Increase fuel cell power system output
114
Repeat
96
Increase charging power to the energy storage systems?
94
Yes
No
Increase charging power to the energy storage systems
116
Increase power exported to the secondary load?
118
Yes
No
Increase power exported to the secondary load
120
Increase power to load bank?
122
Yes
No
Increase power to load bank
124
Reduce fuel cell power system output
126

FIG. 9B