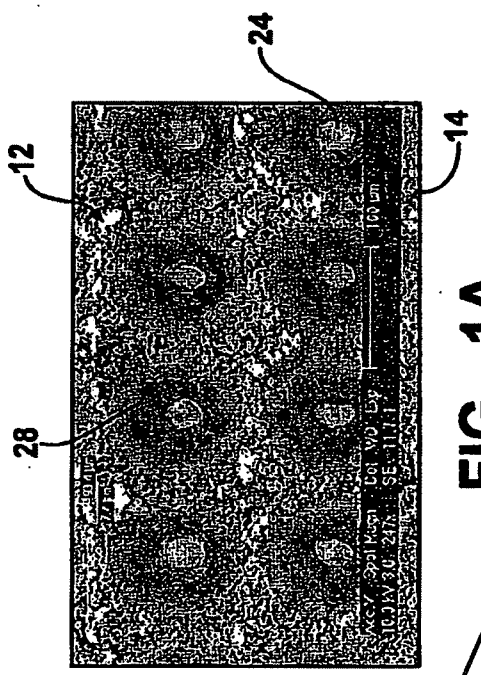

FIG - 1A

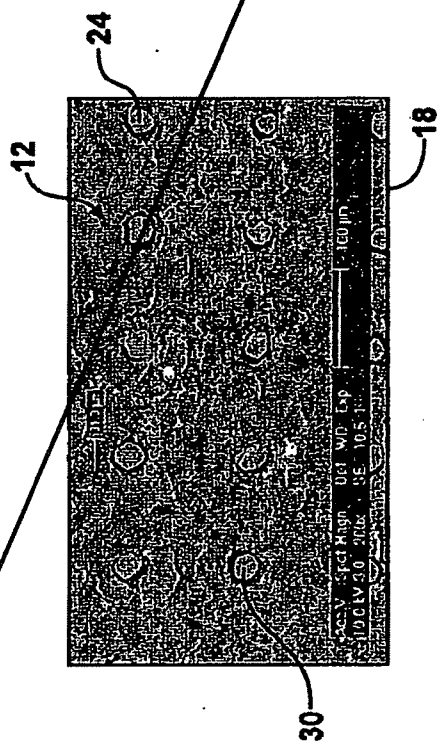

FIG - 1B

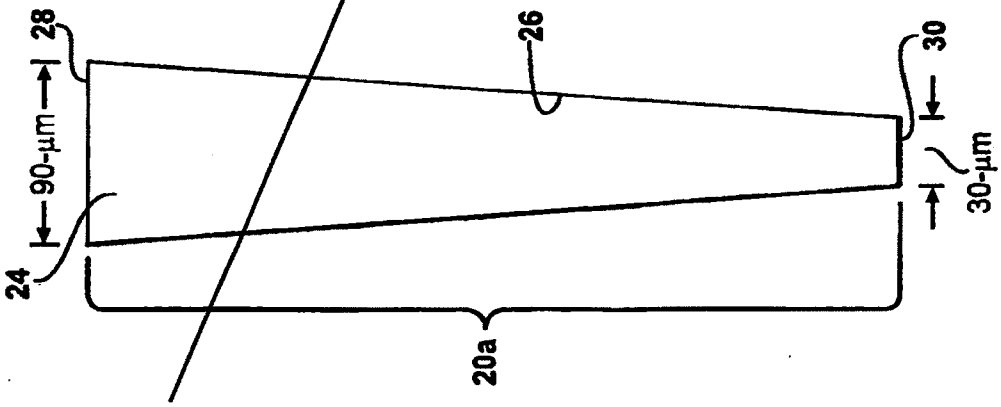

FIG - 1

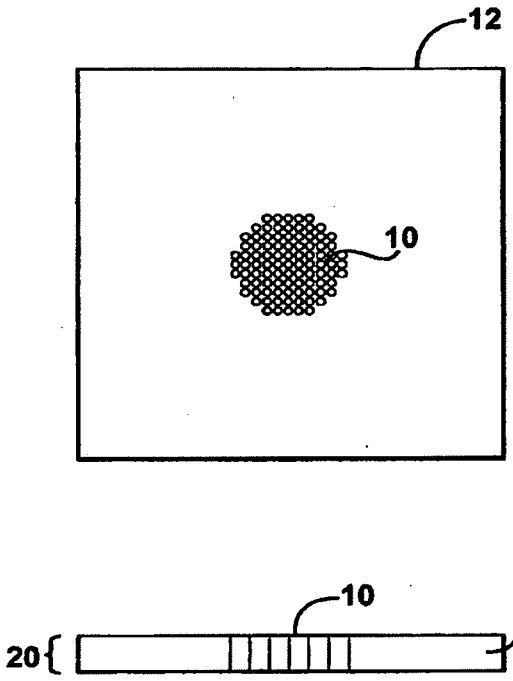

FIG - 2

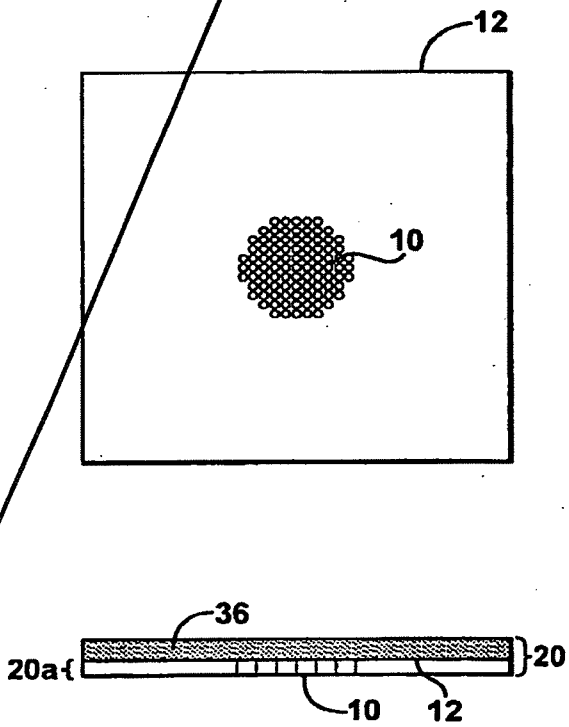

FIG - 3

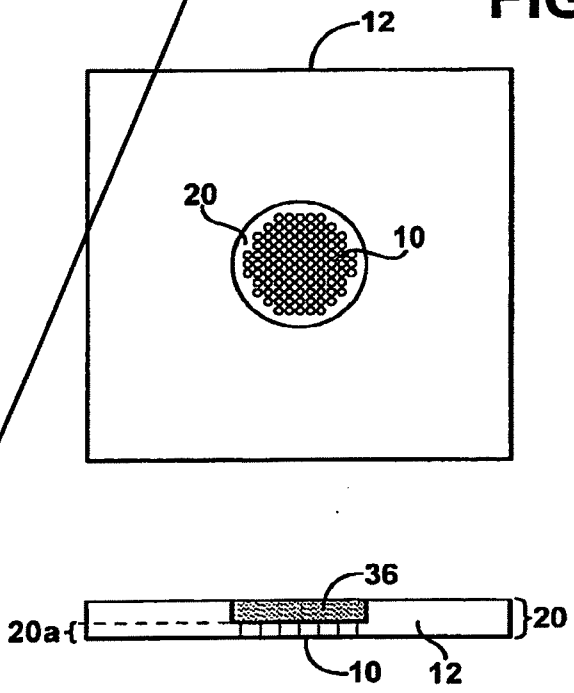

FIG - 4

FIG - 5

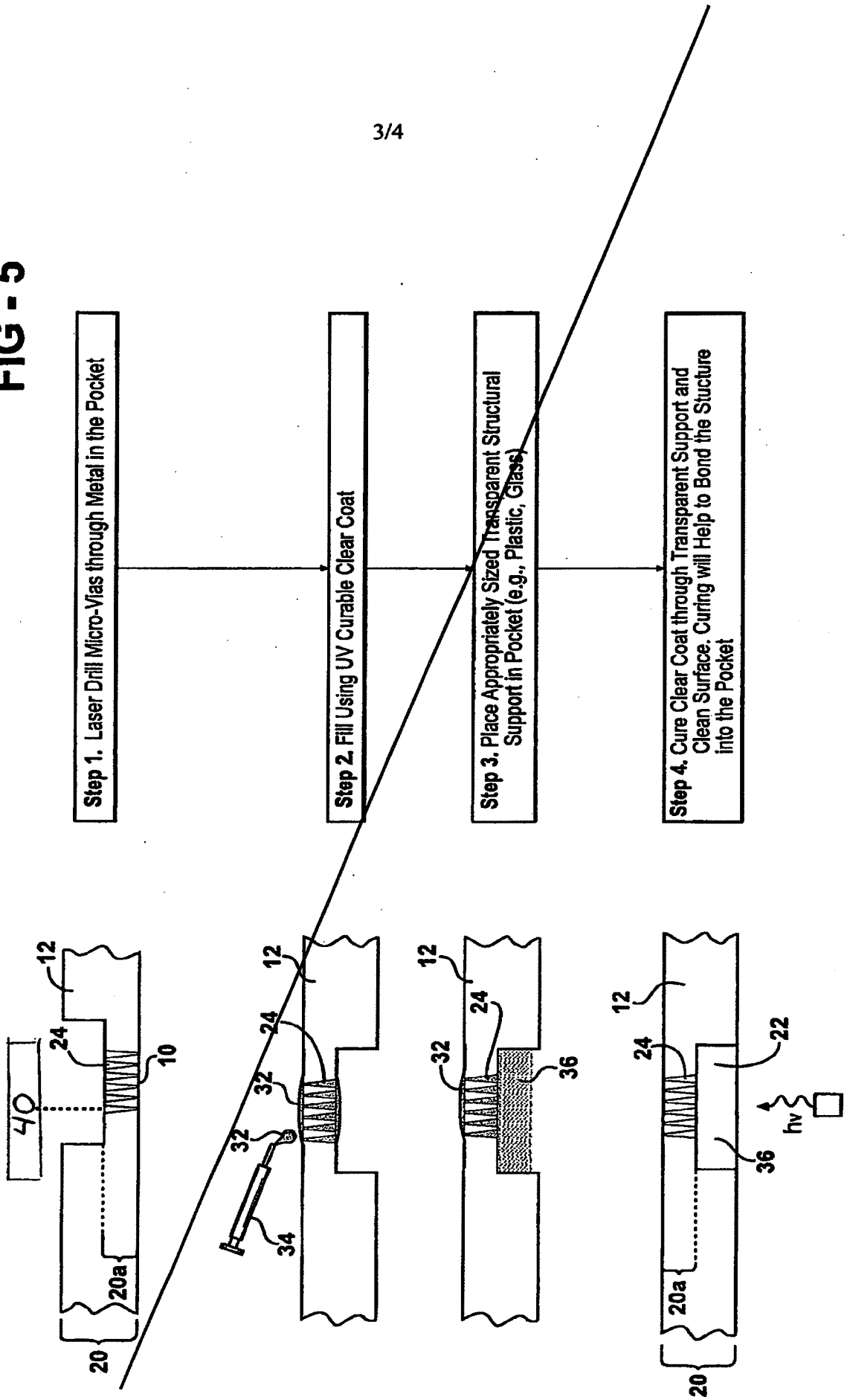
Step 1. Laser Drill Micro-Vias through Metal in the Pocket
Step 2. Fill Using UV Curable Clear Coat
Step 3. Place Appropriately Sized Transparent Structural Support in Pocket (e.g., Plastic, Glass)
Step 4. Cure Clear Coat through Transparent Support and Clean Surface. Curing will Help to Bond the Stucture into the Pocket
40
12
24
10
20a
20
32
34
36
22
hv

FIG - 6

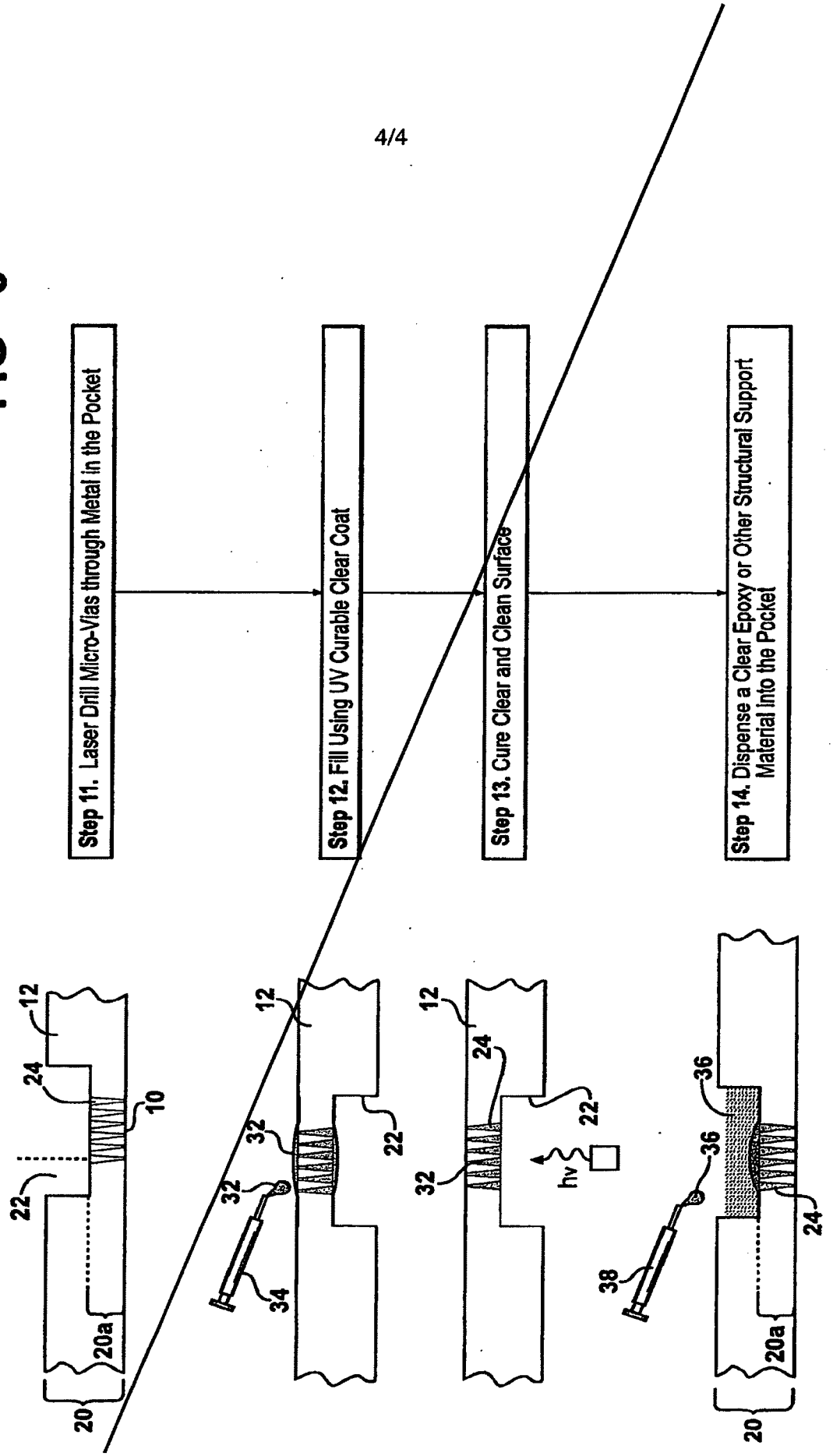
Step 11. Laser Drill Micro-Vias through Metal in the Pocket
Step 12. Fill Using UV Curable Clear Coat
Step 13. Cure Clear and Clean Surface
Step 14. Dispense a Clear Epoxy or Other Structural Support Material into the Pocket
12
24
10
22
20a
20
32
34
hv
36
38

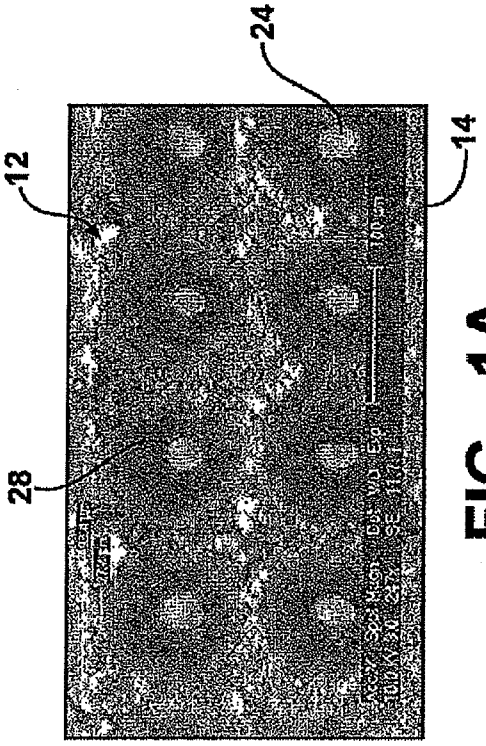

FIG - 1A

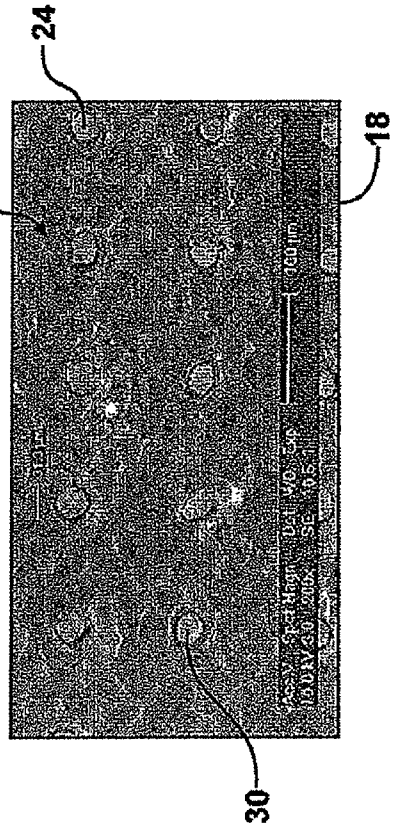

FIG - 1B

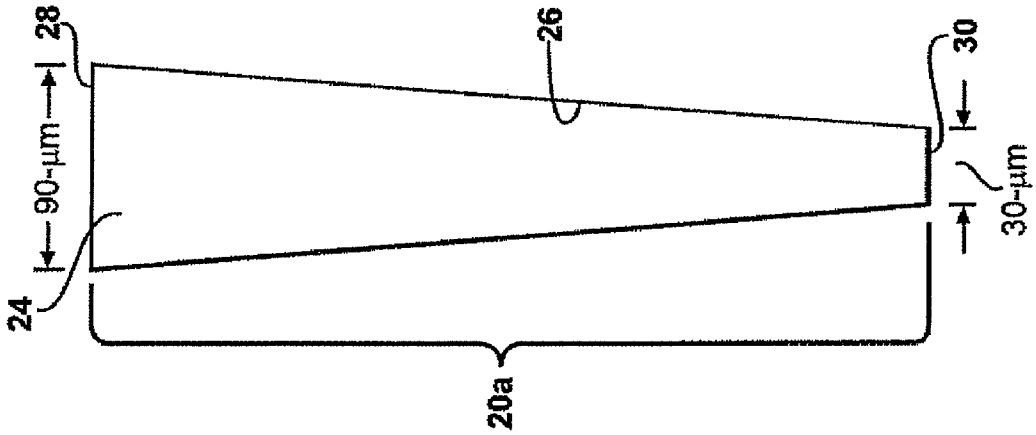

FIG - 1

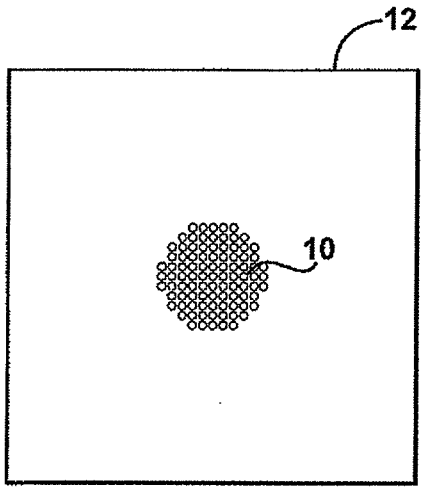

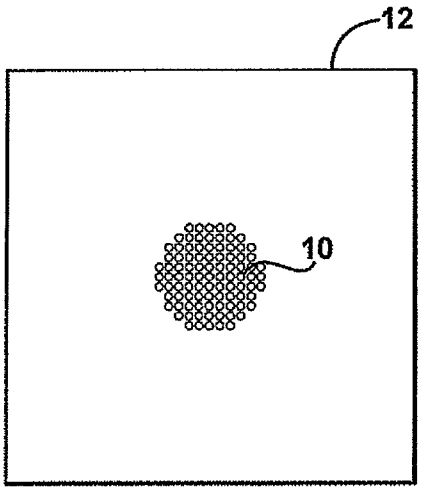

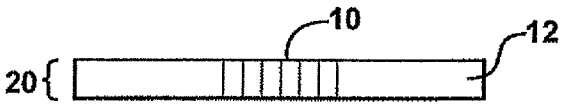

FIG - 2

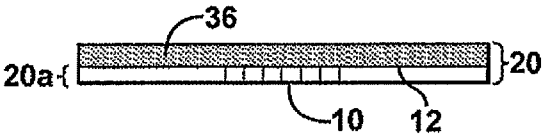

FIG - 3

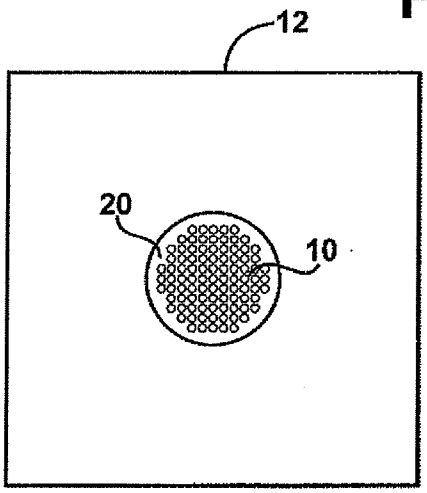

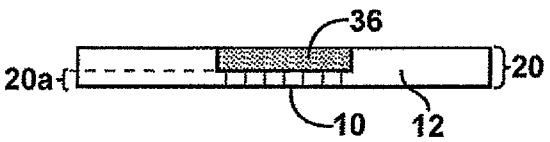

FIG - 4

FIG - 5

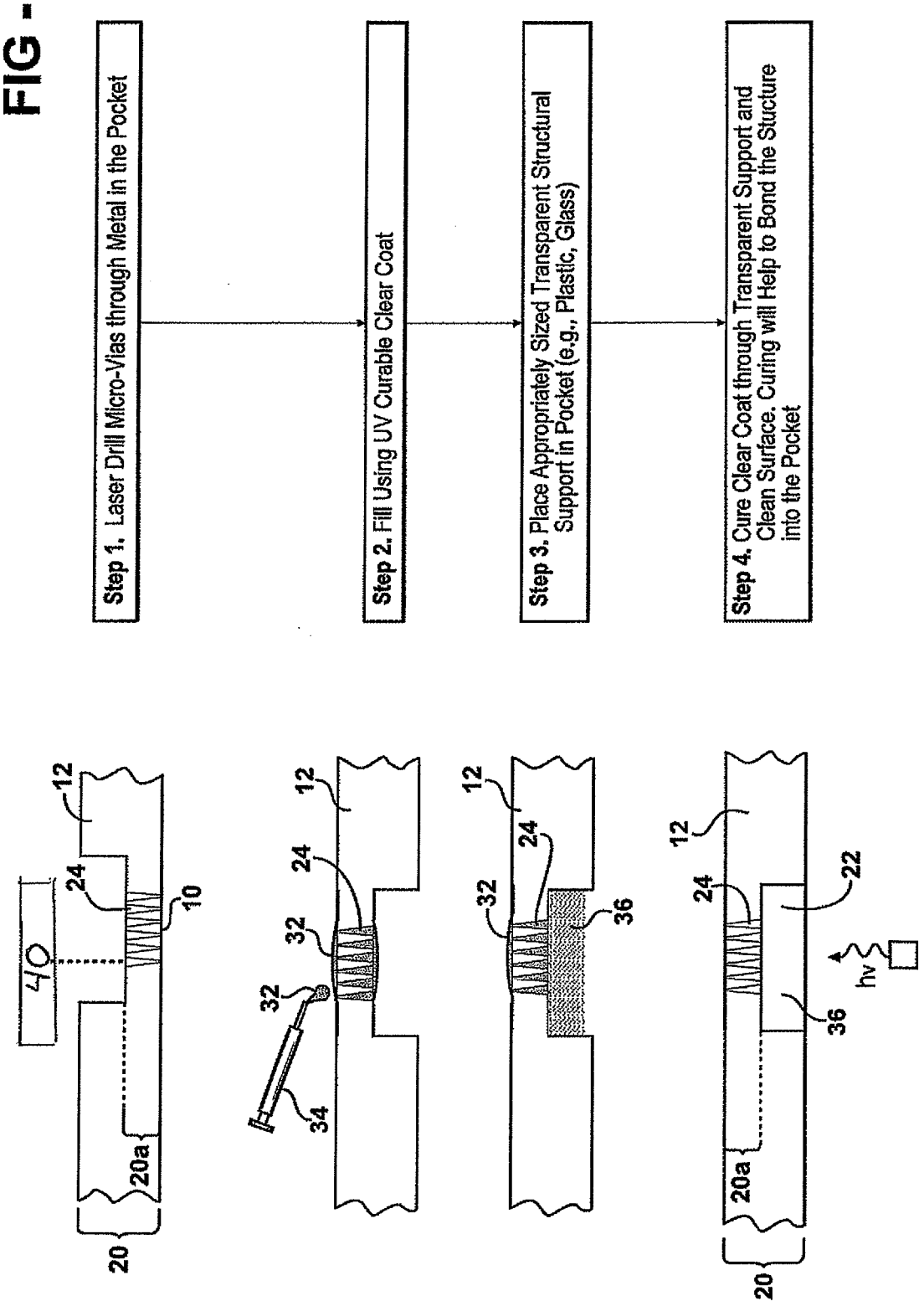
Step 1. Laser Drill Micro-Vias through Metal in the Pocket
Step 2. Fill Using UV Curable Clear Coat
Step 3. Place Appropriately Sized Transparent Structural Support in Pocket (e.g., Plastic, Glass)
Step 4. Cure Clear Coat through Transparent Support and Clean Surface. Curing will Help to Bond the Stucture into the Pocket
40
12
24
10
20a
20
32
34
36
22
hv

FIG - 6

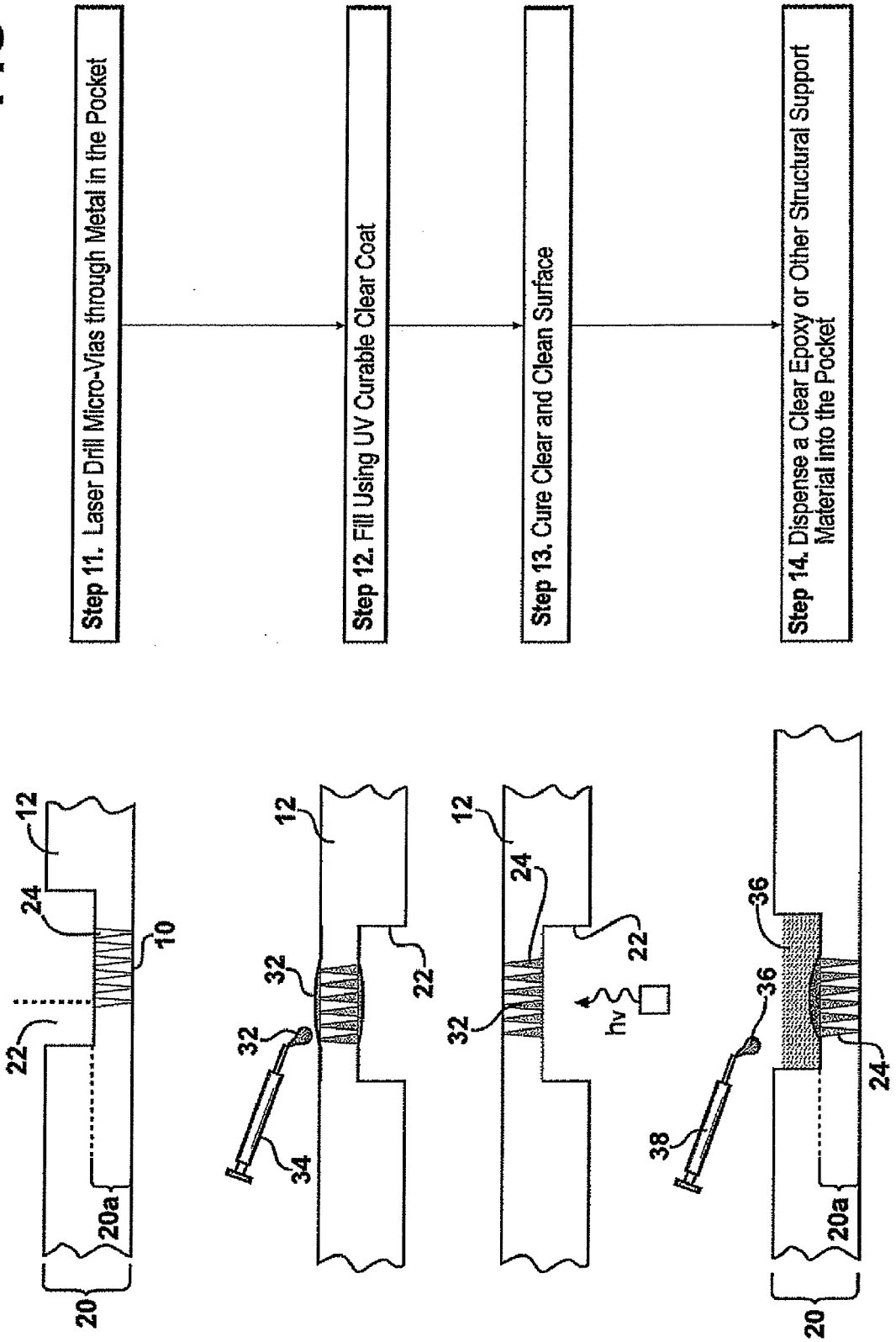
Step 11. Laser Drill Micro-Vias through Metal in the Pocket
Step 12. Fill Using UV Curable Clear Coat
Step 13. Cure Clear and Clean Surface
Step 14. Dispense a Clear Epoxy or Other Structural Support Material into the Pocket
12
24
10
22
20a
20
32
34
hv
38
36