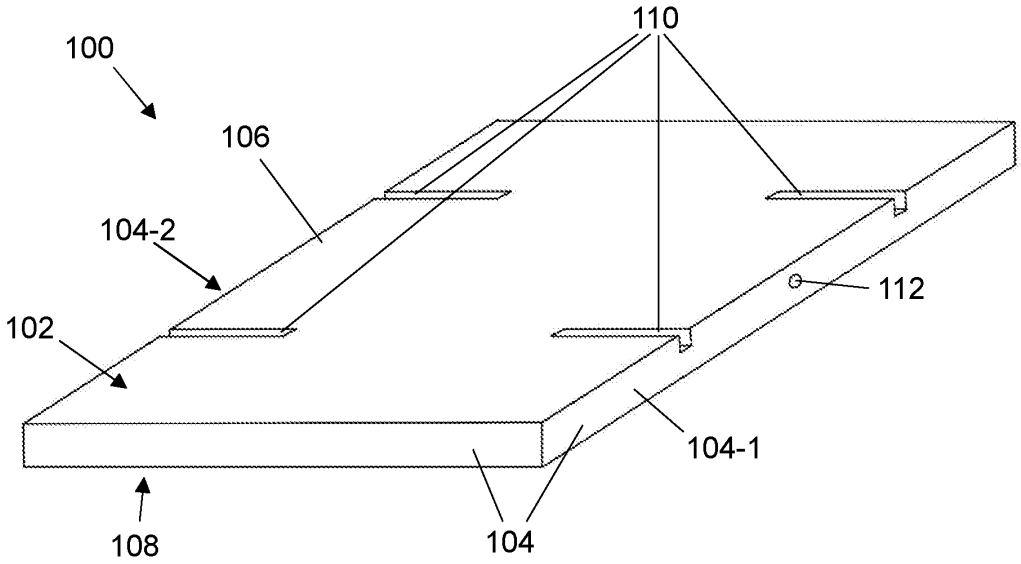

Figure 1A

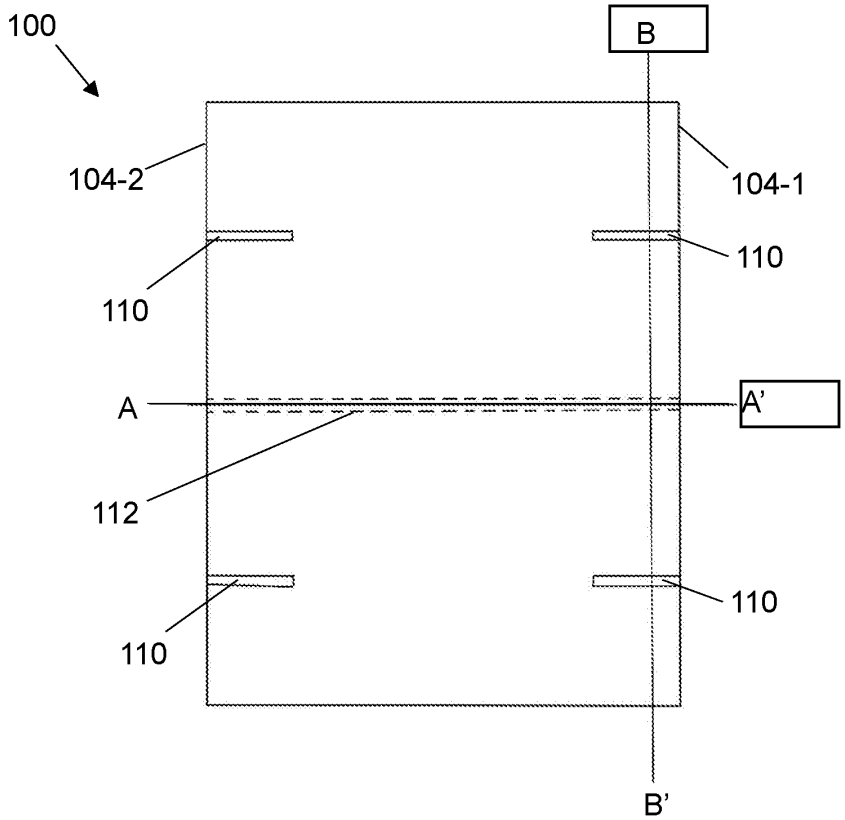

Figure 1B

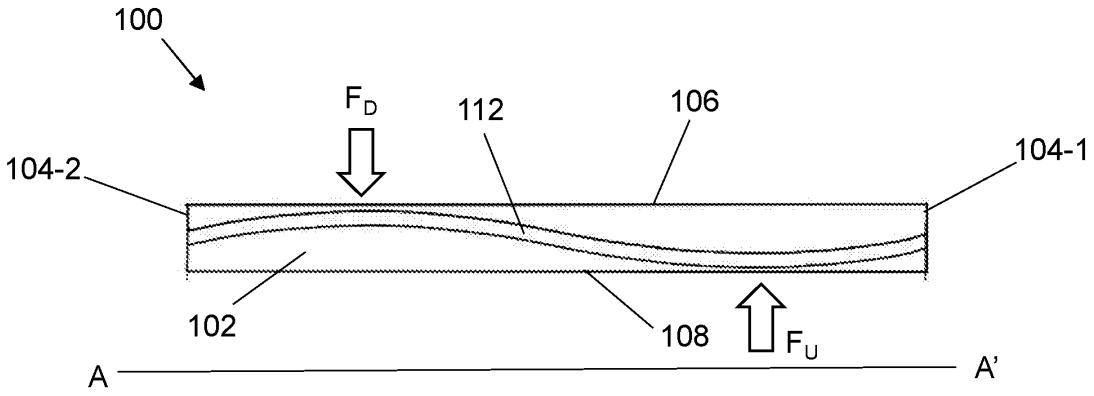

Figure 1C

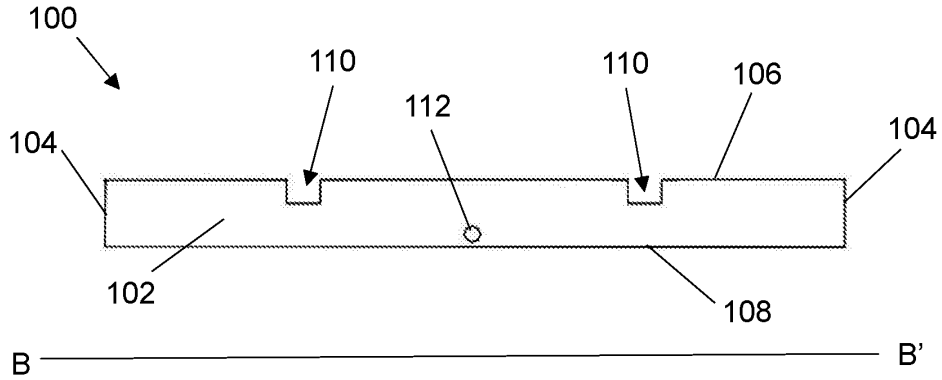

Figure 1D

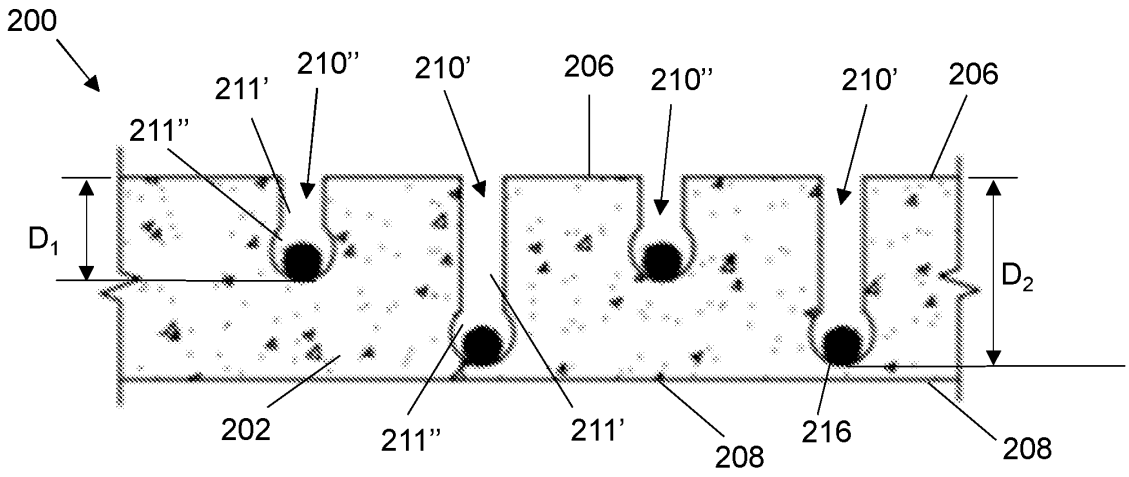

Figure 2

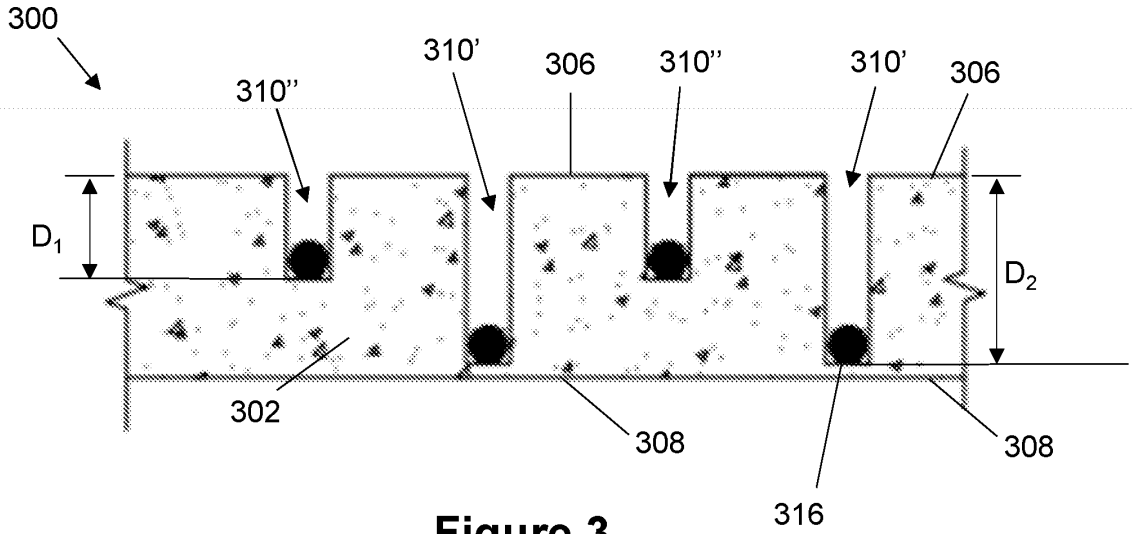

Figure 3

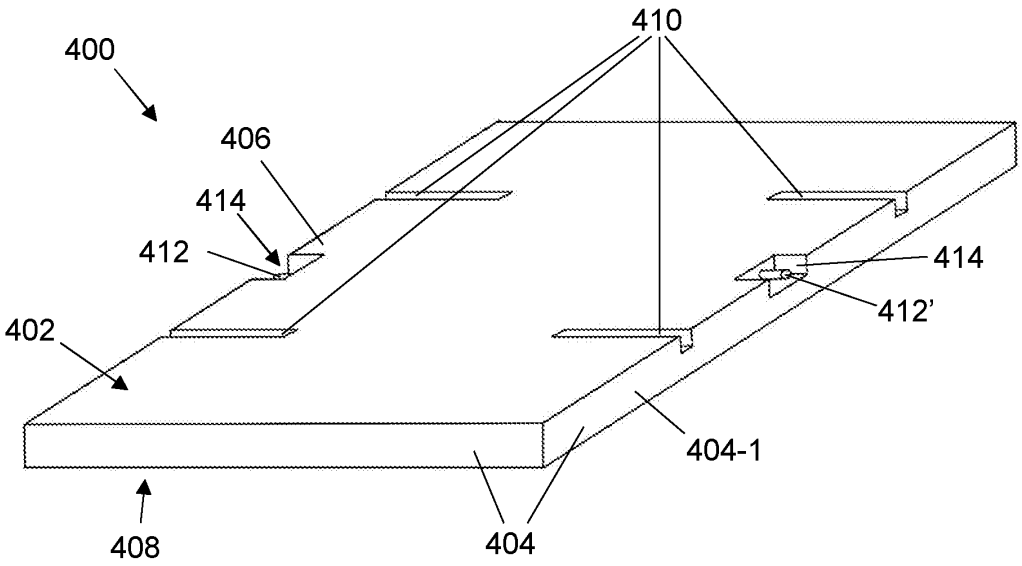

Figure 4A

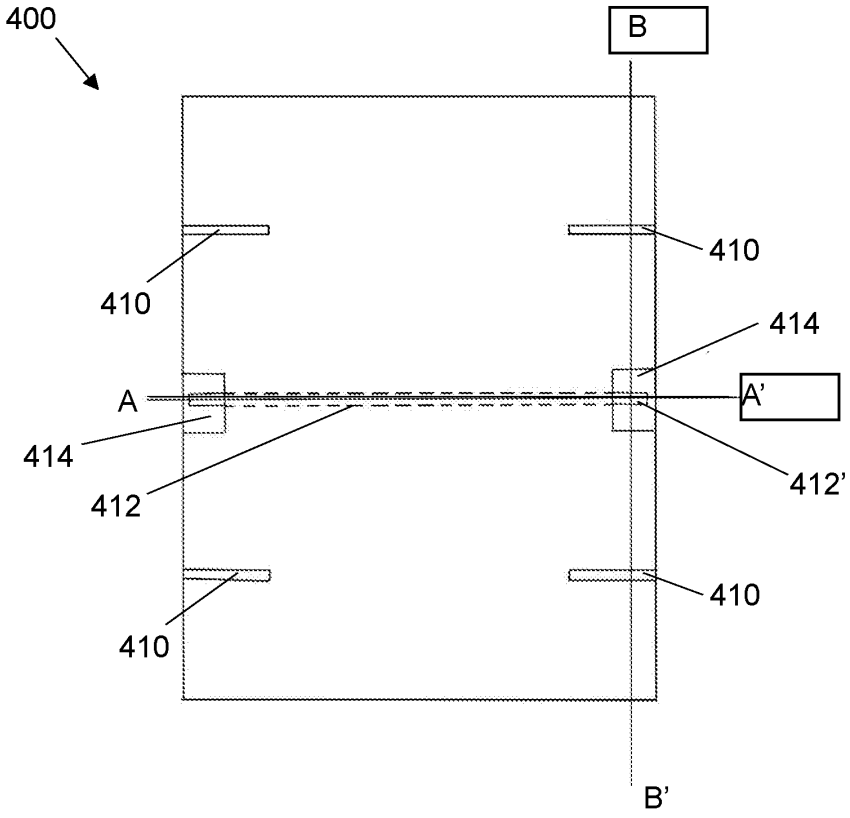

Figure 4B

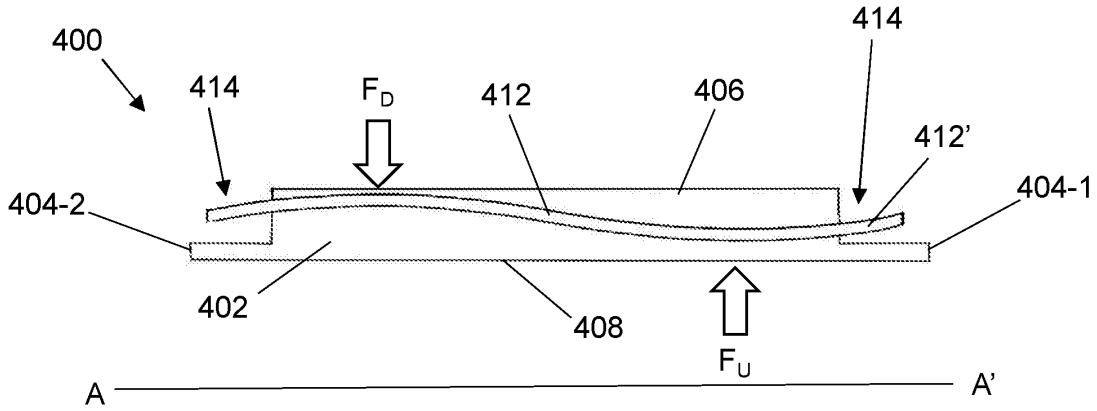

Figure 4C

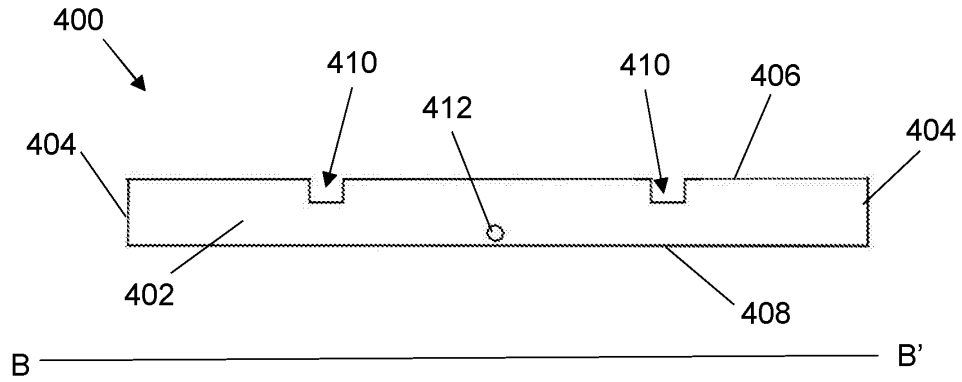

Figure 4D

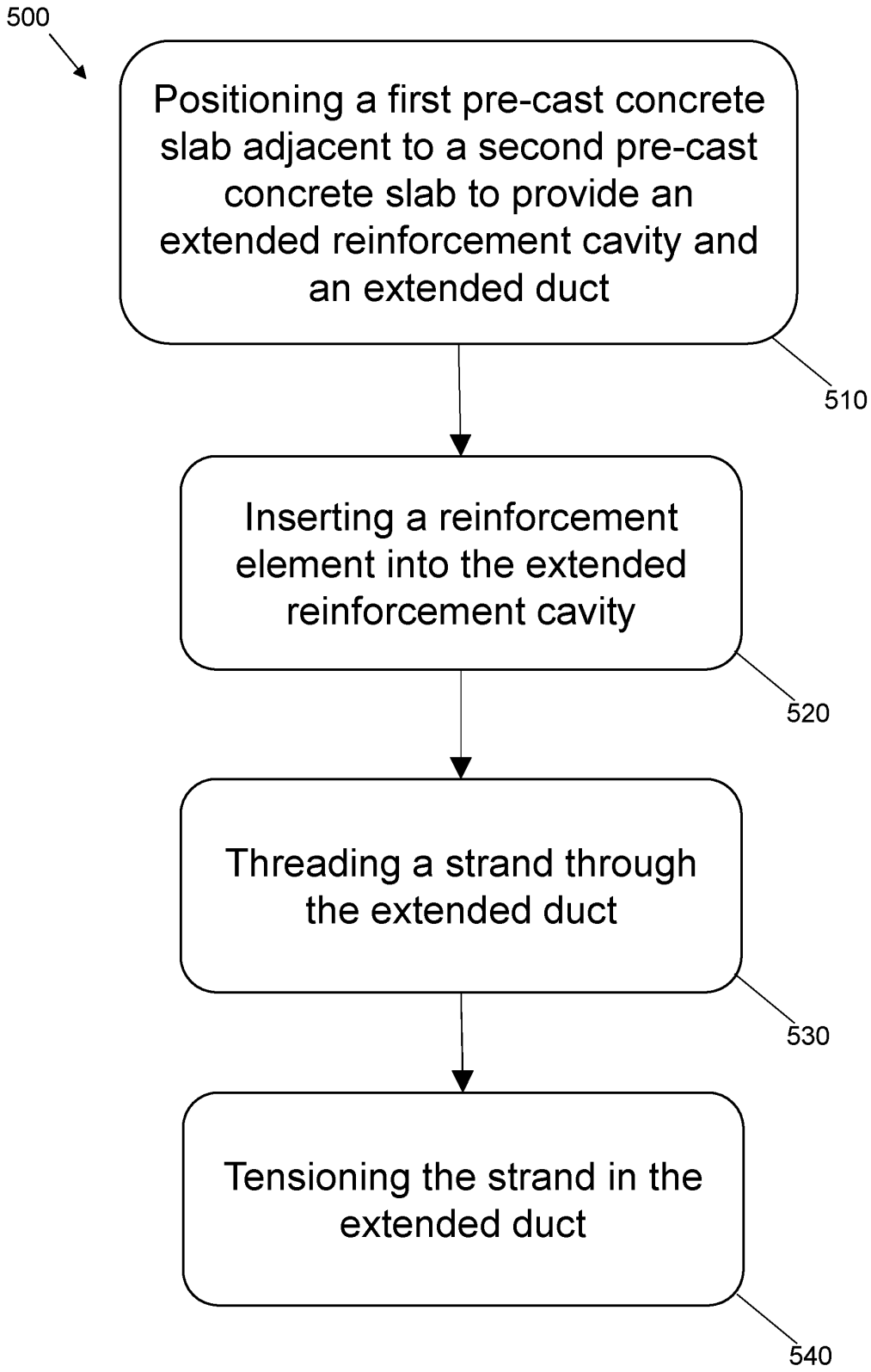
500
Positioning a first pre-cast concrete slab adjacent to a second pre-cast concrete slab to provide an extended reinforcement cavity and an extended duct
510
Inserting a reinforcement element into the extended reinforcement cavity
520
Threading a strand through the extended duct
530
Tensioning the strand in the extended duct
540

Figure 5

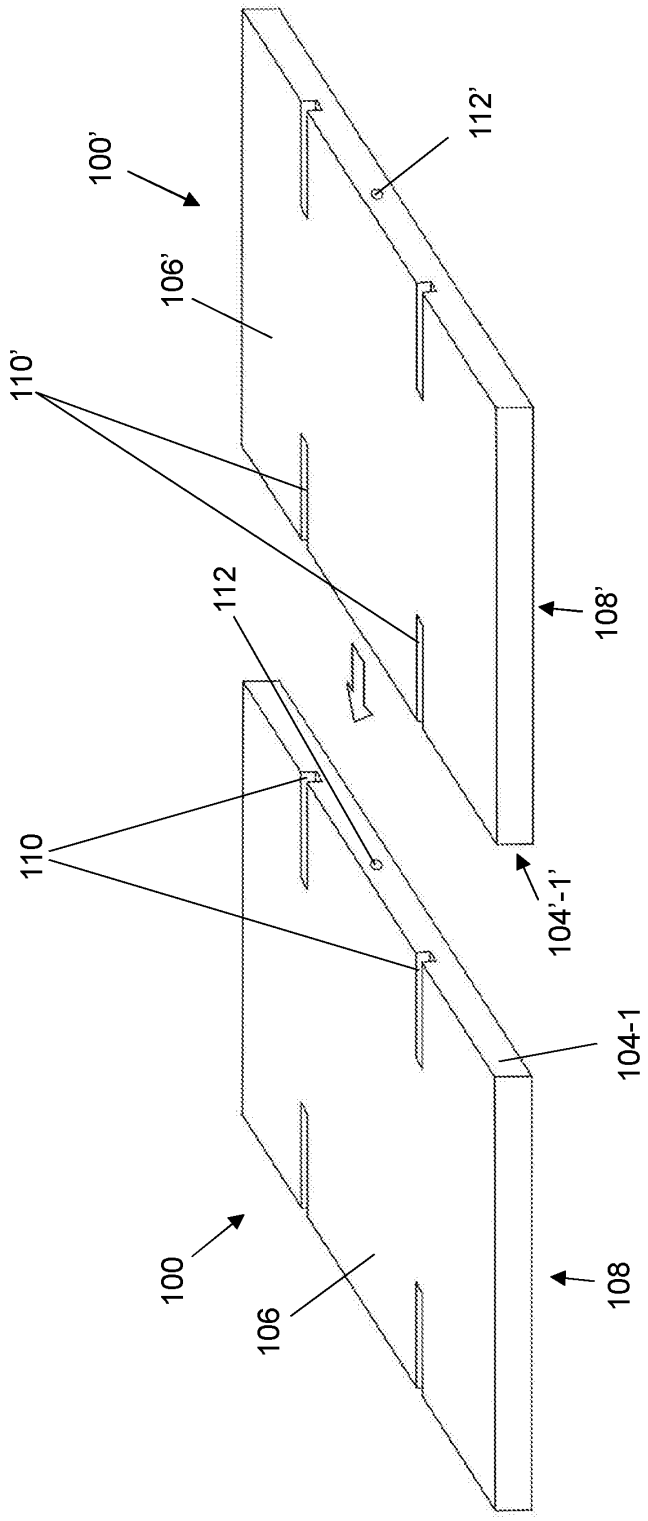

Figure 6A

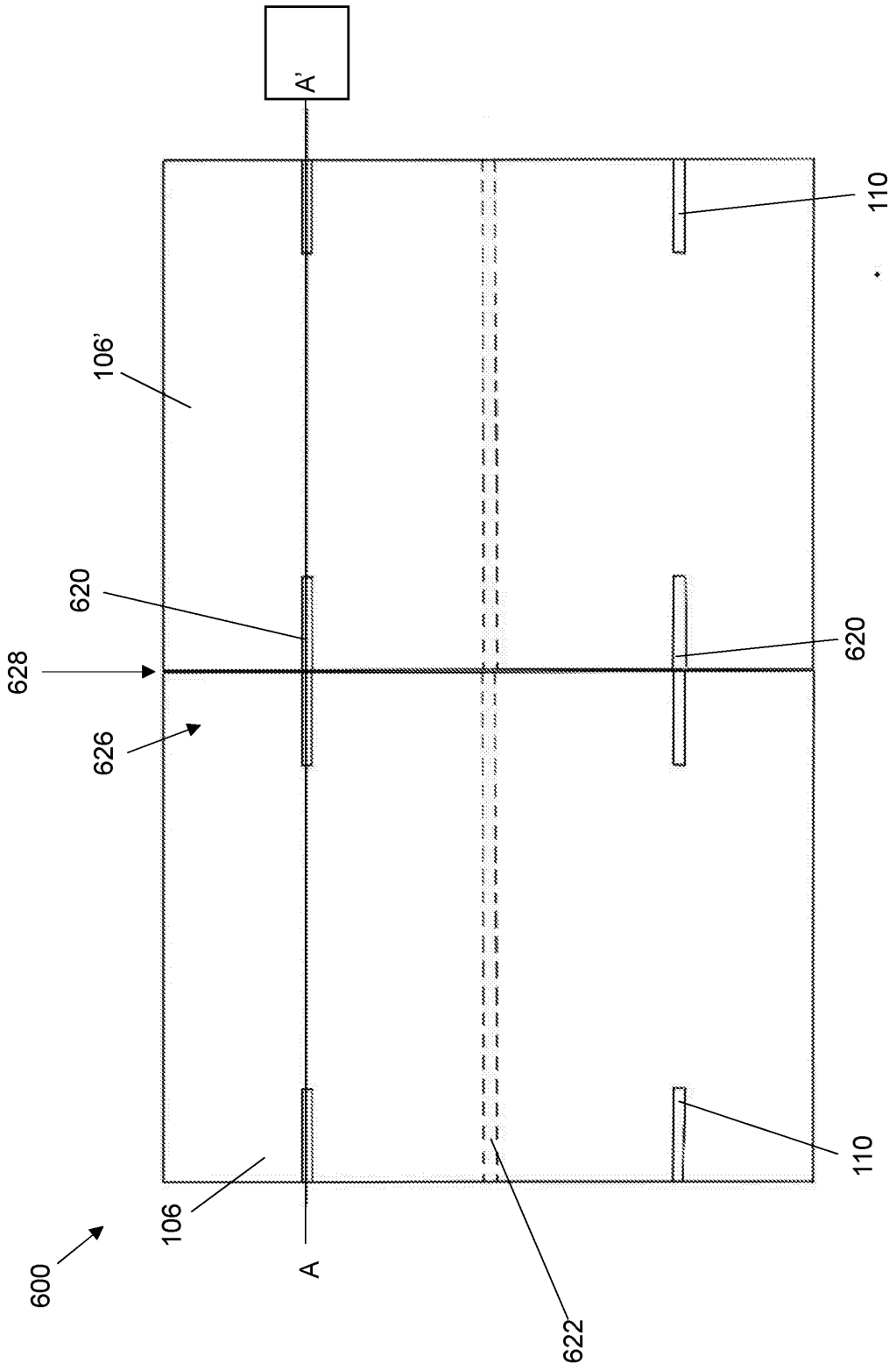

Figure 6B

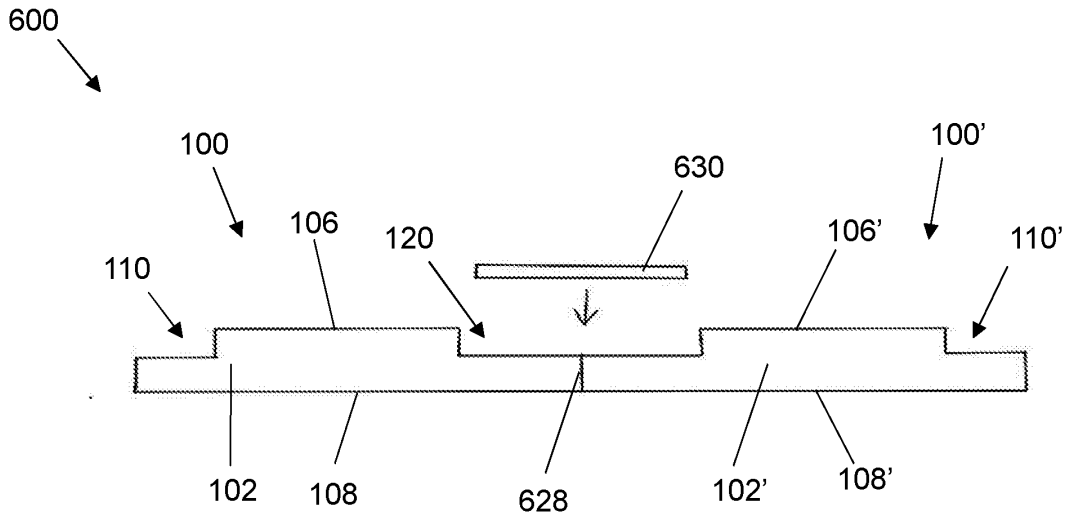

Figure 6C

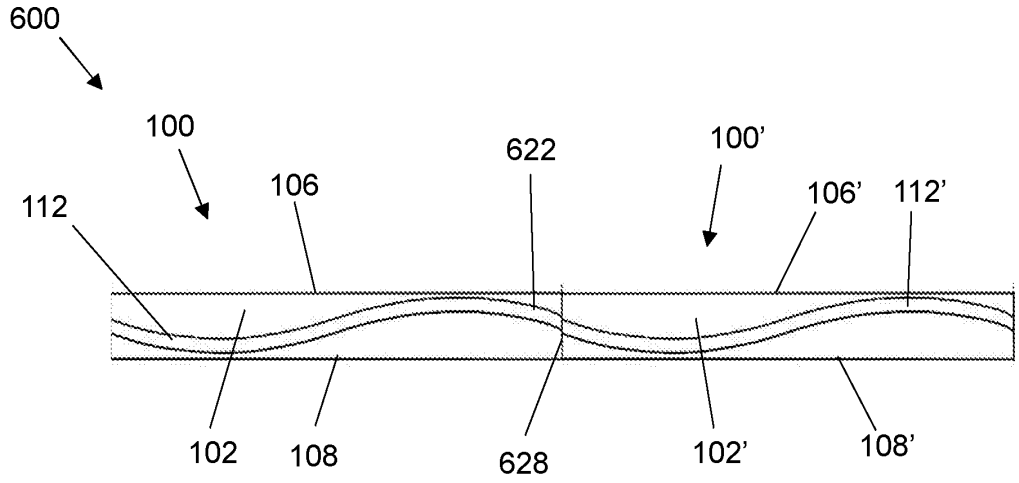

Figure 6D

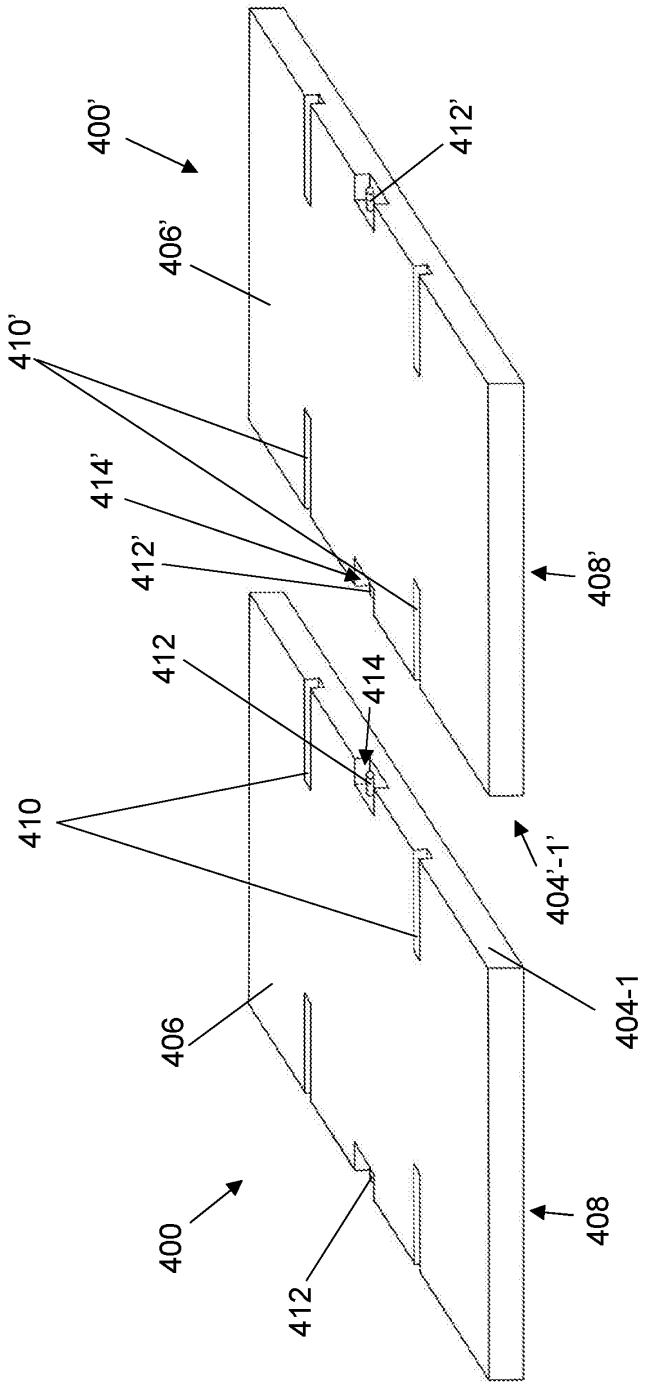
400'
412'
406'
410'
414'
412'
408'
412
414
410
404'-1'
406
404-1
400
412
408

Figure 7A

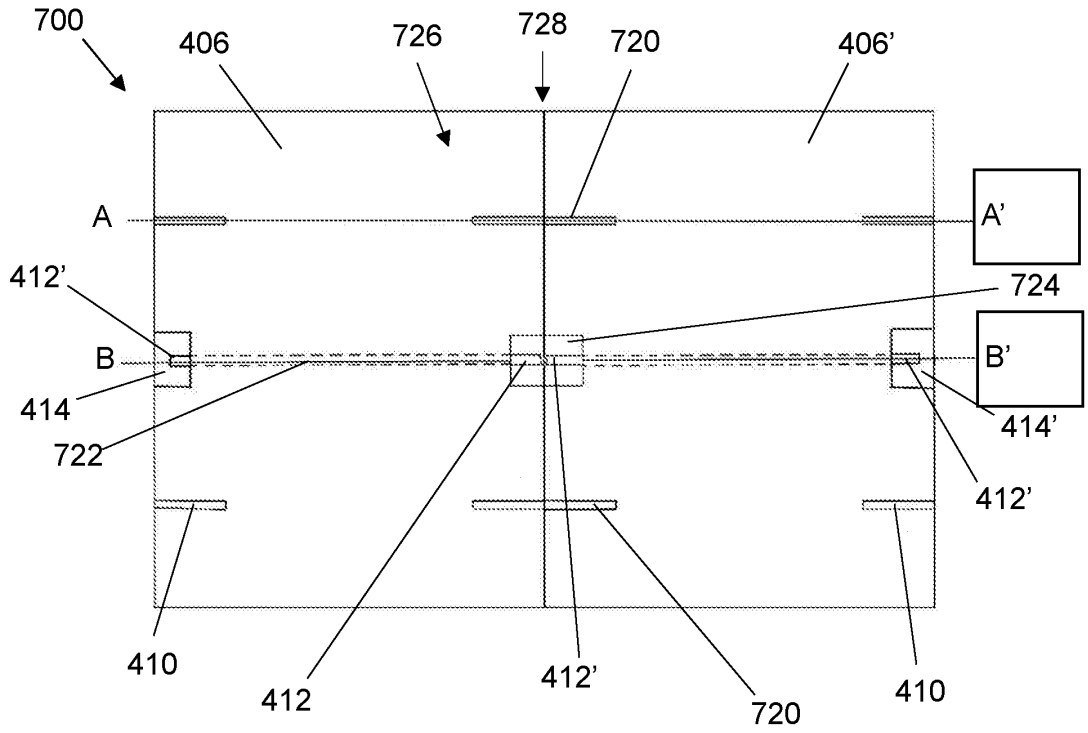

Figure 7B

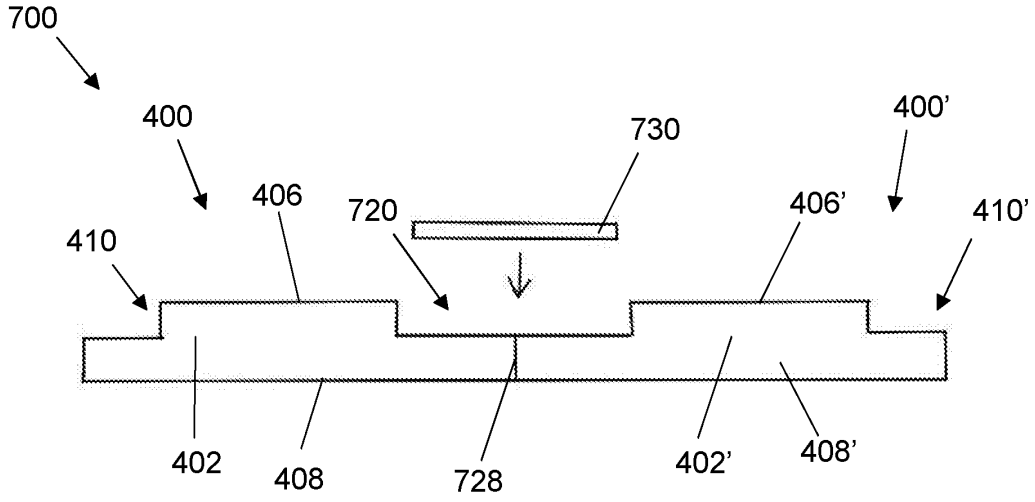

Figure 7C

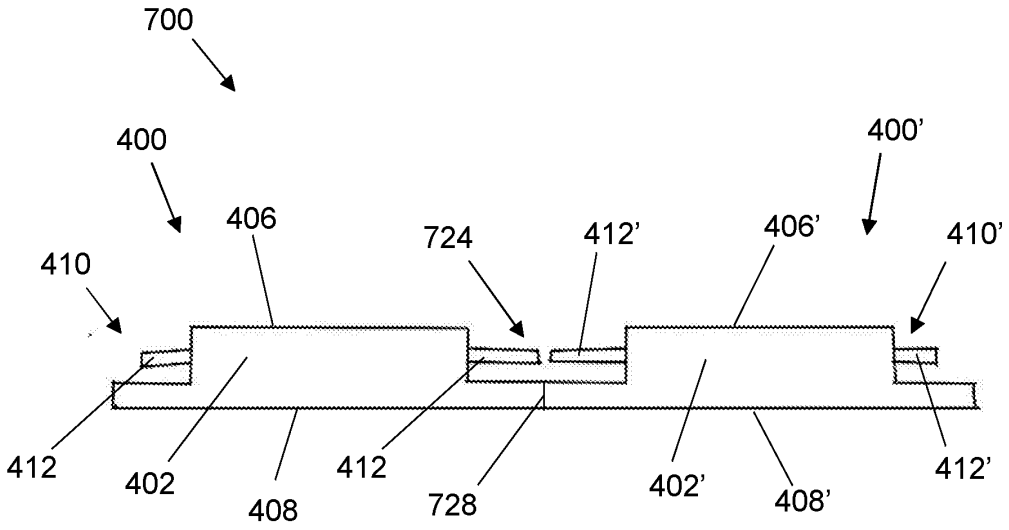

Figure 7D

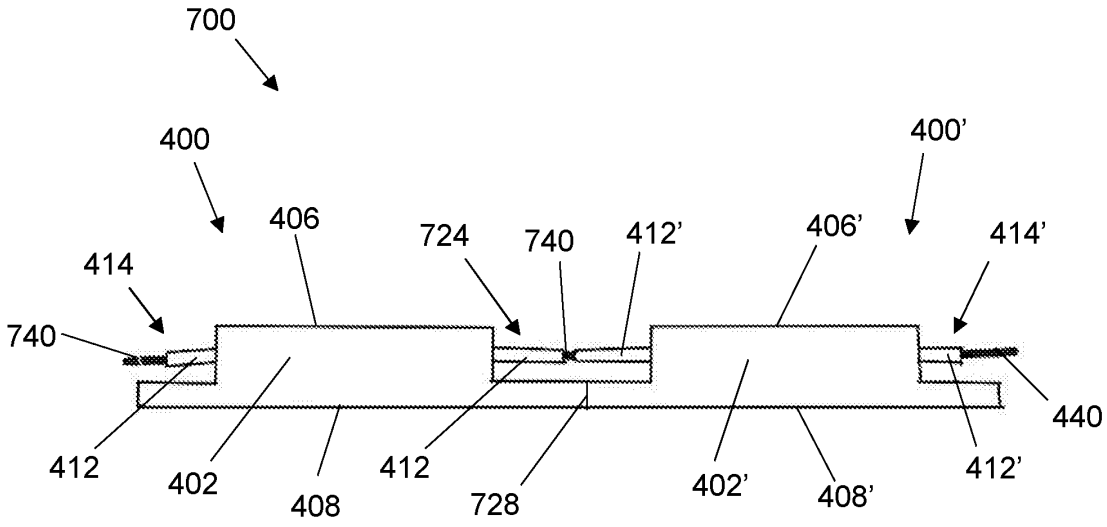

Figure 7E

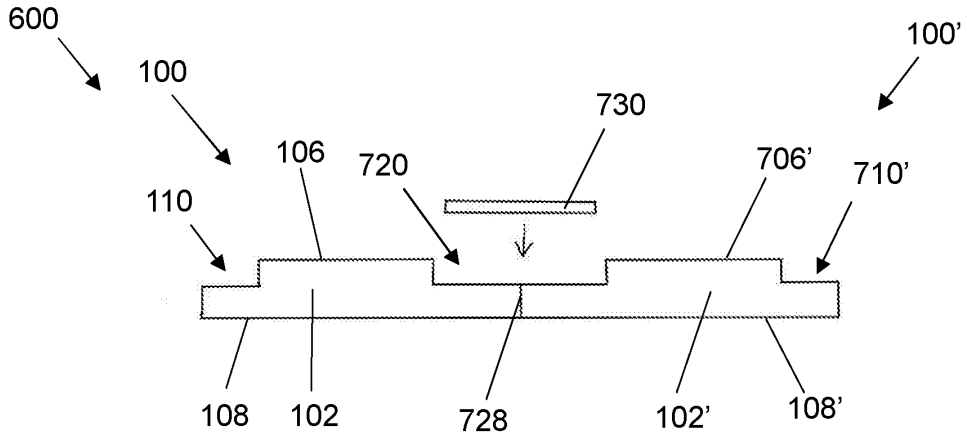

Figure 8A

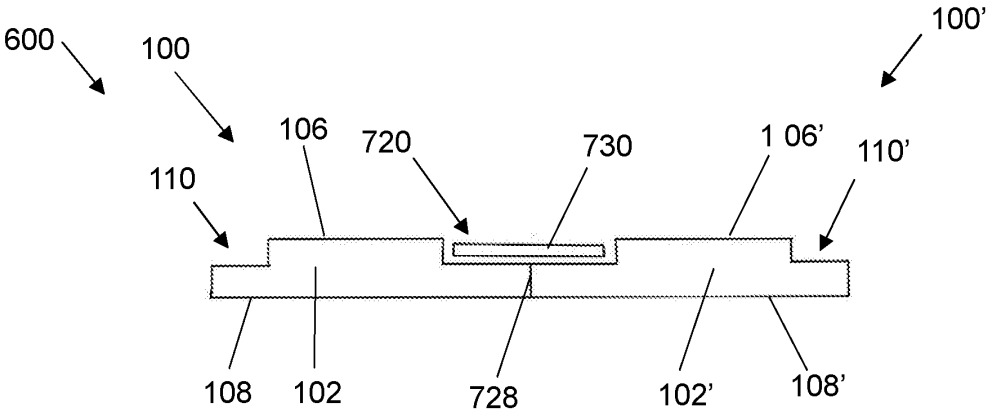

Figure 8B

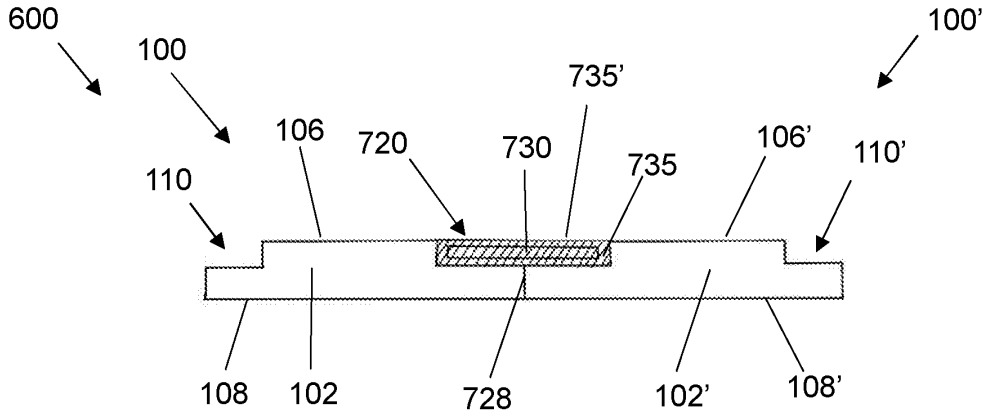

Figure 8C

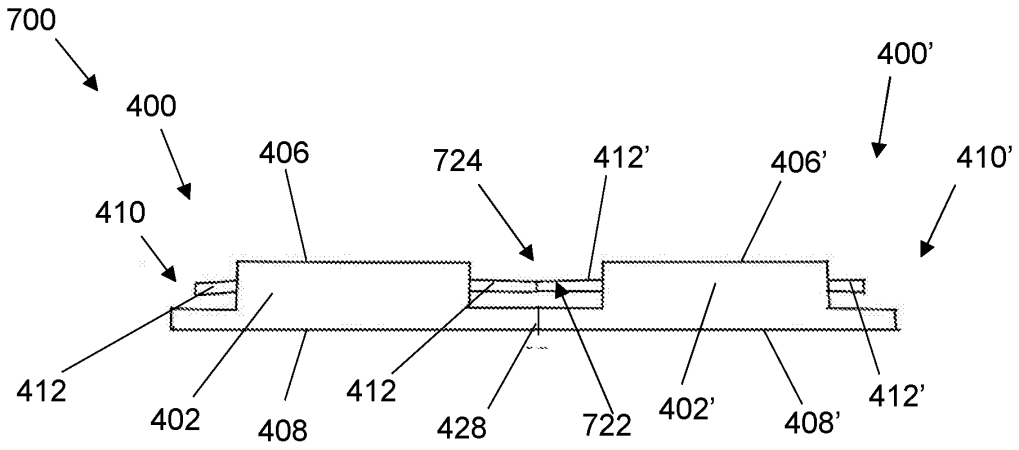

Figure 9A

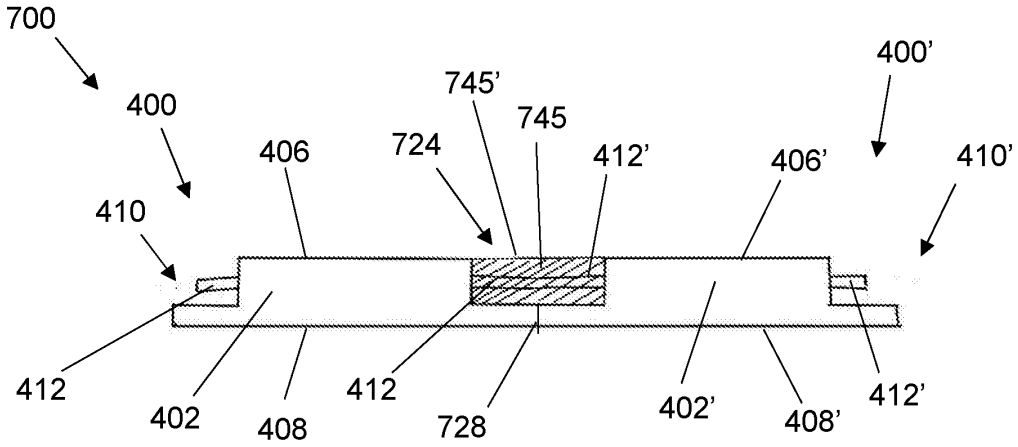

Figure 9B

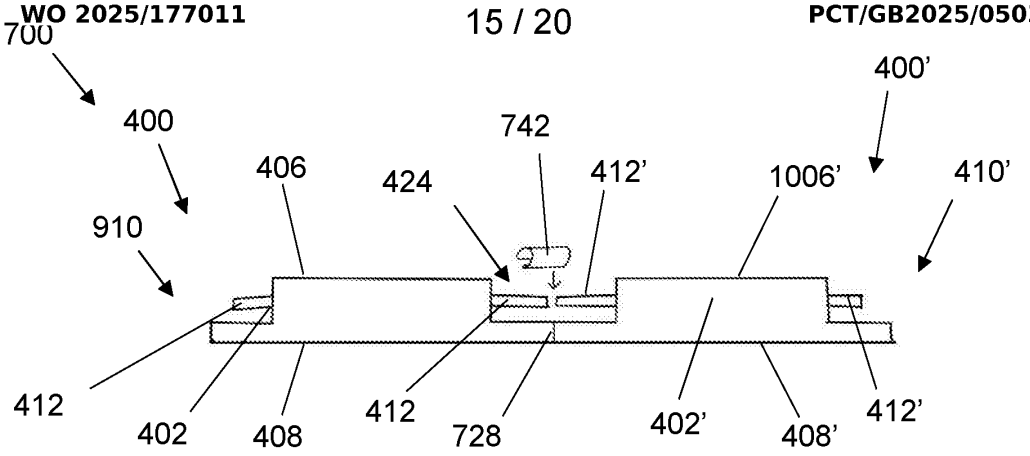

Figure 10A

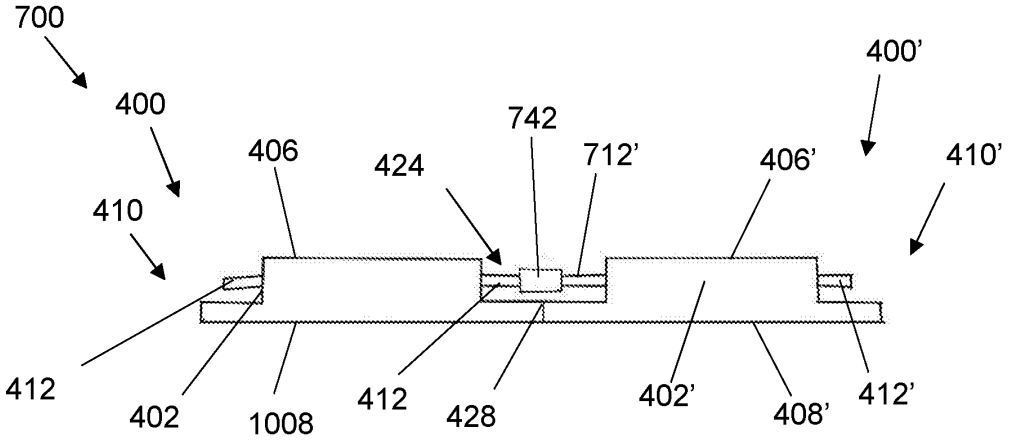

Figure 10B

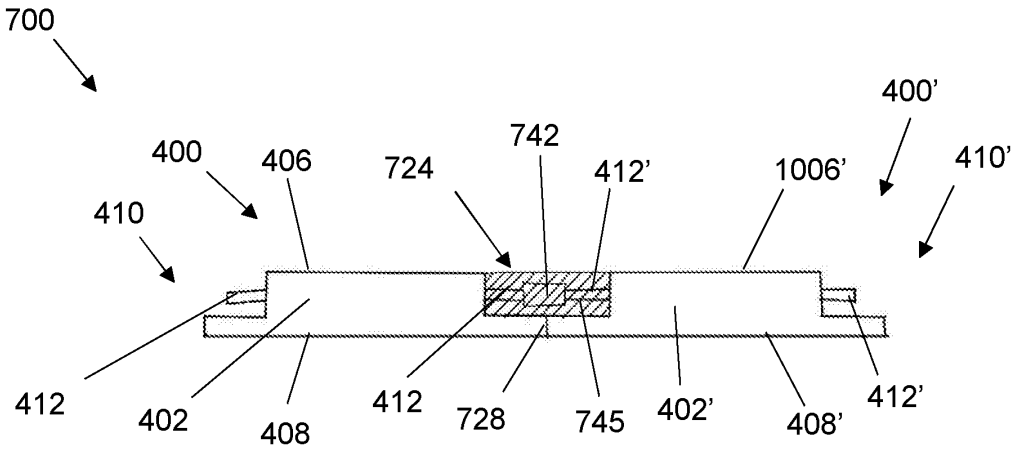

Figure 10C

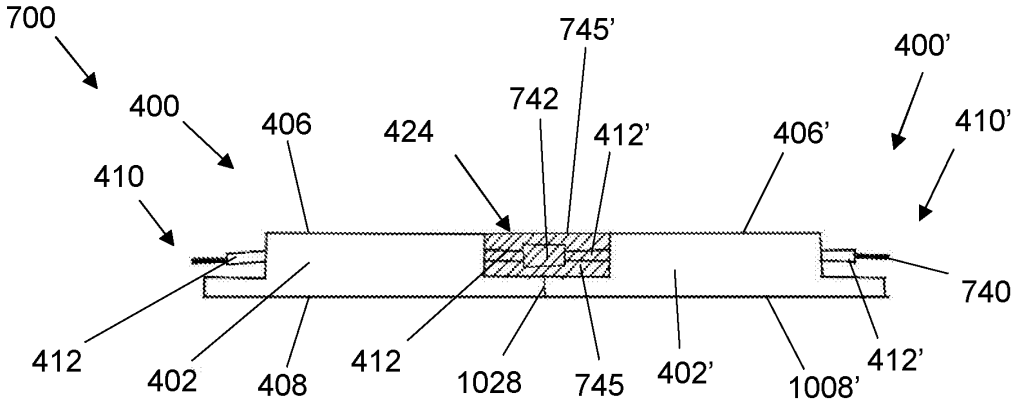

Figure 10D

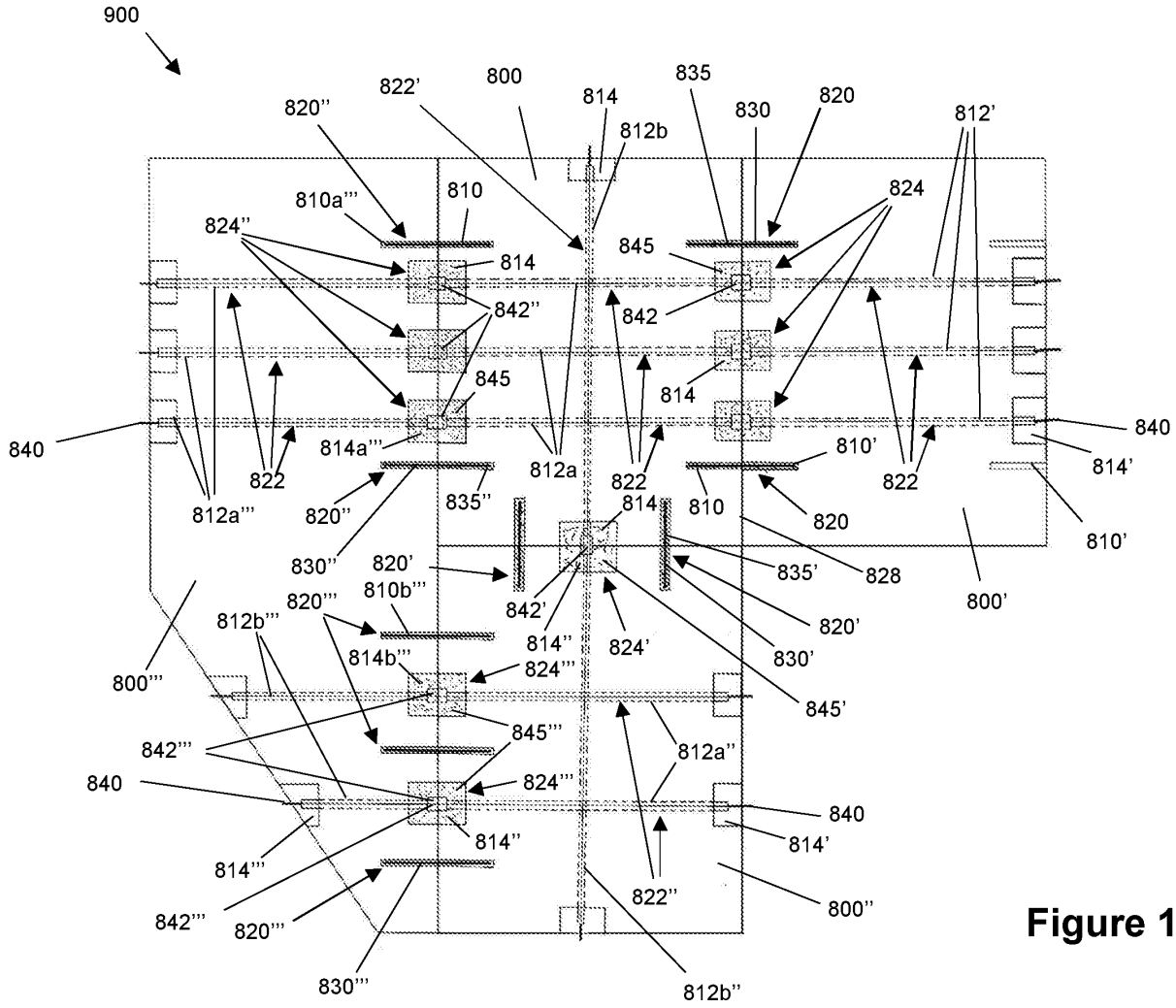
900
822'
800
814
835
820''
830
820
812'
812b
824
810a'''
810
824''
845
814
842''
842
845
814
840
840
814a'''
822
812a
822
810'
822
814'
812a'''
820''
835''
814
810
820
810'
830''
820'
835'
828
800'
820'''
810b'''
842'
820'
812b'''
814''
824'
830'
814b'''
824'''
800'''
845'
845'''
842'''
812a''
840
824'''
840
814''
814'
814'''
822''
842'''
820'''
800''
830'''
812b''

Figure 11

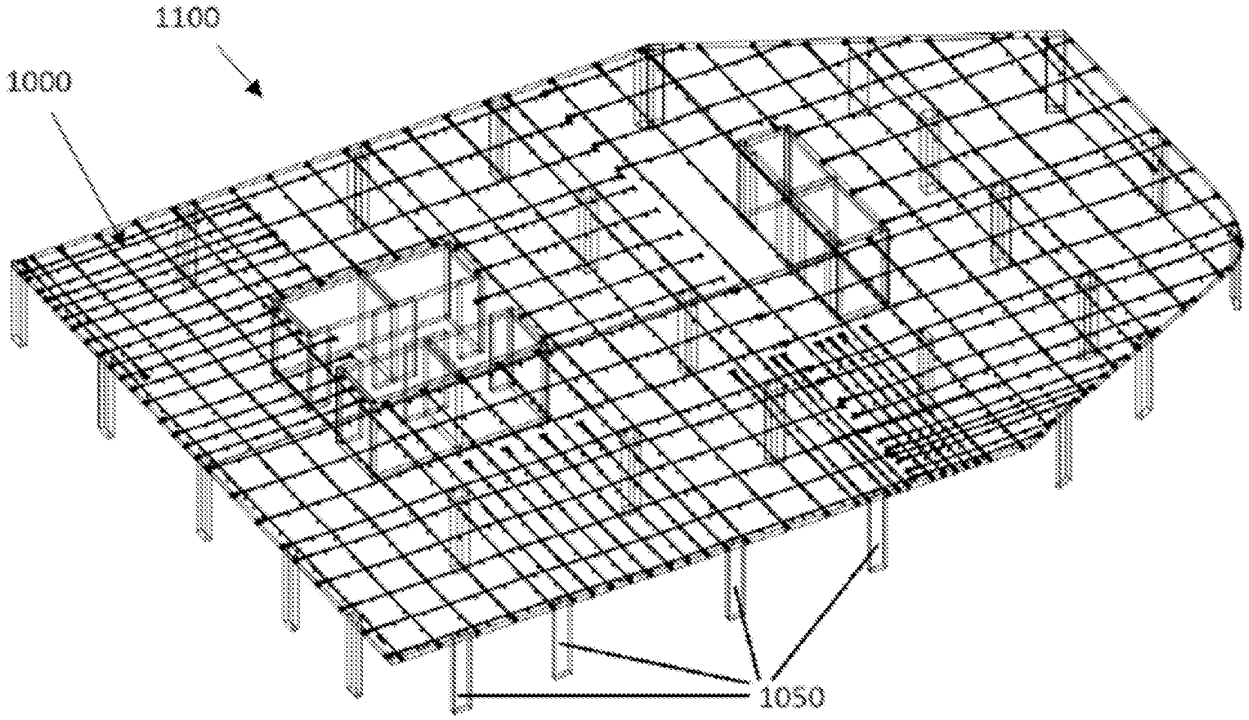

Figure 12

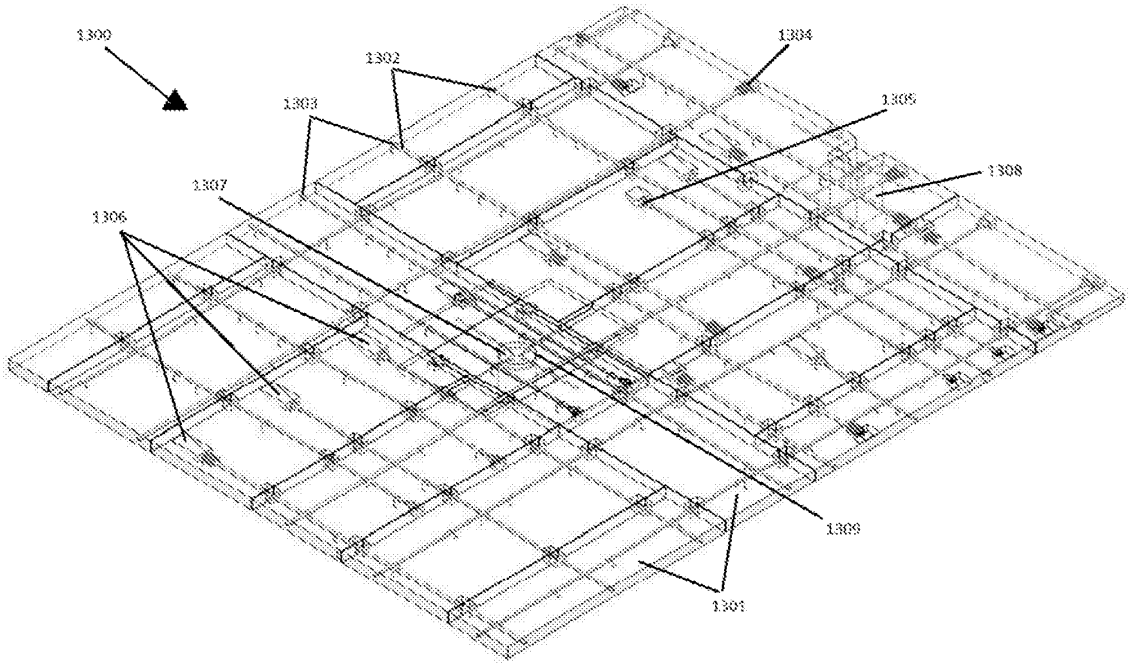

Figure 13

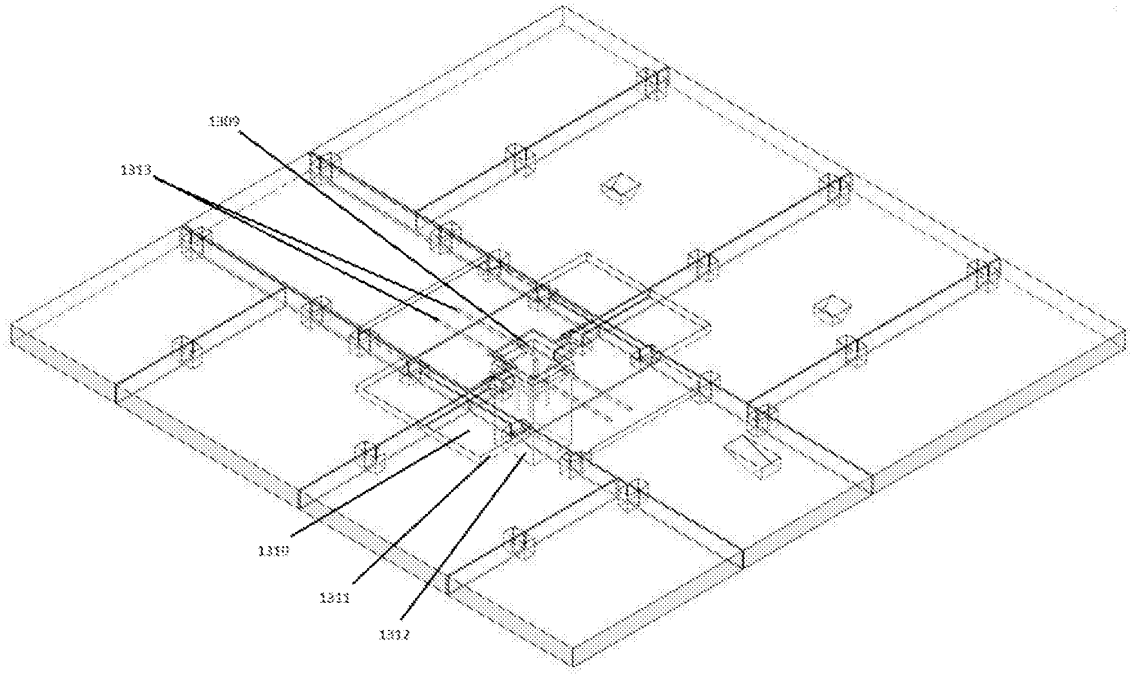

Figure 14

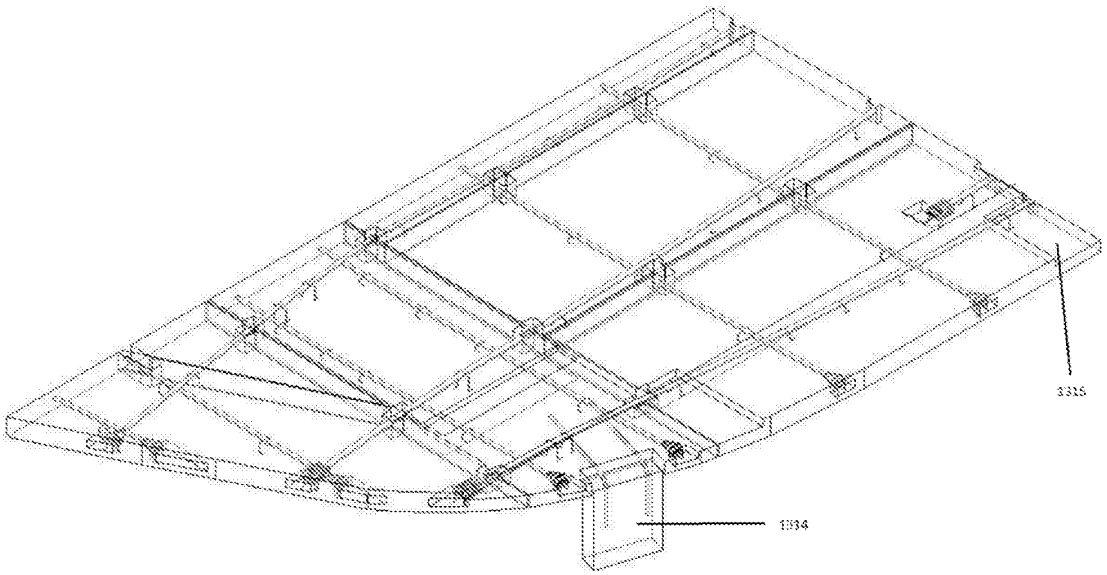

Figure 15

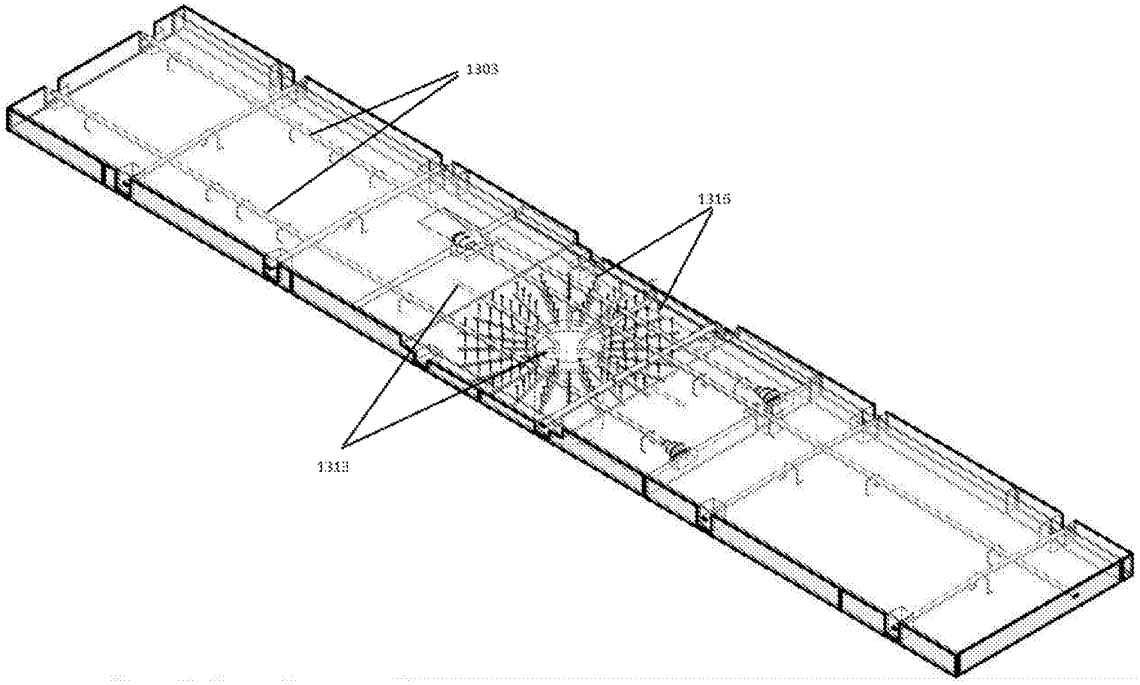

Figure 16