FIG. 1
PRIOR ART

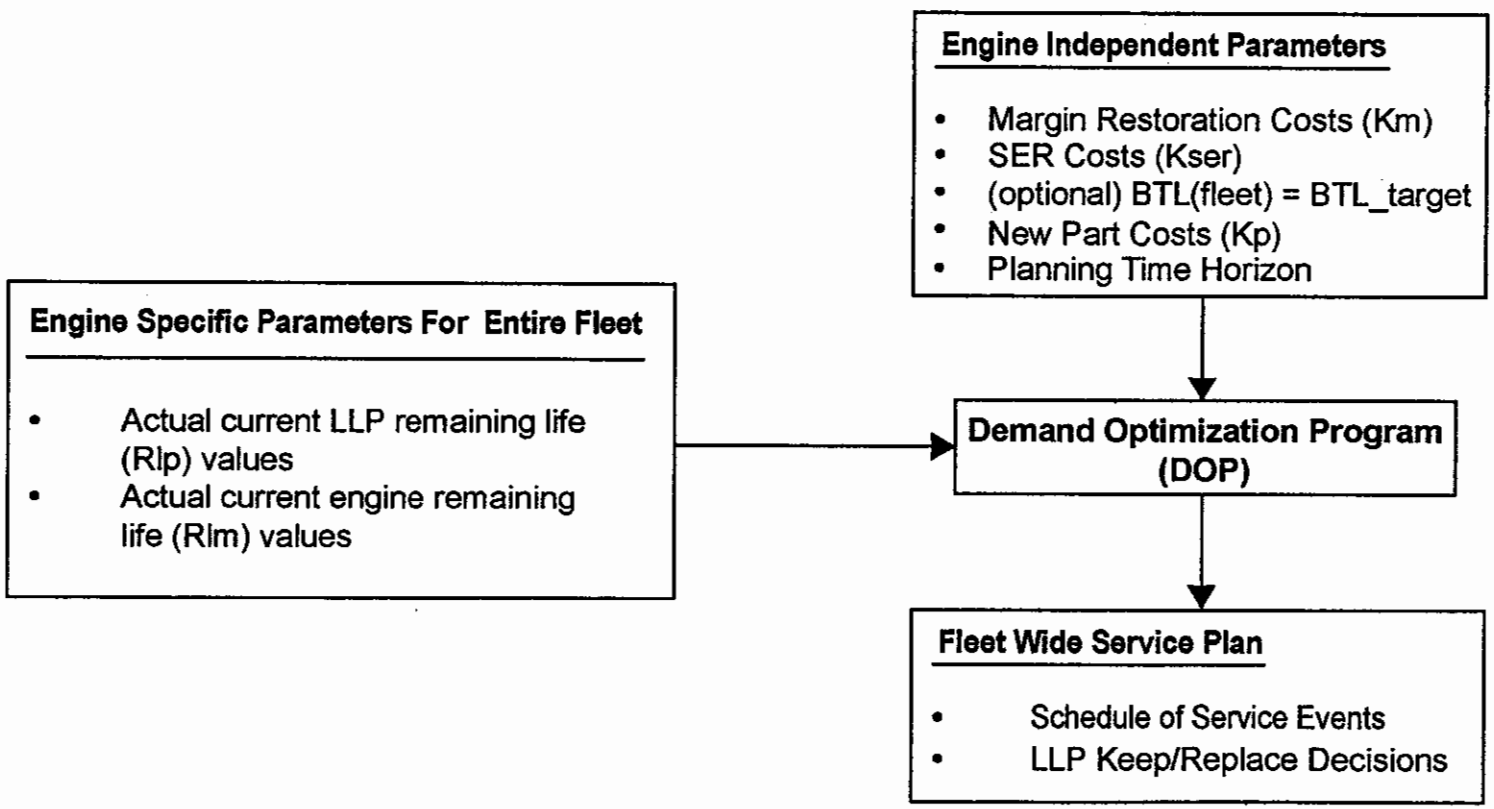

FIG. 2

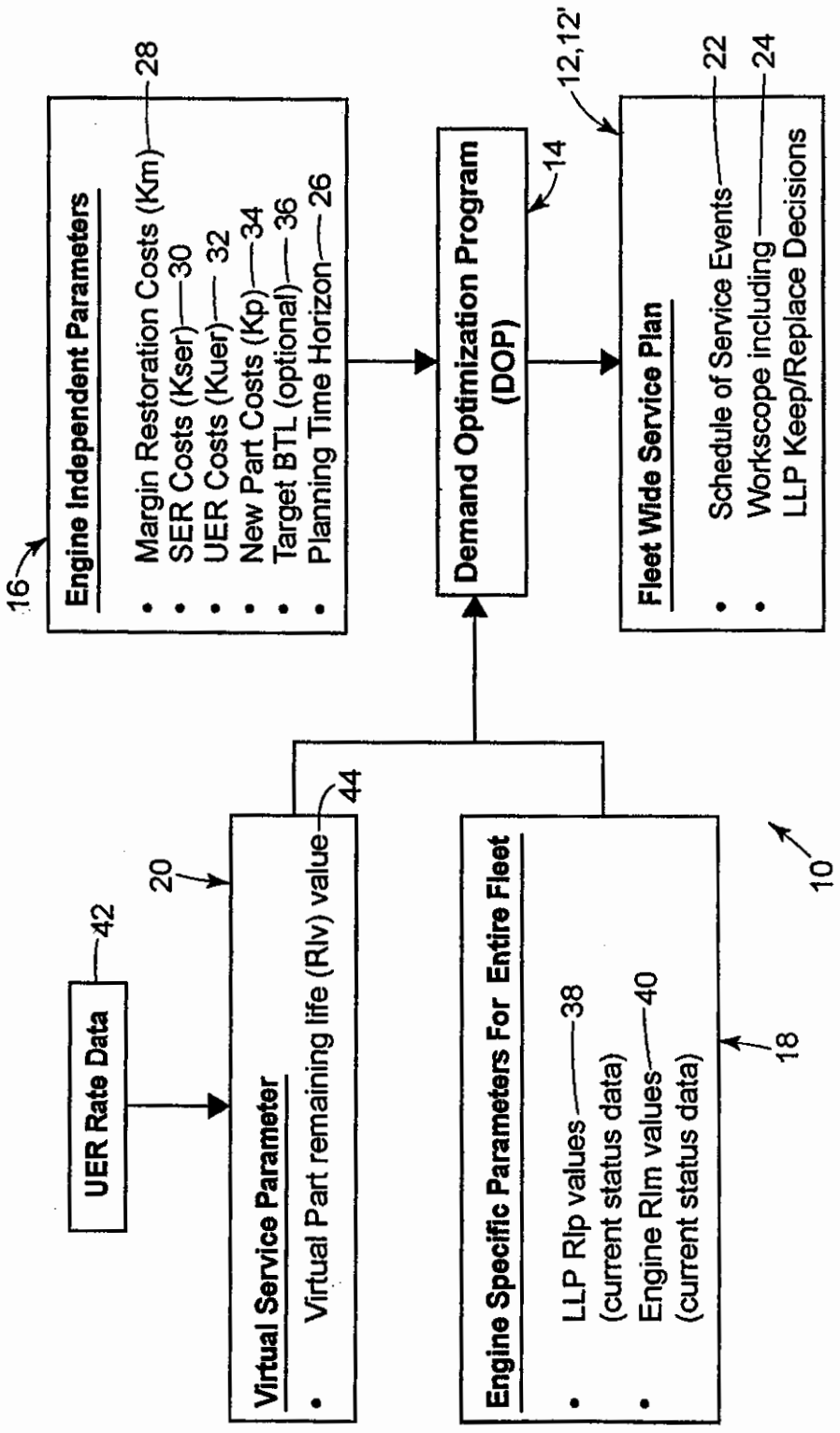
Engine Independent Parameters
Margin Restoration Costs (Km)
SER Costs (Kser)
UER Costs (Kuer)
New Part Costs (Kp)
Target BTL (optional)
Planning Time Horizon
16
28
30
32
34
36
26
Demand Optimization Program (DOP)
14
12,12'
Fleet Wide Service Plan
Schedule of Service Events
Workscope including LLP Keep/Replace Decisions
22
24
UER Rate Data
42
20
Virtual Service Parameter
Virtual Part remaining life (Rlv) value
44
Engine Specific Parameters For Entire Fleet
LLP Rlp values (current status data)
Engine Rlm values (current status data)
38
40
18
10

FIG. 3

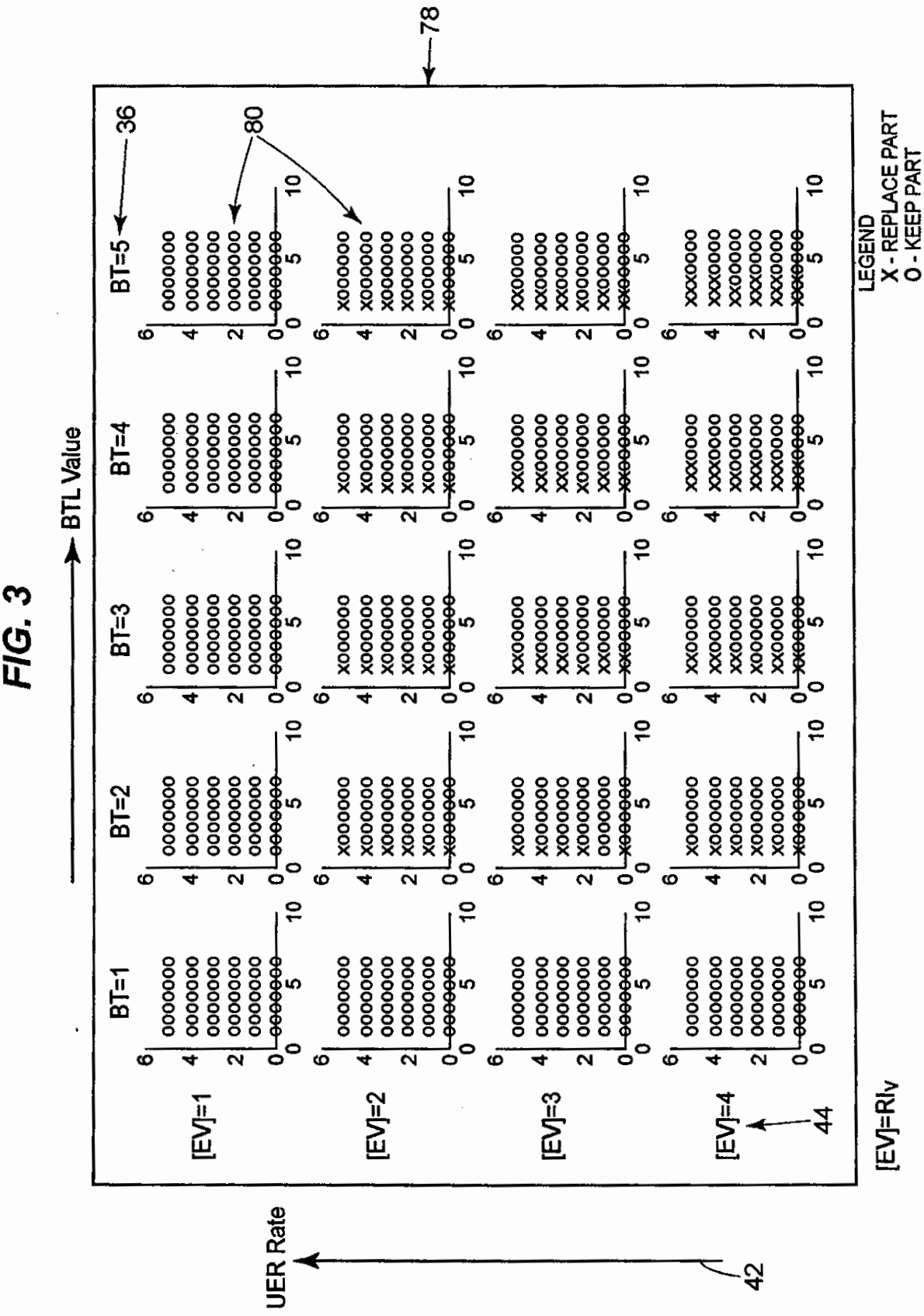
BTL Value
UER Rate
BT=1
BT=2
BT=3
BT=4
BT=5
[EV]=1
[EV]=2
[EV]=3
[EV]=4
[EV]=RIV
36
78
80
42
44
LEGEND
X - REPLACE PART
O - KEEP PART

FIG. 4

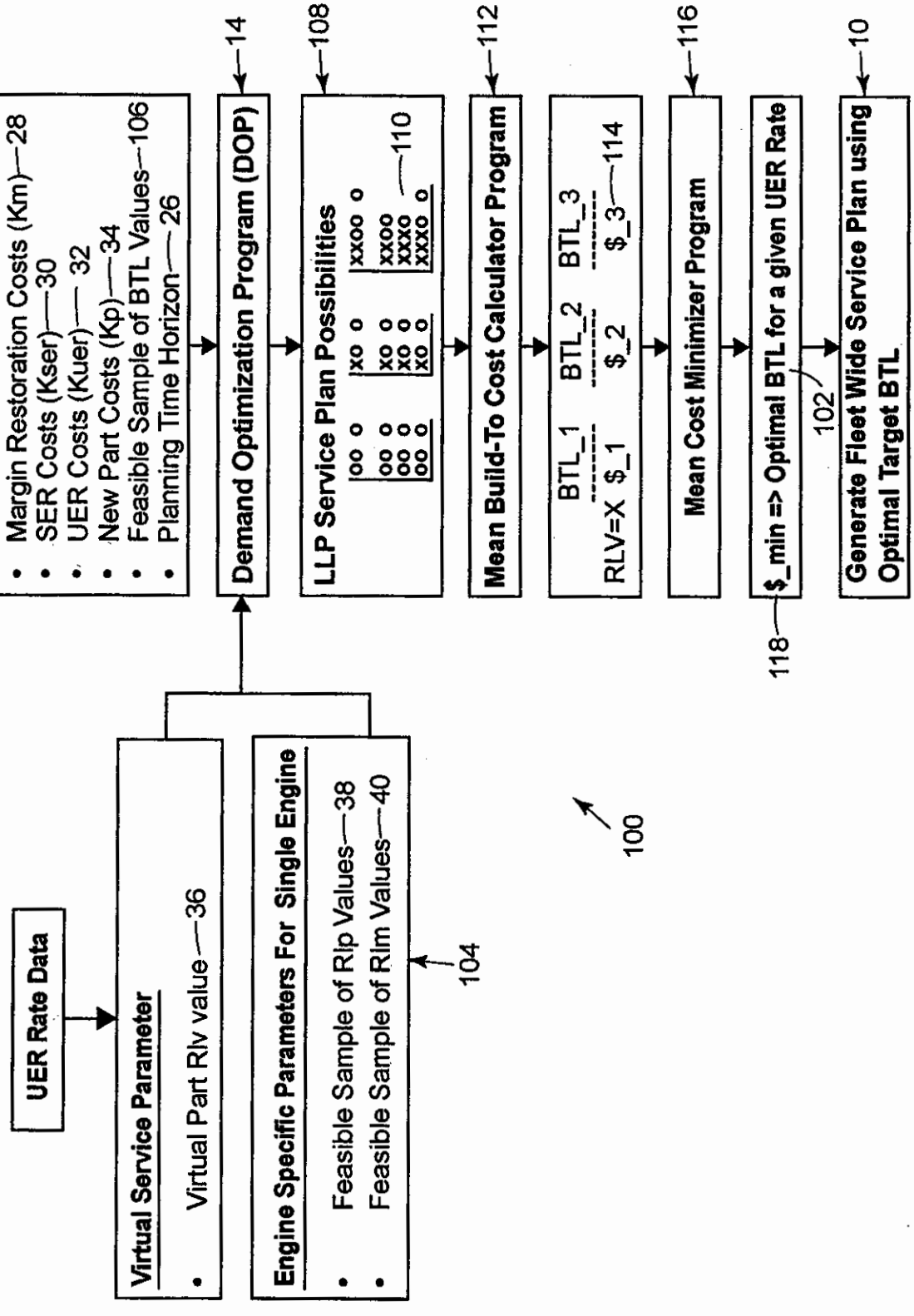
UER Rate Data
Virtual Service Parameter
• Virtual Part Rlv value —36
Engine Specific Parameters For Single Engine
• Feasible Sample of Rlp Values —38
• Feasible Sample of Rlm Values —40
104
100
Engine Independent Parameters
• Margin Restoration Costs (Km) —28
• SER Costs (Kser) —30
• UER Costs (Kuer) — 32
• New Part Costs (Kp) —34
• Feasible Sample of BTL Values —106
• Planning Time Horizon — 26
Demand Optimization Program (DOP)
14
LLP Service Plan Possibilities
108
110
Mean Build-To Cost Calculator Program
112
BTL_1 BTL_2 BTL_3
RLV=X $_1 $_2 $_3
114
Mean Cost Minimizer Program
116
$_min => Optimal BTL for a given UER Rate
118
102
Generate Fleet Wide Service Plan using Optimal Target BTL
10

FIG. 5

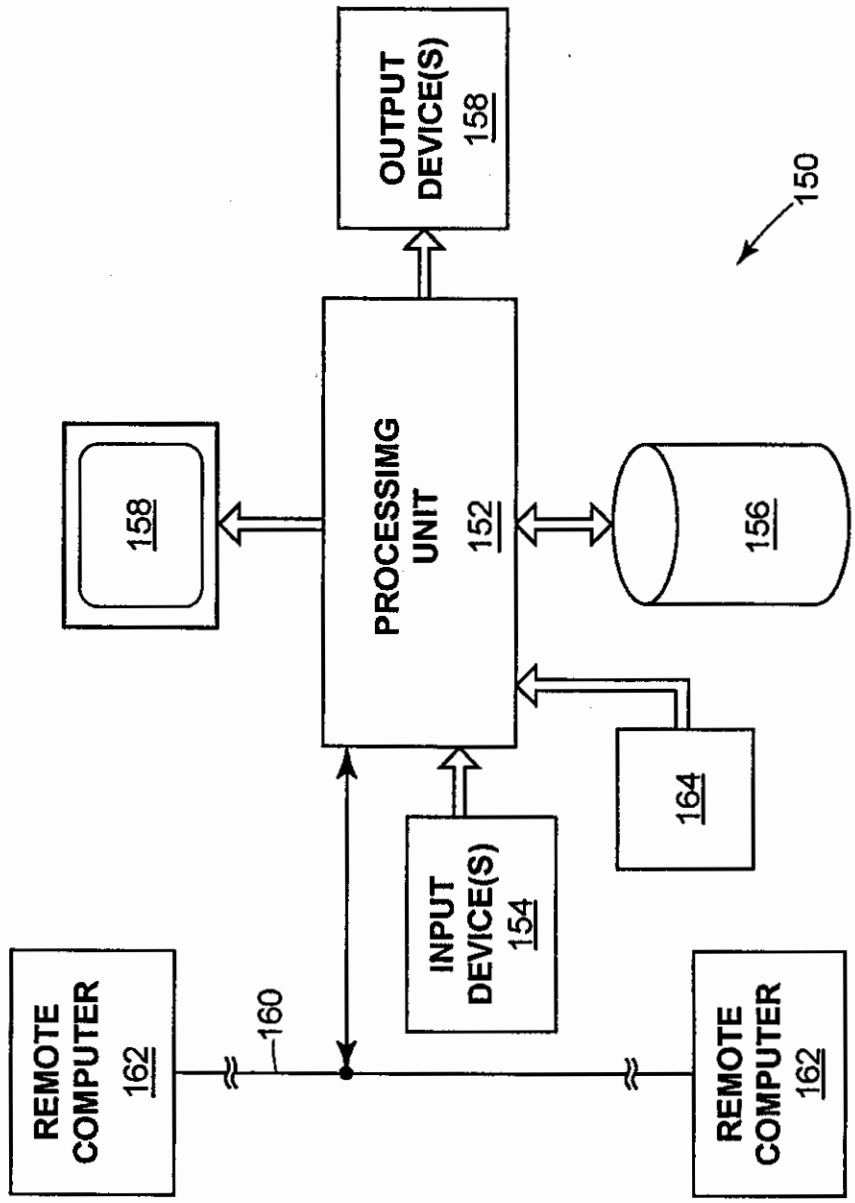
150
OUTPUT DEVICE(S) 158
PROCESSIMG UNIT 152
158
156
164
INPUT DEVICE(S) 154
160
REMOTE COMPUTER 162
REMOTE COMPUTER 162