Fig.1

(a)

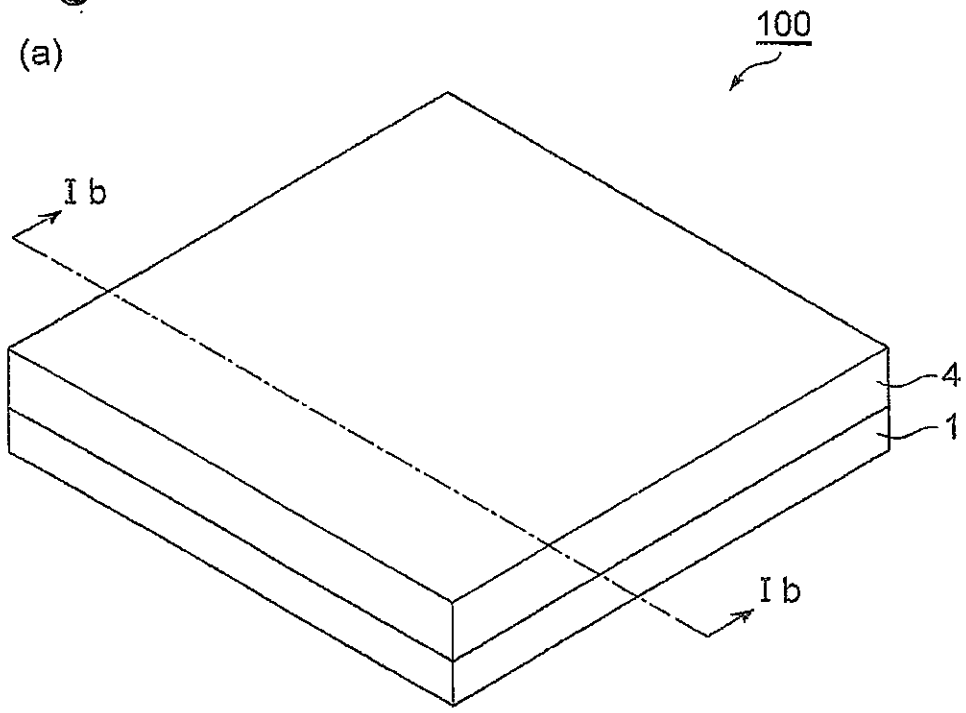

(b)

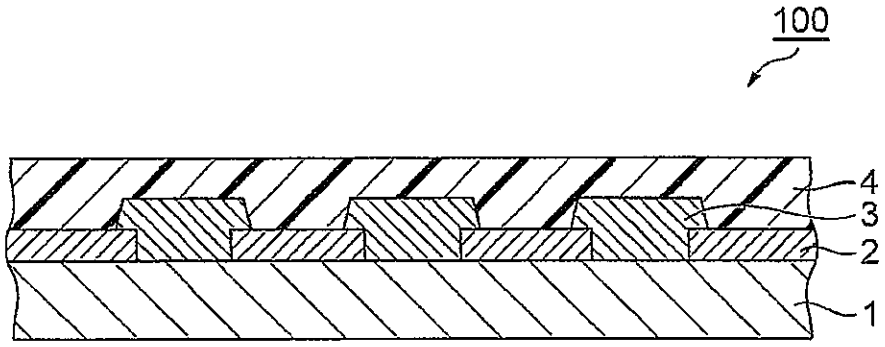

Fig.2

(a)

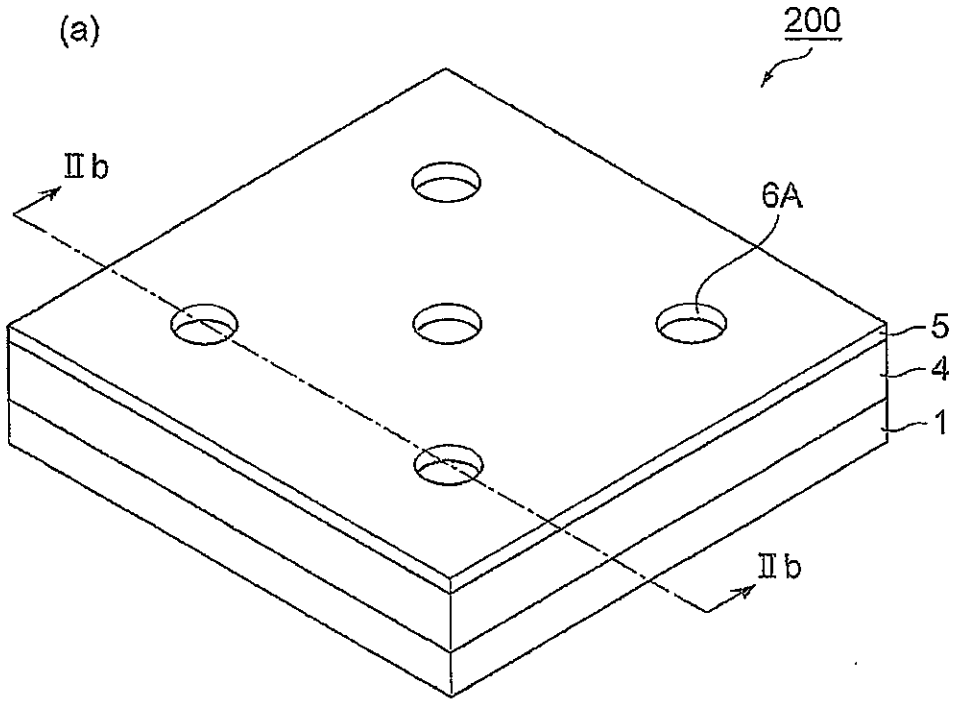

(b)

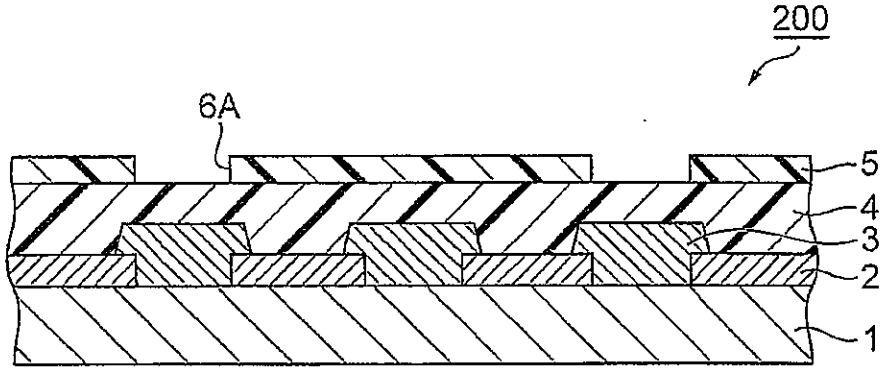

Fig.3

(a)

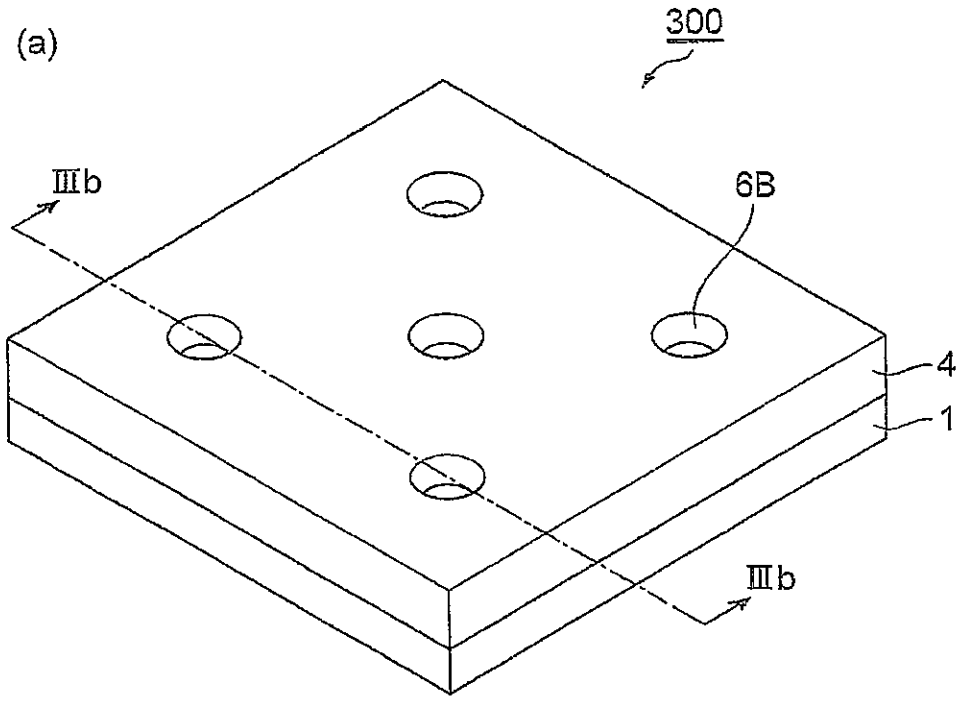

(b)

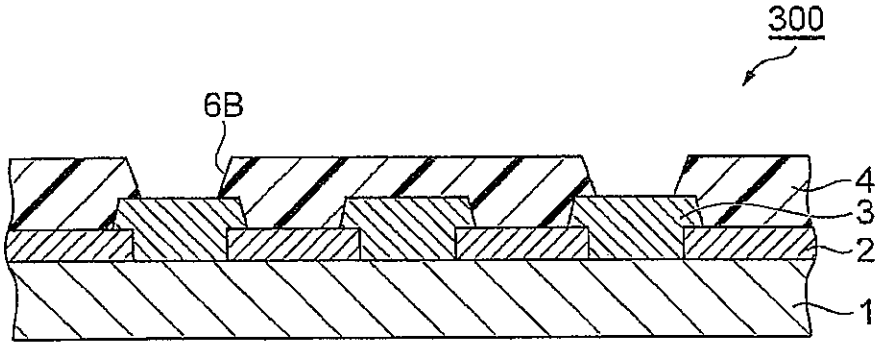

Fig.4

(a)

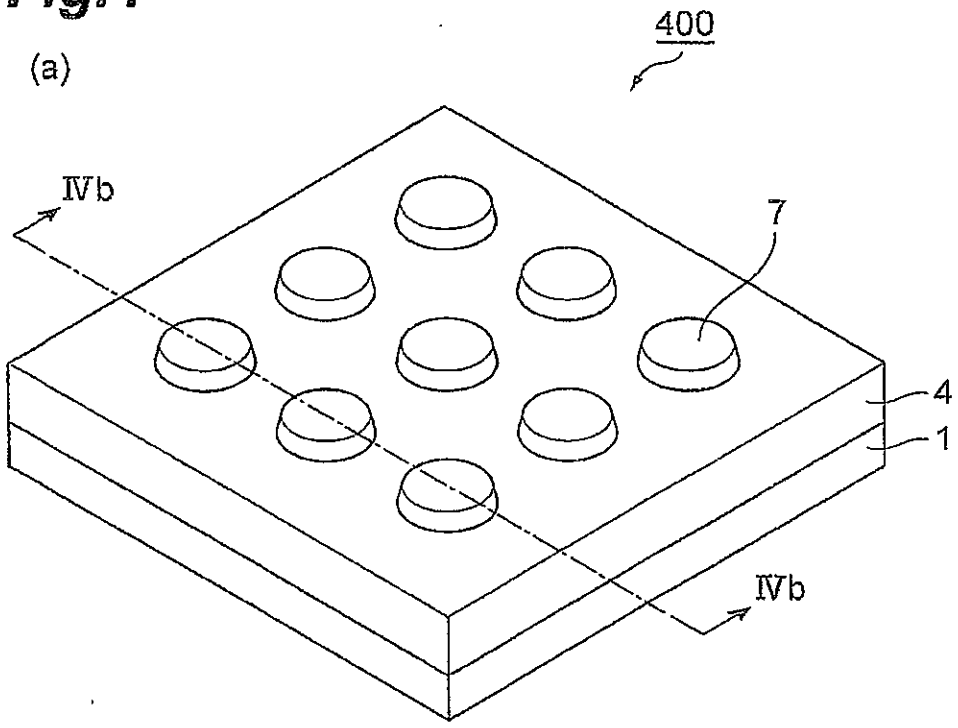

(b)

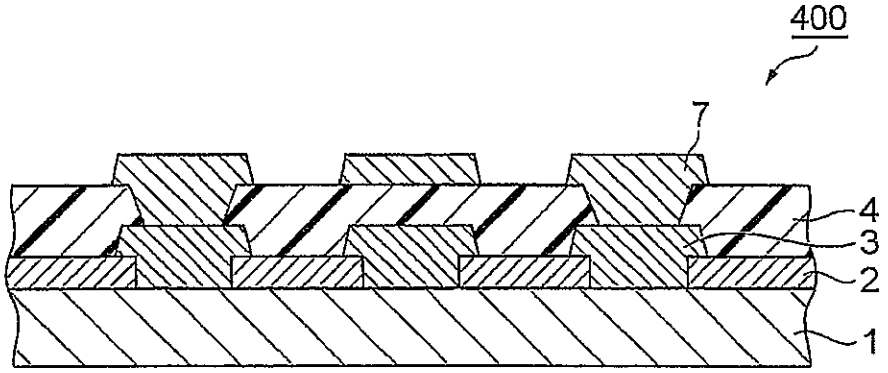

Fig.5

(a)

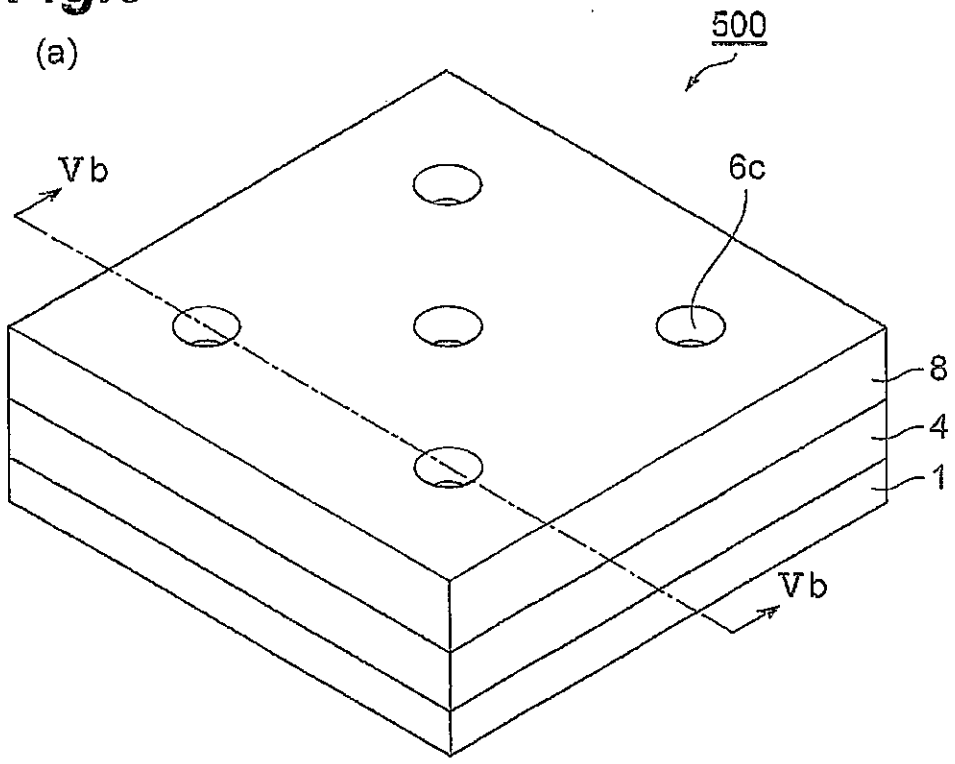

(b)

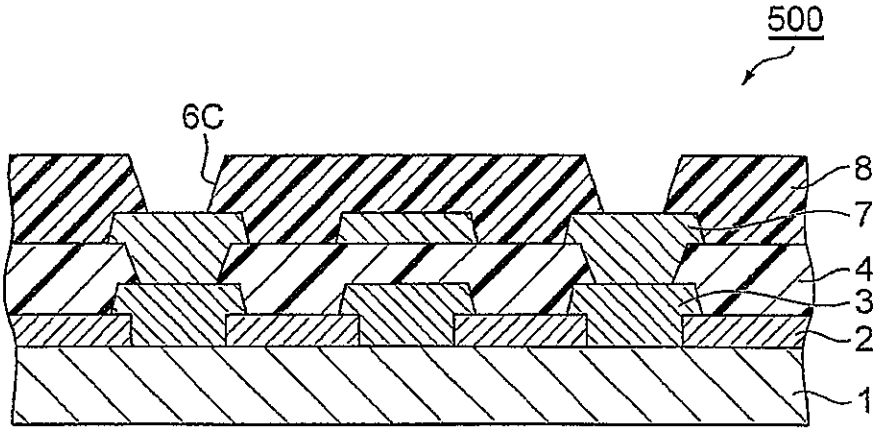

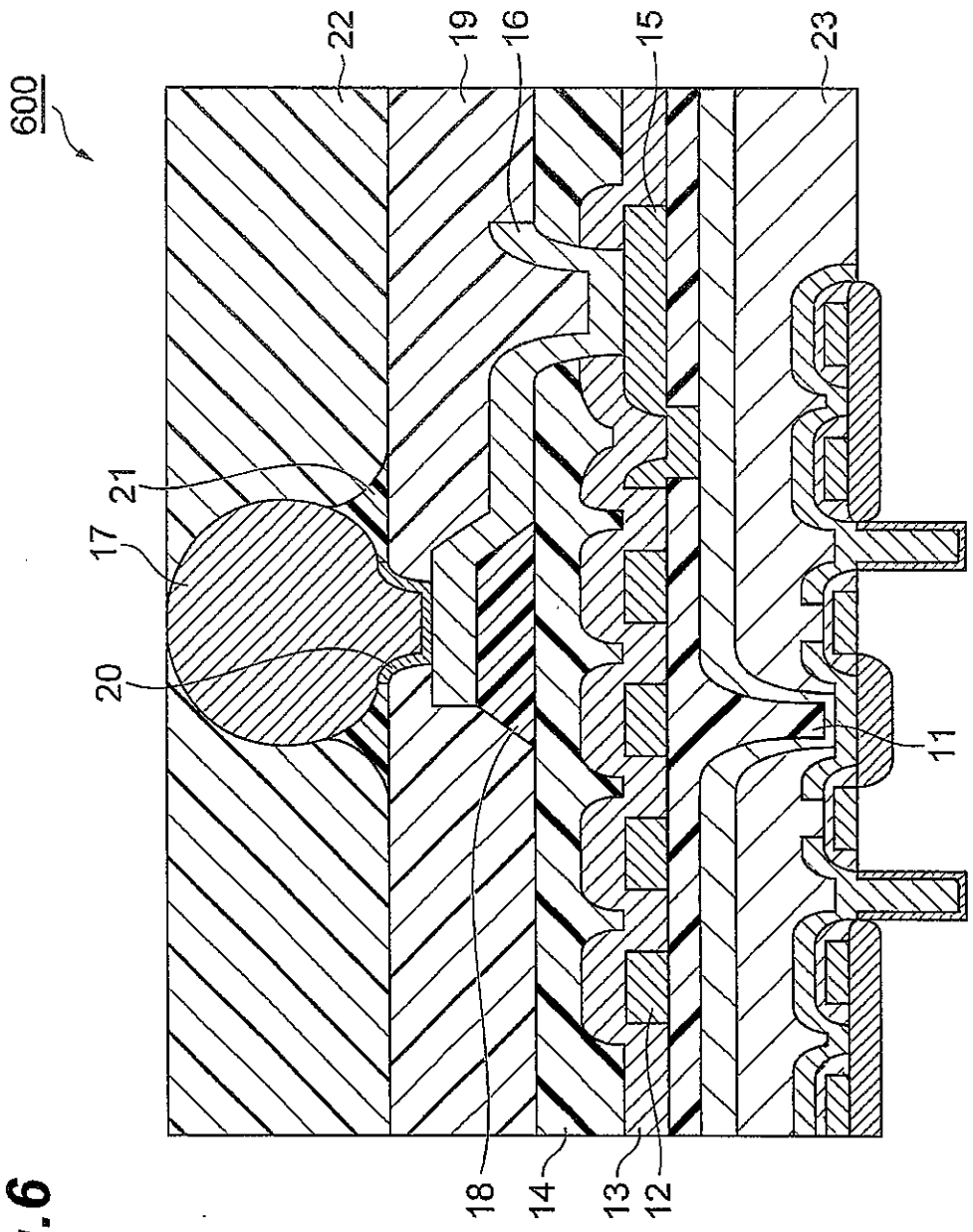

Fig.6

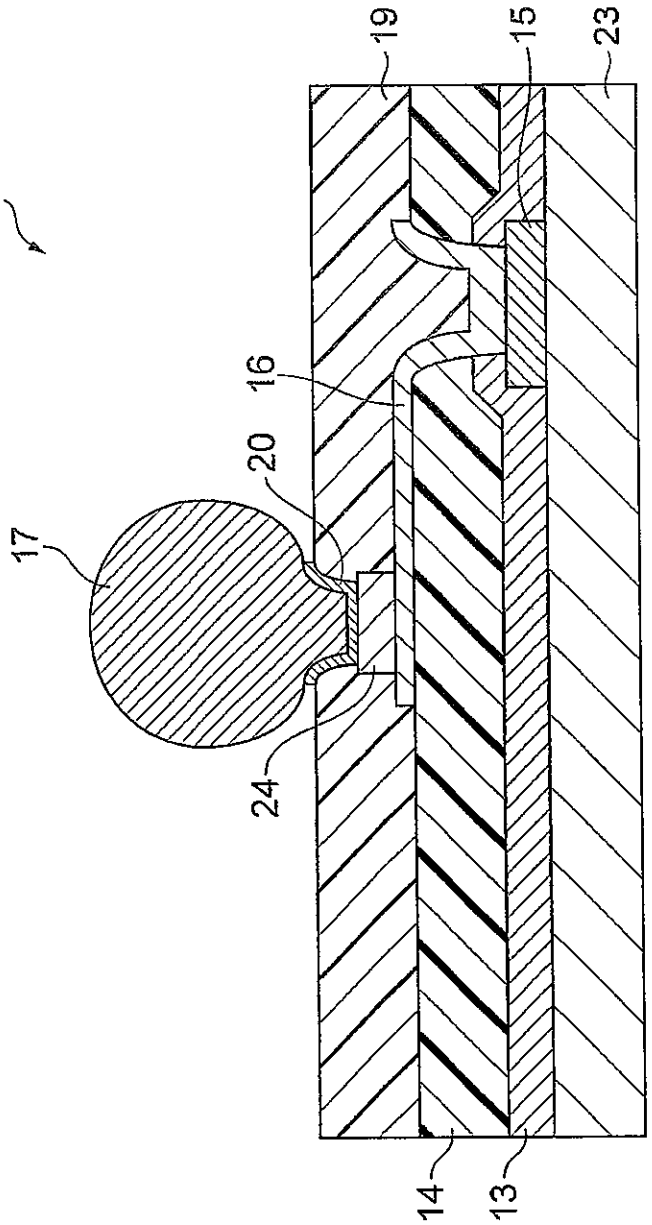

Fig.7