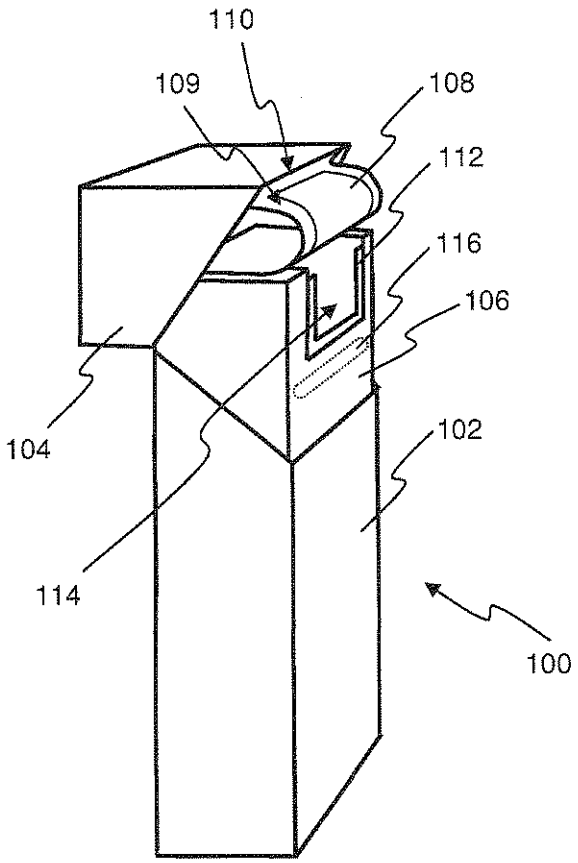

Figure 1

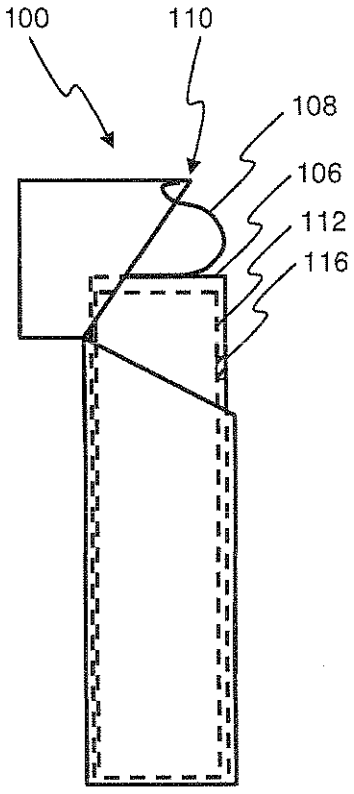

Figure 2

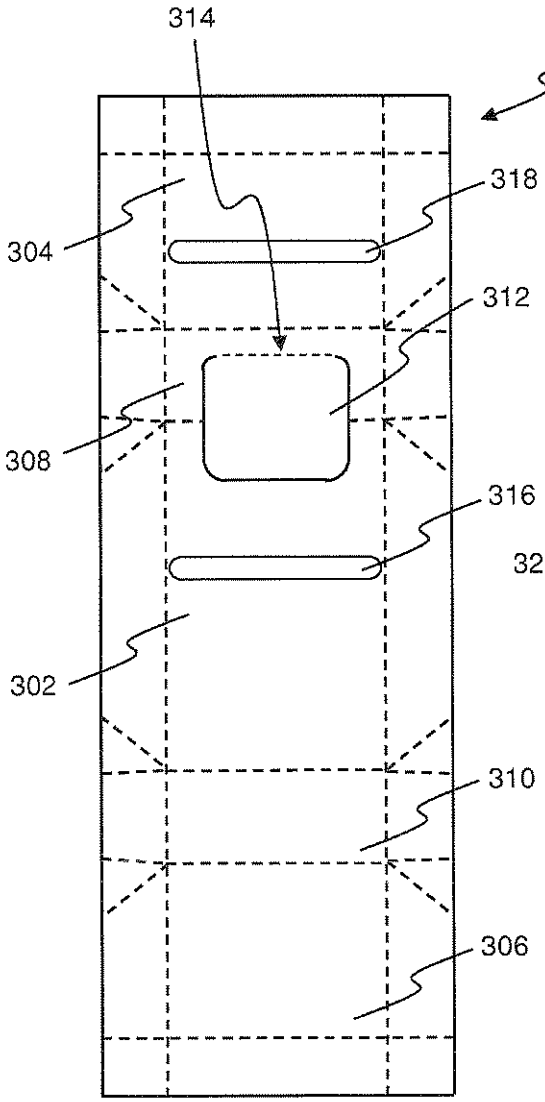

Figure 3(a)

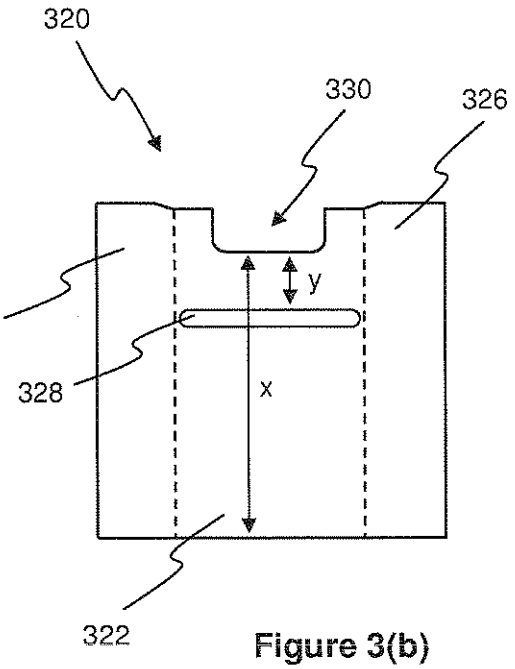

Figure 3(b)