FIG.1

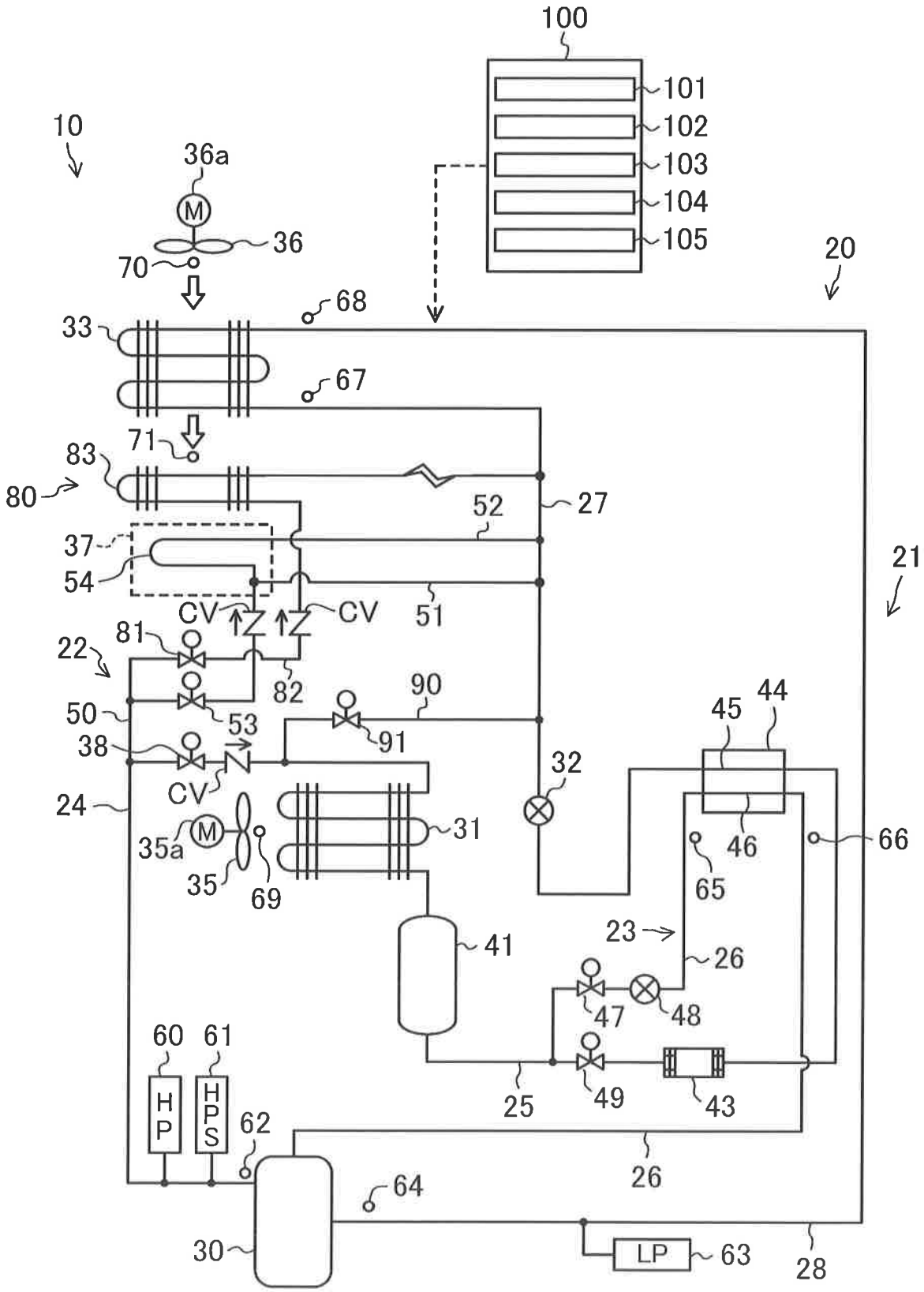
100
101
102
103
104
105
10
36a
M
36
70
20
68
33
67
71
83
80
27
52
37
54
51
21
CV
CV
81
22
82
90
50
53
91
45
44
38
32
CV
24
31
46
66
35a
M
35
69
65
23
41
26
47
48
60
61
HP
HPS
49
43
25
62
26
64
30
LP
63
28

FIG.2

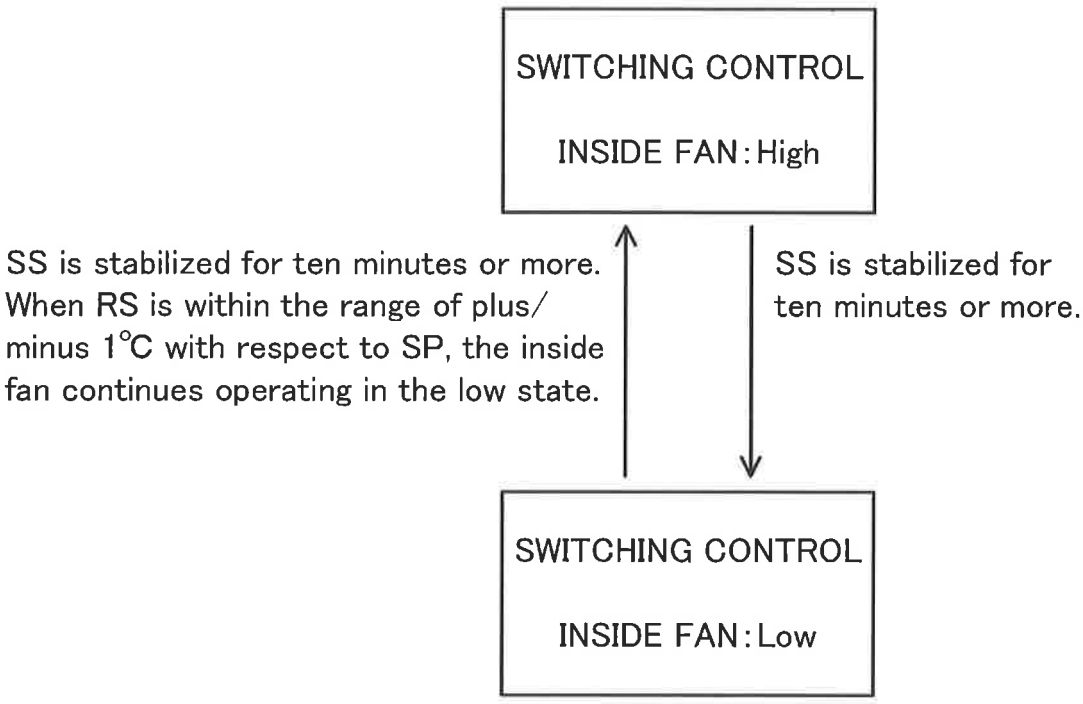
SWITCHING CONTROL
INSIDE FAN : High
SS is stabilized for ten minutes or more. When RS is within the range of plus/ minus 1°C with respect to SP, the inside fan continues operating in the low state.
SS is stabilized for ten minutes or more.
SWITCHING CONTROL
INSIDE FAN : Low

FIG.3

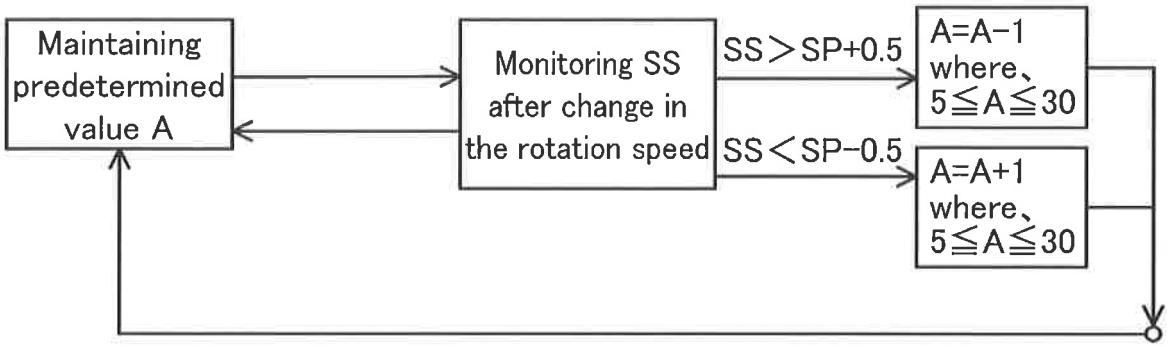
Maintaining predetermined value A
Monitoring SS after change in the rotation speed
SS＞SP+0.5
SS＜SP−0.5
A=A−1 where、5≦A≦30
A=A+1 where、5≦A≦30

FIG.4

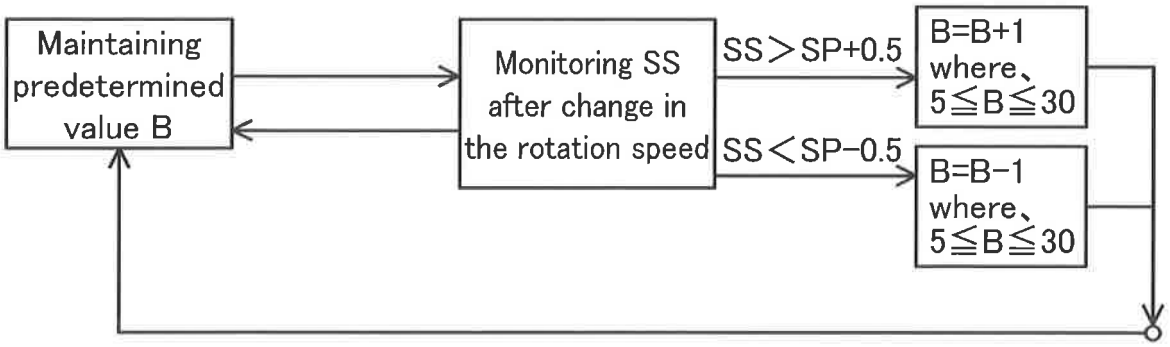
Maintaining predetermined value B
Monitoring SS after change in the rotation speed
SS＞SP+0.5
SS＜SP−0.5
B=B+1 where、5≦B≦30
B=B−1 where、5≦B≦30

FIG.5

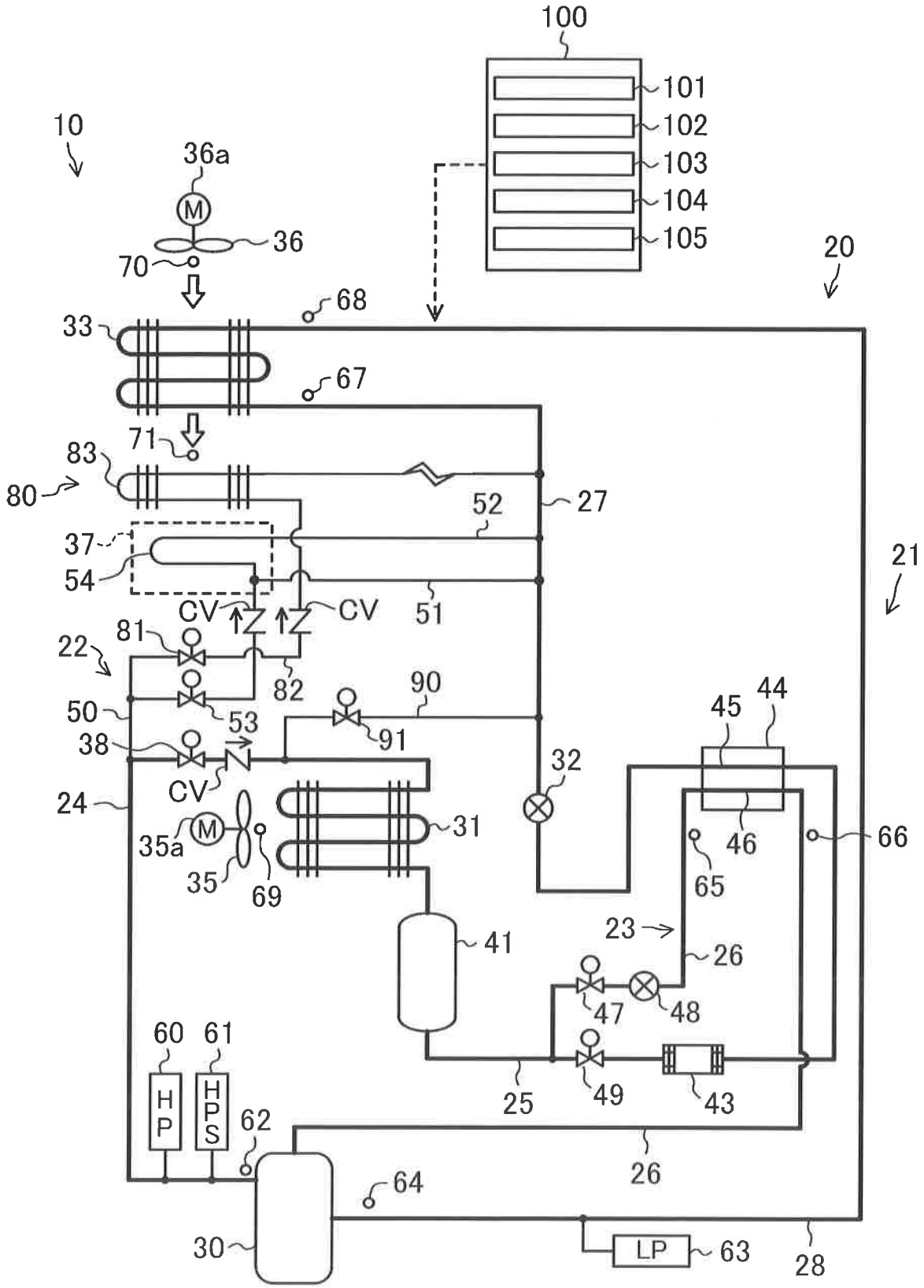
100
101
102
103
104
105
10
36a
M
36
70
20
68
33
67
71
83
80
52
27
37
54
51
21
CV
CV
81
22
82
90
50
53
91
38
32
45
44
CV
24
35a
M
31
46
66
35
69
65
23
41
26
47
48
60
61
HP
HPS
62
49
43
25
26
64
30
LP
63
28

FIG.6

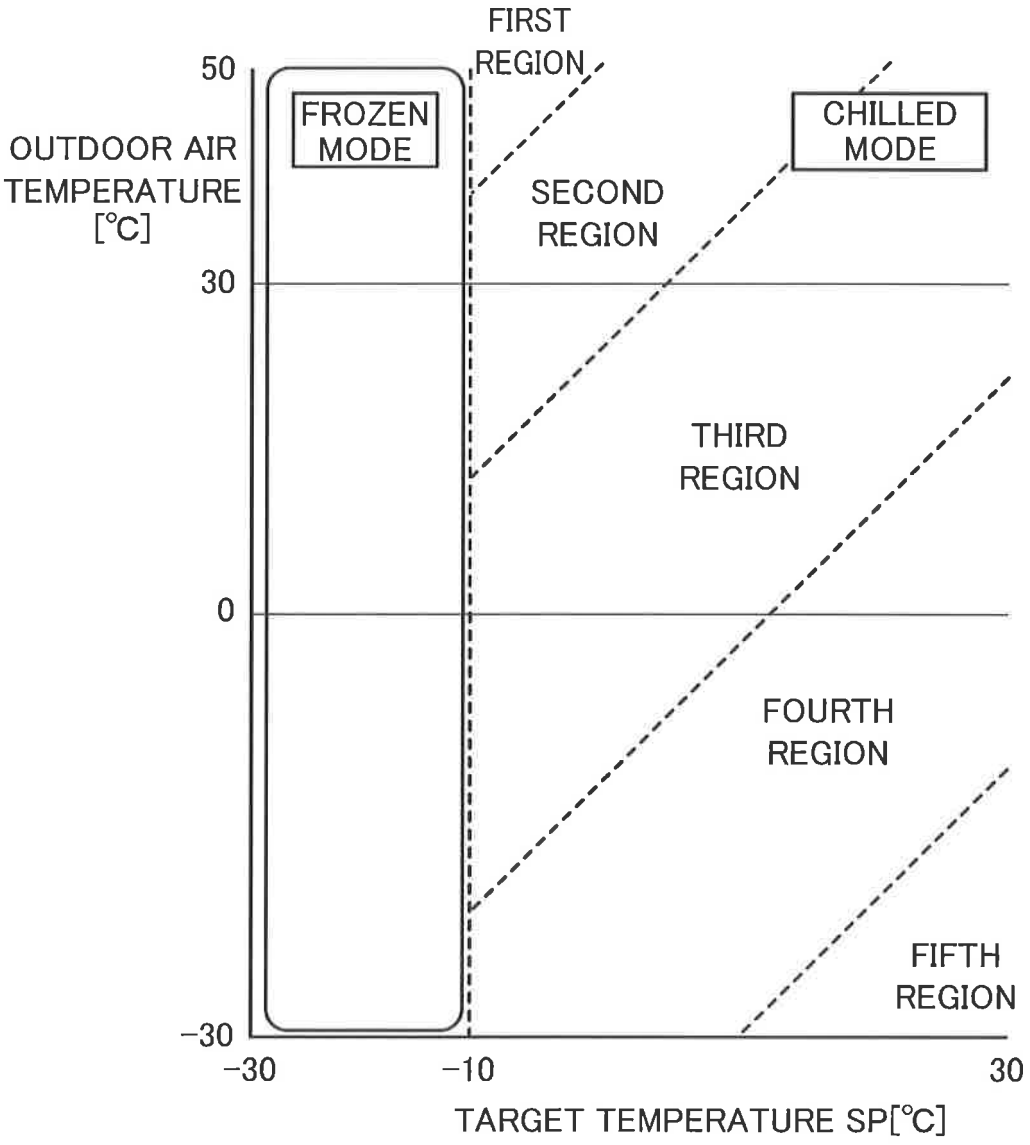
FIRST
REGION
50
FROZEN
MODE
CHILLED
MODE
OUTDOOR AIR
TEMPERATURE
[°C]
SECOND
REGION
30
THIRD
REGION
0
FOURTH
REGION
FIFTH
REGION
-30
-30
-10
30
TARGET TEMPERATURE SP[°C]