Drive unit for a lift

Description

Drive unit with motor and gear for a lift, in particular for the own drive of a cage, which runs at guides, for the transport of persons or goods, wherein the drive unit is connected with the cage or with the cage-supporting structure.

GB 956 332 discloses a drive equipment of the described kind. In Figs. 9 to 13, different drive dispositions are shown. A common feature of all illustrations is a motor with one or two shaft ends, on which a worm is present. The worm or worms stand in operative connection with worm wheels which are flanged together with drive wheels. In a rucksack arrangement of the cage, the drive is disposed below the cage and, according to Figs. 9 and 10, drives an axle with two drive wheels from a shaft end with a worm. In a second drive disposition, the drive is arranged on a cage with a motor with two shaft ends, the worms of which according to Figs. 12 and 13 drive a respective axle with two drive wheels by way of worm wheels. In a third kind according to Fig. 11, the motor is in vertical position underneath the cage and by way of a belt gear drives an axle with two worms which in their turn drive two oppositely running drive wheels displaced one relative to the other.

The drive elements of motor, gear, axles and drive wheels are arranged separately in all these solutions and must be assembled and coupled together during the installation. In that case, several axle bearings, couplings, supports and separately encapsulated gears are to be mounted and aligned one to the other. Such an installation in situ is time-consuming and, according to experience, accompanied by technical problems. The drives moreover do not comprise the brake prescribed for lift drives. Worm gears moreover do not have an optimum efficiency, which in effect signifies more power, more weight and more costs.

It is therefore the object of the present invention to create a drive unit for a lift, which does not have the mentioned disadvantages and in particular has a low weight. The drive unit is simple to manufacture at favourable costs and can be preassembled as complete unit without requiring special installation operations.

This problem is solved by the invention characterised In claim 1 and illustrated in the drawings and the description.

The invention distinguishes itself inter alia by all elements of the drive being arranged concentrated in a common housing and requiring only a minimum expenditure for the housing and force-transmitting elements. This leads to, apart from high operational reliability, an appreciable reduction in weight, in particular the combination of motor housing and axle tube.

Advantageous developments and improvements are recited in the subclaims.

A high-power hob gear optimises the overall efficiency of the drive unit, whilst its space-saving arrangement on the drive axle results in a small overall volume. Moreover, two drive wheels are driven by way of a single gear.

A multifunctional housing surrounds the motor with brake and gear and moreover still carries the axle bearings for the drive wheels by tubular prolongations forming the axle tube at both sides.

A special construction of the motor rotor permits its co-axial arrangement on the drive wheel shaft.

An electromagnetic disc brake at the motor or a respective shoe brake at the drive wheels or a combination of both brakes can be provided as brake.

The relationship of the diameters of the drive wheel and the drive housing is so chosen that the installation and disassembly of the drive unit are facilitated thereby.

The invention is explained more closely in the following with the aid of an example of embodiment and illustrated in the drawing, there showing:

Fig. 1 the arrangement of the drive unit at a lift,
Fig. 2 in section, a drive unit with a electromagnetic disc brake at the motor,
Fig. 3 in section, a drive unit with shoe brakes in the drive wheels and

Fig. 4 the drive unit with an auxiliary drive.

A cage, which is built into a cage-supporting structure 16, is denoted by 30 in Fig. 1. A freely running support wheel 28 is arranged with undisplaceable axle at the cage-supporting structure 16. A drive unit 1 is connected with the lower end of the cage-supporting structure 16 to be pivotable by way of a rocker 15 fastened at a stationary axle tube 11 and a drive wheel 10, which belongs to the drive unit 1, on a wheel shaft 8 is drawn to a guide 27 by way of a contact pressure equipment in the form of a spring 29, which is arranged at about a right angle to the rocker 15. The fastening point of the spring 29 at the cage-supporting structure 16 is situated somewhat above the support wheel 28. In the case of the drive unit 1, the spring 29 engages likewise at the axle tube 11. A motor housing, the diameter of which is smaller than that of the drive wheel 10, is denoted by 31.

The motor housing, which is closed off at both sides by a motor flange 12, is denoted by 31 in Fig. 2. The motor flanges 12 are each respectively continued co-axially with a system axis X externally to the left and the right as axle tubes 11, which each have a respective wheel shaft bearing 13 arranged at the outer end. A stator 2 of an electrical motor is pushed in at about the centre in the motor housing 31 and firmly connected with the housing 31. Rotor shaft bearings 14, in which a rotor shaft 4 is borne, are present at both sides of the stator 2. The rotor shaft 4 carries a rotor 3, wherein an inductive operative connection with the stator 2 is present by way of a rotor air gap 26. The rotor shaft 4 is constructed as hollow shaft and arranged co-axially above the wheel shaft 8. The rotor shaft 4 carries a toothed sunwheel 5 at the left-hand end and a brake disc 17 at the right-hand end. The sunwheel 5 engages into planetary wheels 6, which stand in engagement at the outside with an internal crown wheel 9 firmly connected with the housing 31. The centres of the planetary wheels 6 are retained in their angular positions by a planet wheel carrier 7, wherein the planet wheel carrier 7 as drive output element is firmly connected with the wheel shaft 8. Hereby, the wheel shaft 8 is driven by the motor by way of the sunwheel 5, the planetary wheels 6 and the planet wheel carrier 7 at a motor rotational speed reduced according to the transmission ratio of a planetary gear 33.

A brake 32 in the form of an electromagnetic spring pressure disc brake is arranged on the right-hand side of the motor. A brake plate 18 is urged against the brake disc 17 in the rest position by means of a spring 20. On electrical excitation of a circularly annular electromagnet 19 fastened at the inward side of the right-hand motor flange 12, the brake plate 18 is retracted magnetically and permits the motor shaft 4 to run freely. It is furthermore evident from this schematic illustration that the drive unit 1 is connected by way of two parallel rockers 15 with the cage-supporting structure 16. The wheel shaft 8 serves in common for both drive wheels 10 and is constructed homogeneously in one piece and passing through the entire drive unit 1.

In Fig. 3, shoe brakes 34 are provided at the drive wheels 10 in place of a spring pressure disc brake 32. The drive wheels 10 are provided with brake drums 21, in which brake shoes 23 are urged by means of springs 22 against the brake surface in the rest state. An actuator 25, which is fastened at the motor housing 31, on its actuation causes a clearing of the brake shoes 23 by way of a linkage 24. In the passive state of the actuator 25, the brake shoes 23 lie by spring pressure at and brake the drive wheels 10.

In Fig. 4, the drive unit is equipped with an attached auxiliary drive for an evacuation travel in the case of voltage failure. A starter motor 35 with a starter pinion 36 serves as auxiliary drive. In the case of voltage failure of an occupied and blocked cage between two storeys, a not illustrated evacuation control becomes active, which activates the starter motor 35 and the brake release magnet 19. The starter pinion 36 is pushed to the right after the switching-on of the auxiliary drive and engages into a gear wheel 37 milled in on the brake disc 17.

In the embodiment illustrated by way of example, a usual planetary gear 33 is deployed as speed-reducing element for the sake of simplicity. However, any other gear type can also be used when both the following conditions are fulfilled:

- The input and the output of the gear are arranged co-axially and
- The centre has a passage for the wheel shaft 8 or can be provided with a passage.

Kinds of gear, which can fulfill these conditions, possibly with adaptations, are, for example, "harmonic drive" gears or "CYCLO" gears.

Preferably, a frequency-regulated multiphase induction motor is used as motor. In principle, however, practically any kind of electrical motor can be used. In principle, the use of a hydraulic or pneumatic motor is also possible.

The co-axial arrangement of the motor 2, 3 and 26, the gear 33, the axle tube 11 and the wheel shaft 8 contribute in particular to a saving of weight, wherein a brake 32 present in the motor housing 31 is automatically likewise arranged co-axially with the wheel shaft 8. Through this arrangement, the drive unit 1 becomes compact and easily meets a modular mode of construction followed appropriately. The motor housing 31 with the firmly connected motor flanges 12 and the axial tubes 11 likewise firmly connected with these together form a rigid supporting structure for the entire drive unit 1. The compact external dimensions of the motor housing 31 result in an external diameter which is smaller than that of the drive wheels 10. Thereby, by one-sided support of the motor housing 1 on the gear side or on the brake side against the cage-supporting structure 16, the corresponding side can in case of need be disassembled and serviced without problems when the cage 30 is likewise supported. The supporting against the cage-supporting structure 16 serves for the lifting-off or relief of the corresponding drive wheel 10 from the guide 27 and can take place, for example, with a usual car jack.

The rockers 15 connected with the drive unit 1 can be firmly connected either with the motor housing 31 or with the motor flanges 12 or with the axle tubes 11. The pivotally movable connection of the rocker 15 with the cage structure 16 preferably comprises a vibration-damping bearing sleeve.

The geometric arrangement of the rocker 15 and the spring 29 is not restricted to the shown example. The fastening and pivot points of the spring 29 and the rocker 15 can be displaced downwardly or upwardly within certain limits according to which source effects are desired.

Drive unit for a lift

* C L M S *

Patent Claims

1. Drive unit (1) with motor and gear (33) for a lift, in particular for the own drive of a cage (30), which runs at guides (27), for the transport of persons or goods, wherein the drive unit (1) is connected with the cage (30) or with the cage-supporting structure (16), characterised in that the drive unit 91) comprises an axle tube (11), which is connected with the cage (30) and in which a wheel shaft (8) is mounted to be rotatable (13), that a motor (3, 26, 2) is arranged co-axially with the wheel shaft (8) and that the wheel shaft (8) passes through the motor (3, 26, 2).

2. Drive unit according to claim 1, characterised in that a speed-reducing gear (33) is arranged co-axially with the wheel shaft (8).

3. Drive unit according to claim 1, characterised in that the drive unit (1) comprises a respective drive wheel at each of the two axle ends and that both the drive wheels (10) are driven by only one gear (33) and the wheel shaft (8) passing through.

4. Drive unit according to claim 1, characterised in that the drive unit (1) is connected with the cage-supporting structure (16) of the cage (30), to be pivotably movable, by way of at least one rocker (15) and at least one contact pressure device (29).

5. Drive unit according to claim 4, characterised in that the motor housing (31) and the axle tube (11) are assembled into a supporting structure for the drive unit (1).

6. Drive unit according to claim 1, characterised in that the drive unit (1) comprises an auxiliary drive (35, 36, 37).

7. Drive unit according to one of the preceding claims, characterised in that the motor (3, 26, 2) comprises a brake (32), which is arranged co-axially with the wheel shaft (8).

This Sheet Has Been Replaced

8. Drive unit according to one of the preceding claims, characterised in that the drive wheel (10) comprises a brake, in particular a shoe brake (34), which is releasable by an actuator (25).

9. Drive unit according to one of the preceding claims, characterised in that the motor (3, 26, 2) is constructed as an induction motor which is drivable at variable frequency.

10. Drive unit according to one of the preceding claims, characterised in that the drive wheel (10) and a support wheel (28) lying opposite are urged against a guide rail (27) by the spring (29) with a force which produces frictional locking.

* C L M S *

This Sheet Has Been Replaced

Drive unit for a lift

Summary

A drive unit (1) for a lift, in particular for the own drive of a cage (30), which runs at guides (27), for the transport of persons or goods, wherein the drive unit (1) is connected with the cage (30) or with the cage-supporting structure (16) to be pivotable by way of a rocker and is urged by a contact pressure equipment (29) against the guide (27). The parts of the drive unit (1) with motor, brake and gear are arranged co-axially around a wheel shaft (8), which carries a respective drive wheel (10) at each of the two free shaft ends. The motor housing (31) and the axle tubes and motor flanges firmly connected with the motor housing (31) on their own form the supporting structure of the drive unit (1).

(Fig. 1)

This Sheet Has Been Replaced

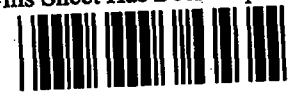

THIS SHEET HAS BEEN REPLACED

Drive unit for a lift

List of parts

1 Drive unit
2 Stator
3 Rotor
4 Rotor shaft
5 Sunwheel
6 Planetary wheel
7 Planet wheel carrier
8 Wheel shaft
9 Internal gear wheel
10 Drive wheel
11 Axial tube
12 Motor flange
13 Wheel shaft bearing
14 Rotor shaft bearing
15 Rocker
16 Cage-supporting structure
17 Brake disc
18 Brake plate
19 Brake-clearing magnet
20 Brake spring
21 Brake drum
22 Brake spring
23 Brake shoe
24 Brake linkage
25 Actuator
26 Motor air gap
27 Guide
28 Supporting wheel
29 Spring
30 Cage
31 Motor housing
32 Brake
33 Planetary gear
34 Shoe brake
X System axis
35 Starter motor
36 Starter pinion
37 Gear crown

This Sheet Has Been Replaced

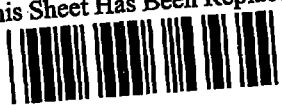

THIS SHEET HAS BEEN REPLACED

Fig. 1

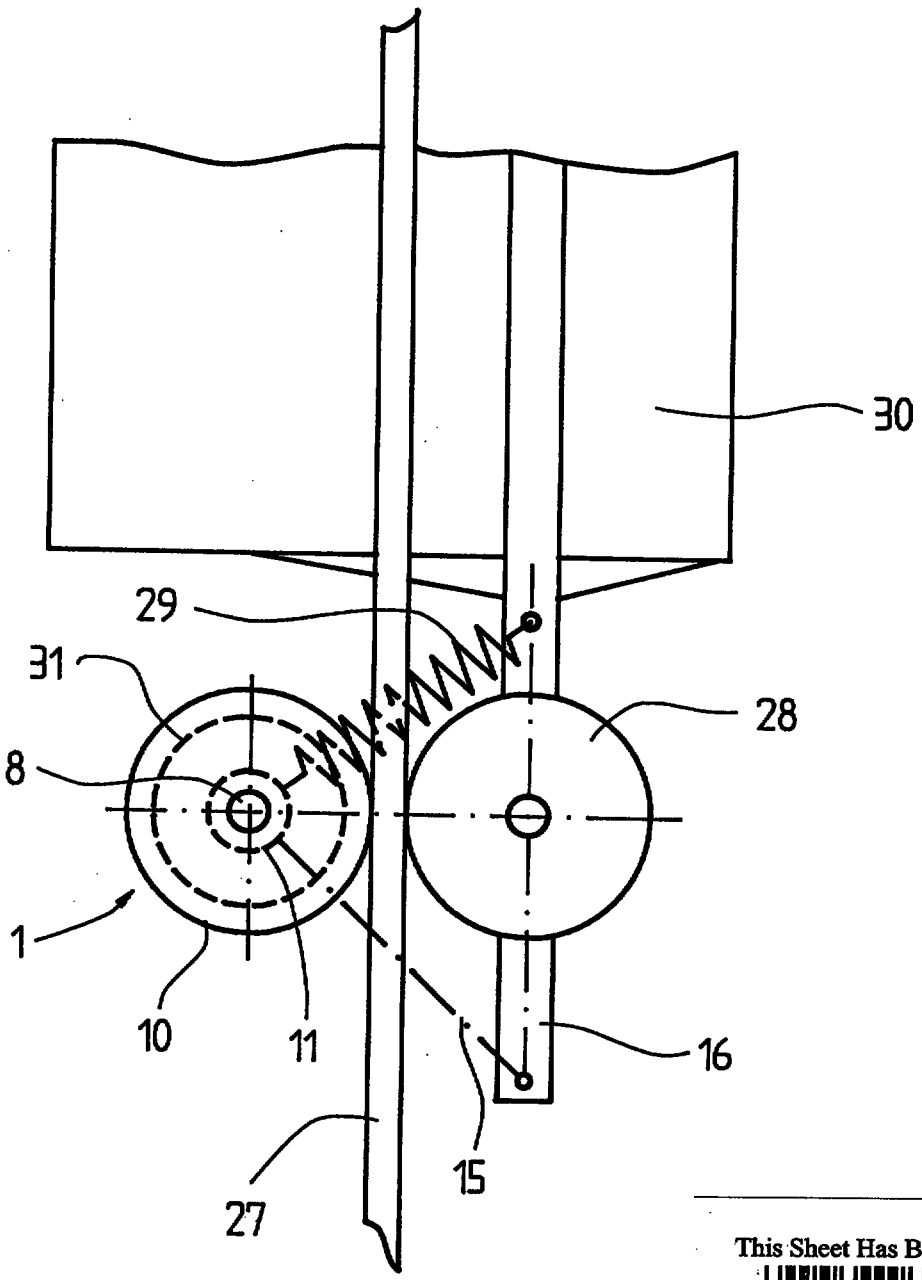

This Sheet Has Been Replaced

THIS SHEET HAS BEEN REPLACED

This Sheet Has Been Replaced

Fig. 2

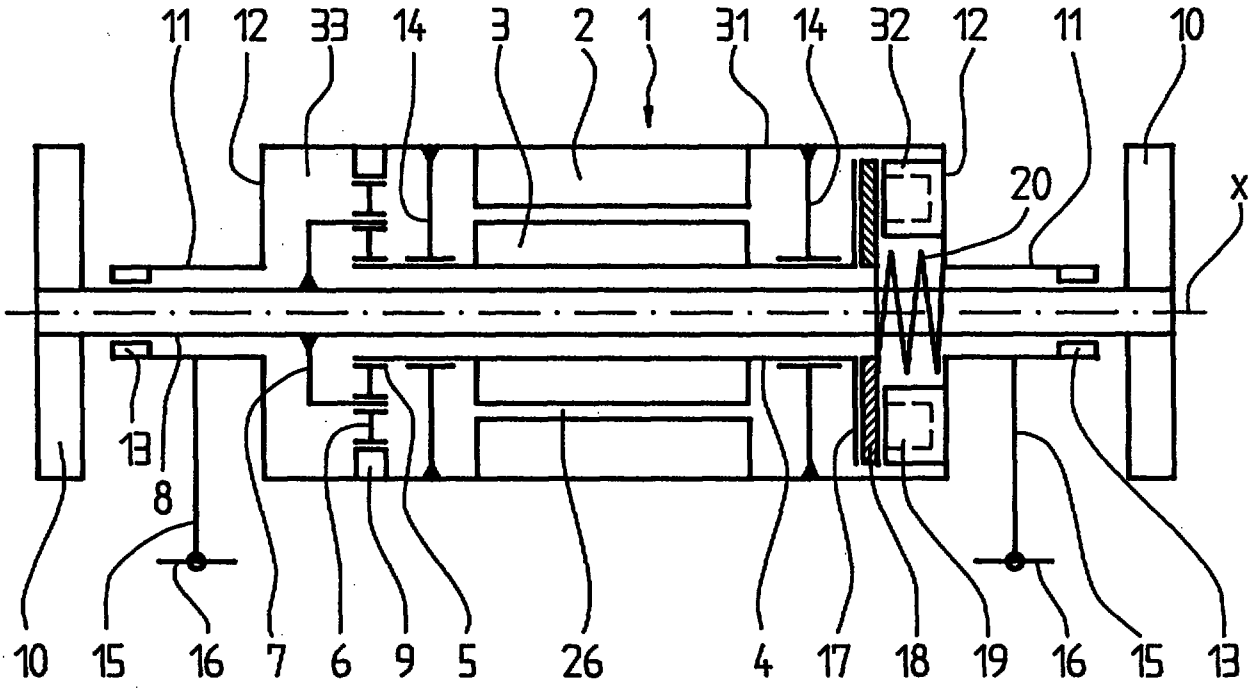

Fig. 3

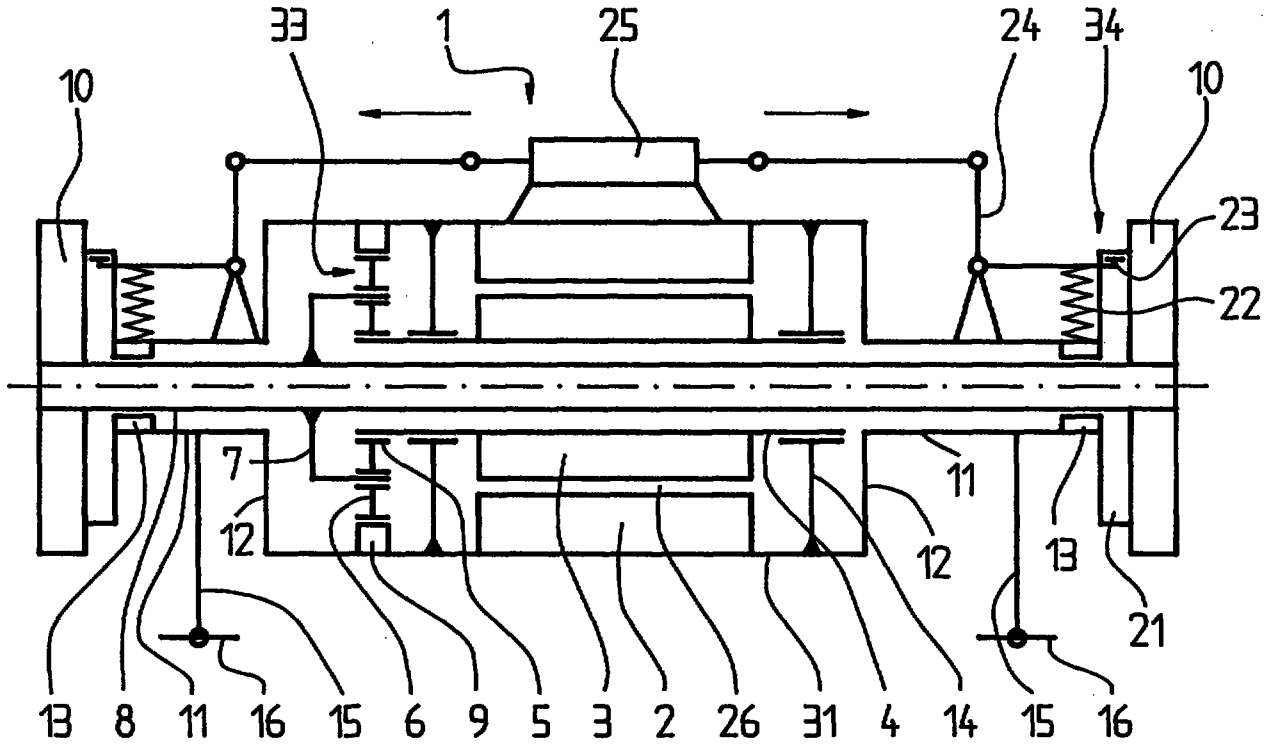

THIS SHEET HAS BEEN REPLACED

Fig. 4

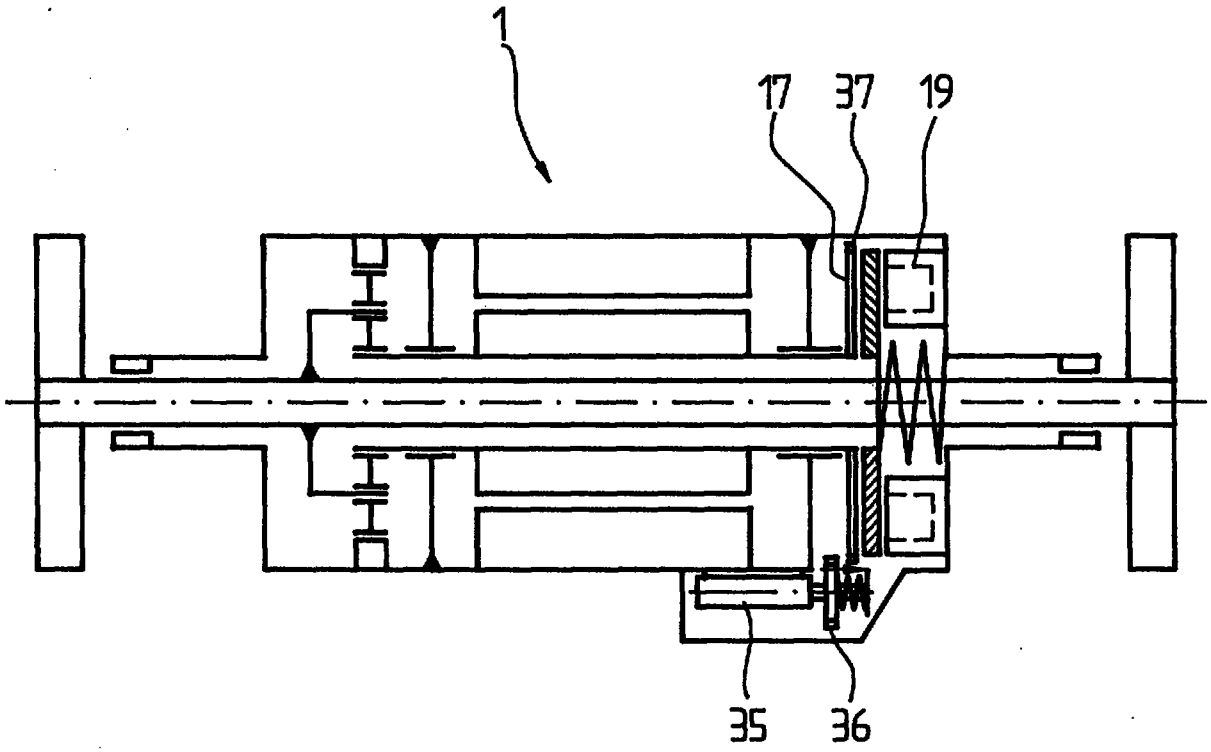

This Sheet Has Been Replaced



THIS SHEET HAS BEEN REPLACED

Ipos copy
9609941-1
6

REPLACEMENT SHEET
09 DEC 1996

Drive unit for a lift

List of parts

1 Drive unit
2 Stator
3 Rotor
4 Rotor shaft
5 Sunwheel
6 Planetary wheel
7 Planet wheel carrier
8 Wheel shaft
9 Internal gear wheel
10 Drive wheel
11 Axial tube
12 Motor flange
13 Wheel shaft bearing
14 Rotor shaft bearing
15 Rocker
16 Cage-supporting structure
17 Brake disc
18 Brake plate
19 Brake-clearing magnet
20 Brake spring
21 Brake drum
22 Brake spring
23 Brake shoe
24 Brake linkage
25 Actuator
26 Motor air gap
27 Guide
28 Supporting wheel
29 Spring
30 Cage
31 Motor housing
32 Brake
33 Planetary gear
34 Shoe brake
X System axis
35 Starter motor
36 Starter pinion
37 Gear crown

REPLACEMENT SHEET
09 DEC 1996

Drive unit for a lift

Patent Claims

1. Drive unit (1) with motor and gear (33) for a lift, in particular for the own drive of a cage (30), which runs at guides (27), for the transport of persons or goods, wherein the drive unit (1) is connected with the cage (30) or with the cage-supporting structure (16), characterised in that the drive unit 91) comprises an axle tube (11), which is connected with the cage (30) and in which a wheel shaft (8) is mounted to be rotatable (13), that a motor (3, 26, 2) is arranged co-axially with the wheel shaft (8) and that the wheel shaft (8) passes through the motor (3, 26, 2).

2. Drive unit according to claim 1, characterised in that a speed-reducing gear (33) is arranged co-axially with the wheel shaft (8).

3. Drive unit according to claim 1, characterised in that the drive unit (1) comprises a respective drive wheel at each of the two axle ends and that both the drive wheels (10) are driven by only one gear (33) and the wheel shaft (8) passing through.

4. Drive unit according to claim 1, characterised in that the drive unit (1) is connected with the cage-supporting structure (16) of the cage (30), to be pivotably movable, by way of at least one rocker (15) and at least one contact pressure device (29).

5. Drive unit according to claim 4, characterised in that the motor housing (31) and the axle tube (11) are assembled into a supporting structure for the drive unit (1).

6. Drive unit according to claim 1, characterised in that the drive unit (1) comprises an auxiliary drive (35, 36, 37).

7. Drive unit according to one of the preceding claims, characterised in that the motor (3, 26, 2) comprises a brake (32), which is arranged co-axially with the wheel shaft (8).

* C L M S *

REPLACEMENT SHEET
09 DEC 1996

8. Drive unit according to one of the preceding claims, characterised in that the drive wheel (10) comprises a brake, in particular a shoe brake (34), which is releasable by an actuator (25).

9. Drive unit according to one of the preceding claims, characterised in that the motor (3, 26, 2) is constructed as an induction motor which is drivable at variable frequency.

10. Drive unit according to one of the preceding claims, characterised in that the drive wheel (10) and a support wheel (28) lying opposite are urged against a guide rail (27) by the spring (29) with a force which produces frictional locking.

* C L M S *

REPLACEMENT SHEET
09 DEC 1996

Drive unit for a lift

Summary

A drive unit (1) for a lift, in particular for the own drive of a cage (30), which runs at guides (27), for the transport of persons or goods, wherein the drive unit (1) is connected with the cage (30) or with the cage-supporting structure (16) to be pivotable by way of a rocker and is urged by a contact pressure equipment (29) against the guide (27). The parts of the drive unit (1) with motor, brake and gear are arranged co-axially around a wheel shaft (8), which carries a respective drive wheel (10) at each of the two free shaft ends. The motor housing (31) and the axle tubes and motor flanges firmly connected with the motor housing (31) on their own form the supporting structure of the drive unit (1).

(Fig. 1)

REPLACEMENT SHEET
09 DEC 1996

Fig. 1

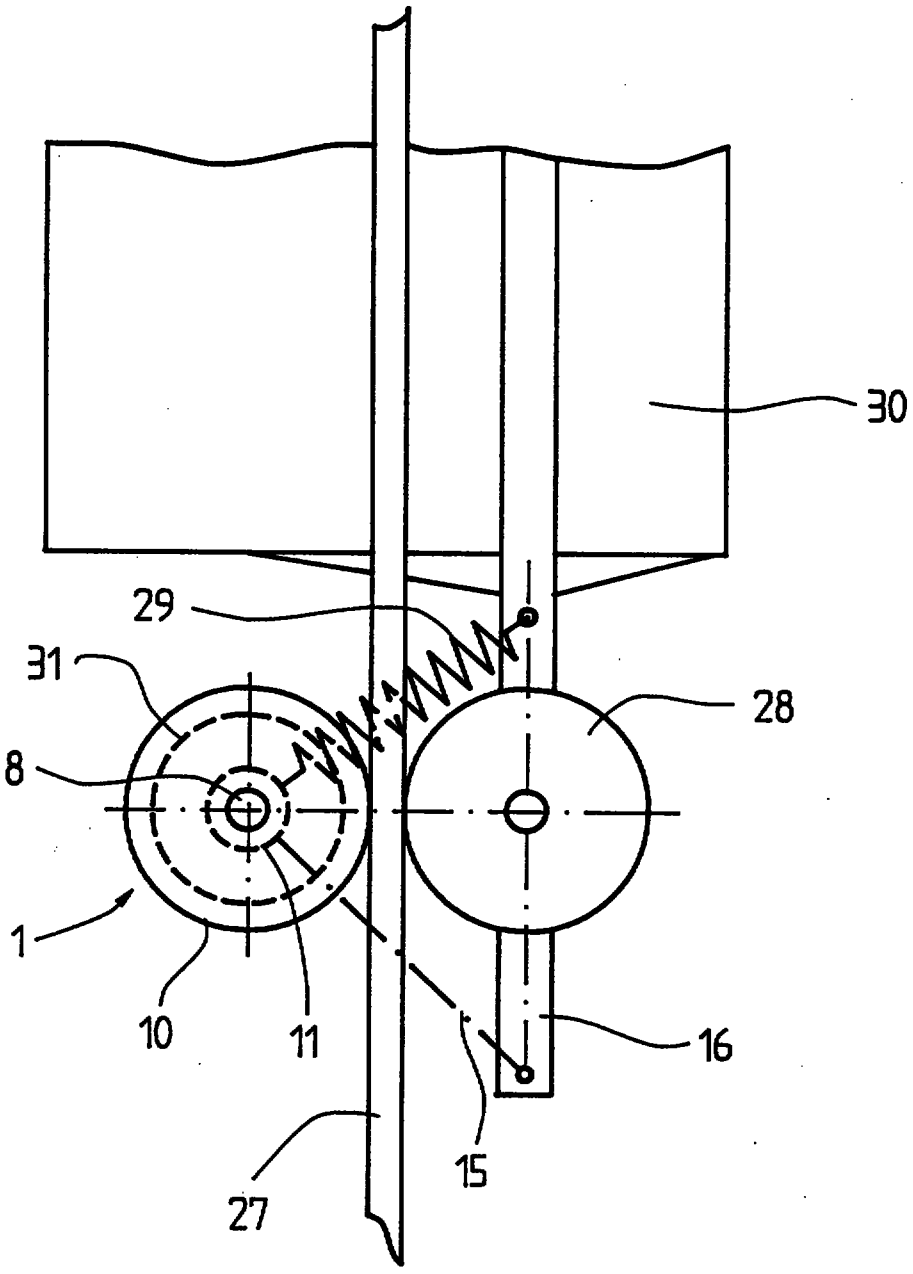

REPLACEMENT SHEET
09 DEC 1996

Fig. 2

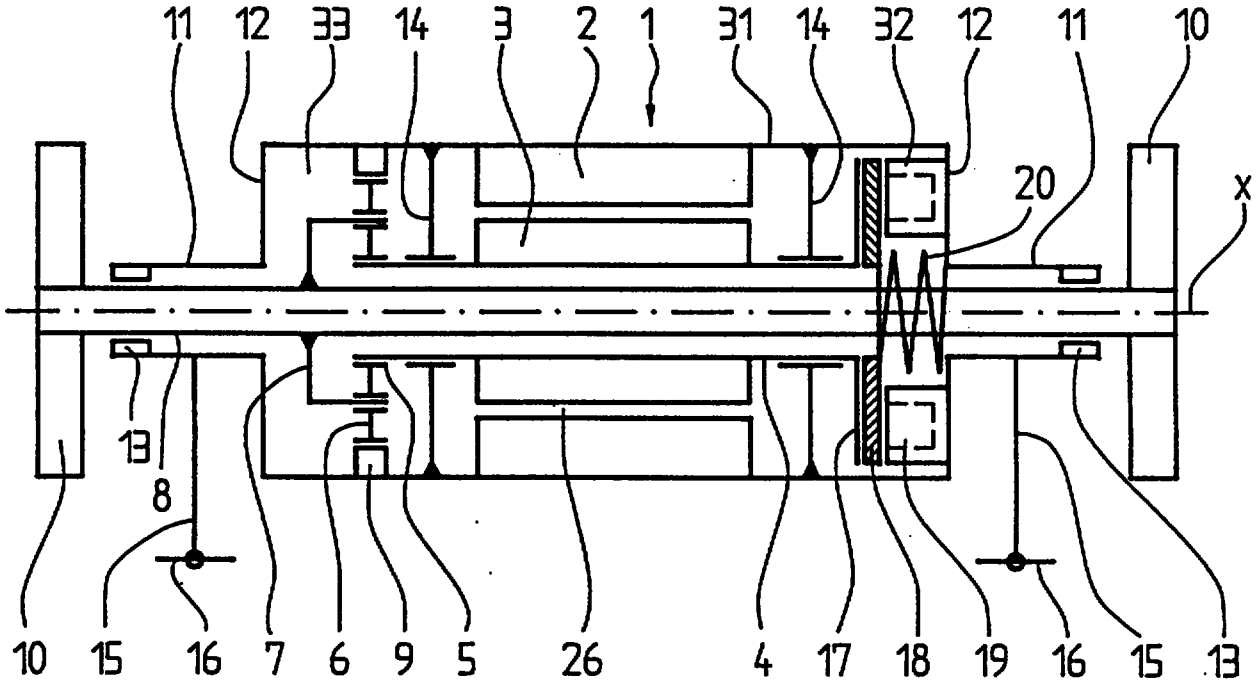

Fig. 3

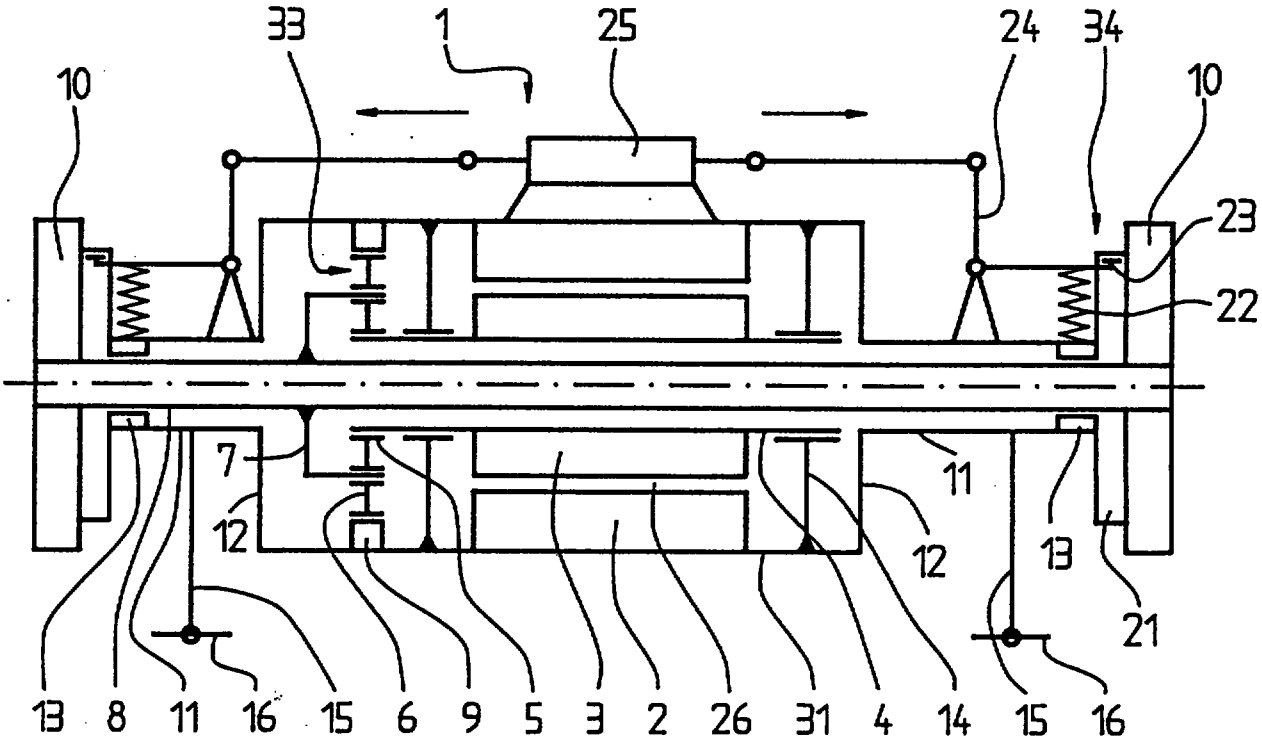

Fig. 4

