(12) INTERNATIONAL APPLICATION PUBLISHED UNDER THE PATENT COOPERATION TREATY (PCT)

(19) World Intellectual Property Organization
International Bureau

(43) International Publication Date
04 September 2025 (04.09.2025)

WIPO | PCT

(10) International Publication Number
WO 2025/181468 A1

(51) International Patent Classification:
G02C 7/02 (2006.01) *G02C 7/04* (2006.01)
B29D 11/00 (2006.01)

(21) International Application Number:
PCT/GB2025/050370

(22) International Filing Date:
26 February 2025 (26.02.2025)

(25) Filing Language: English

(26) Publication Language: English

(30) Priority Data:
63/559,221 29 February 2024 (29.02.2024) US

(71) Applicant: **COOPERVISION INTERNATIONAL LIMITED** [GB/GB]; Delta Park, Concorde Way, Segensworth North, Fareham PO15 5RL (GB).

(72) Inventors: **KASTHURIRANGAN, Sanjeev**; CooperVision, Inc., 5870 Stoneridge Drive, Suite 1, Pleasanton, California 94588 (US). **HALL, Lee Anthony**; CooperVision, Inc., 5870 Stoneridge Drive, Suite 1, Pleasanton, California 94588 (US). **CHISHOLM, Robert**; CooperVision International Limited, 36 School Lane, Chandlers Ford Industrial Estate, Eastleigh Hampshire SO53 4LY (GB). **MILLER, Gary Colin**; CooperVision International Limited, 36 School Lane, Chandlers Ford Industrial Estate, Eastleigh Hampshire SO53 4LY (GB).

(74) Agent: **ABEL & IMRAY LLP**; Westpoint Building, James Street West, Bath Bath and North East Somerset BA1 2DA (GB).

(81) Designated States *(unless otherwise indicated, for every kind of national protection available)*: AE, AG, AL, AM, AO, AT, AU, AZ, BA, BB, BG, BH, BN, BR, BW, BY, BZ, CA, CH, CL, CN, CO, CR, CU, CV, CZ, DE, DJ, DK, DM, DO, DZ, EC, EE, EG, ES, FI, GB, GD, GE, GH, GM, GT, HN, HR, HU, ID, IL, IN, IQ, IR, IS, IT, JM, JO, JP, KE, KG, KH, KN, KP, KR, KW, KZ, LA, LC, LK, LR, LS, LU, LY, MA, MD, MG, MK, MN, MU, MW, MX, MY, MZ, NA, NG, NI, NO, NZ, OM, PA, PE, PG, PH, PL, PT, QA, RO, RS, RU, RW, SA, SC, SD, SE, SG, SK, SL, ST, SV, SY, TH, TJ, TM, TN, TR, TT, TZ, UA, UG, US, UY, UZ, VC, VN, WS, ZA, ZM, ZW.

(84) Designated States *(unless otherwise indicated, for every kind of regional protection available)*: ARIPO (BW, CV, GH, GM, KE, LR, LS, MW, MZ, NA, RW, SC, SD, SL, ST,

(54) Title: CONTACT LENSES WITH INVERSION MARKS

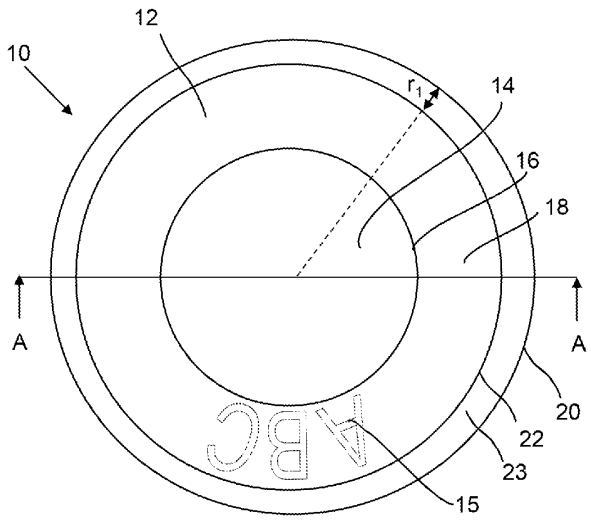

FIG. 1

(57) Abstract: A contact lens (10) comprising a lens body (12) is disclosed. The lens body (12) comprises an inversion mark (15) defined by a plurality of dimples (50) formed in a surface of the lens (body (12); said dimples defining a plurality of symbols. Each symbol of the inversion mark (15) has a symbol height and a symbol width, and for each symbol, the symbol height is greater than twice the symbol width of said symbol.

WO 2025/181468 A1

[Continued on next page]

SZ, TZ, UG, ZM, ZW), Eurasian (AM, AZ, BY, KG, KZ, RU, TJ, TM), European (AL, AT, BE, BG, CH, CY, CZ, DE, DK, EE, ES, FI, FR, GB, GR, HR, HU, IE, IS, IT, LT, LU, LV, MC, ME, MK, MT, NL, NO, PL, PT, RO, RS, SE, SI, SK, SM, TR), OAPI (BF, BJ, CF, CG, CI, CM, GA, GN, GQ, GW, KM, ML, MR, NE, SN, TD, TG).

Published:

— *with international search report (Art. 21(3))*