FIG.1

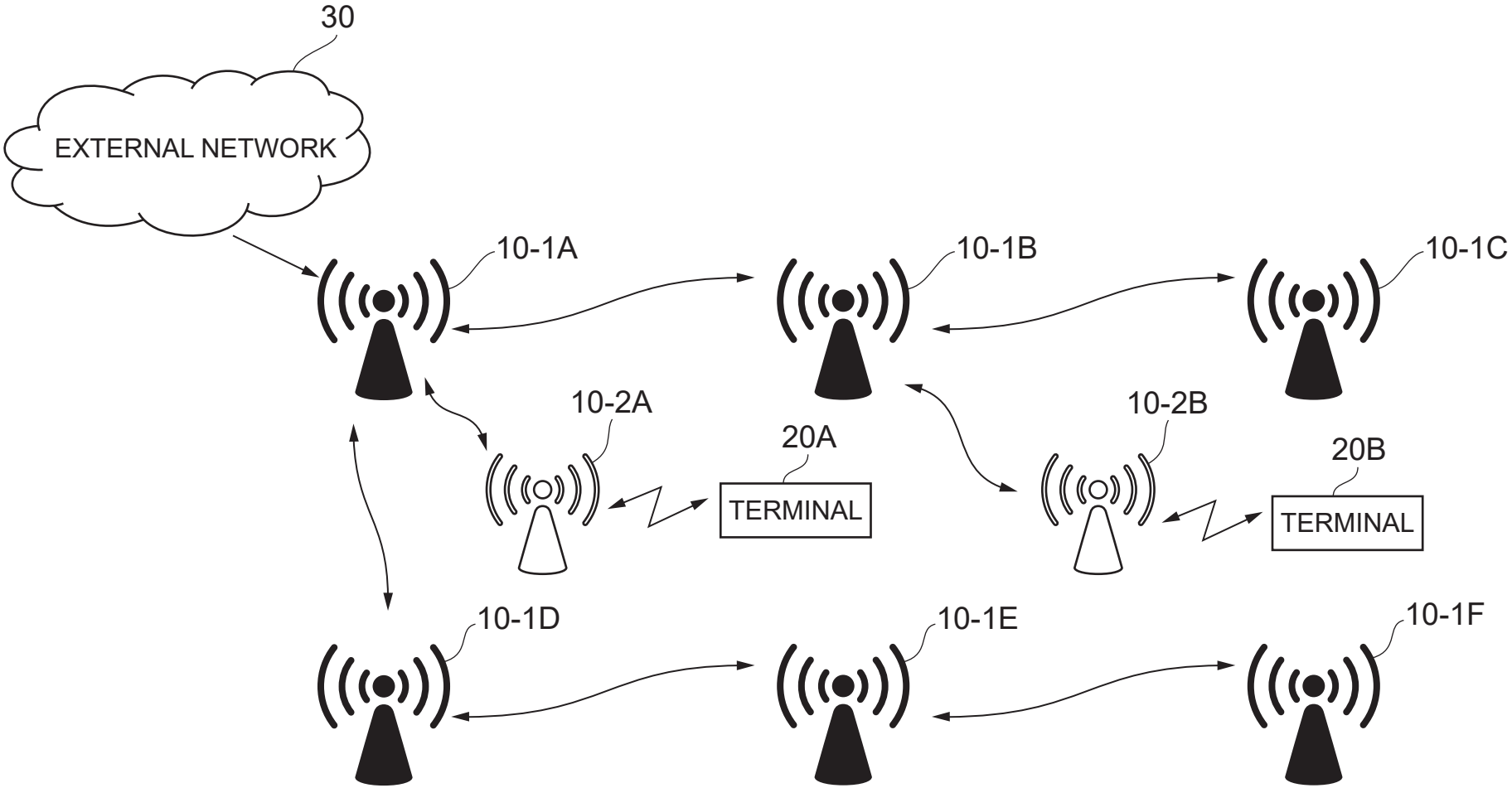
30
EXTERNAL NETWORK
10-1A
10-1B
10-1C
10-2A
20A
TERMINAL
10-2B
20B
TERMINAL
10-1D
10-1E
10-1F

FIG. 2

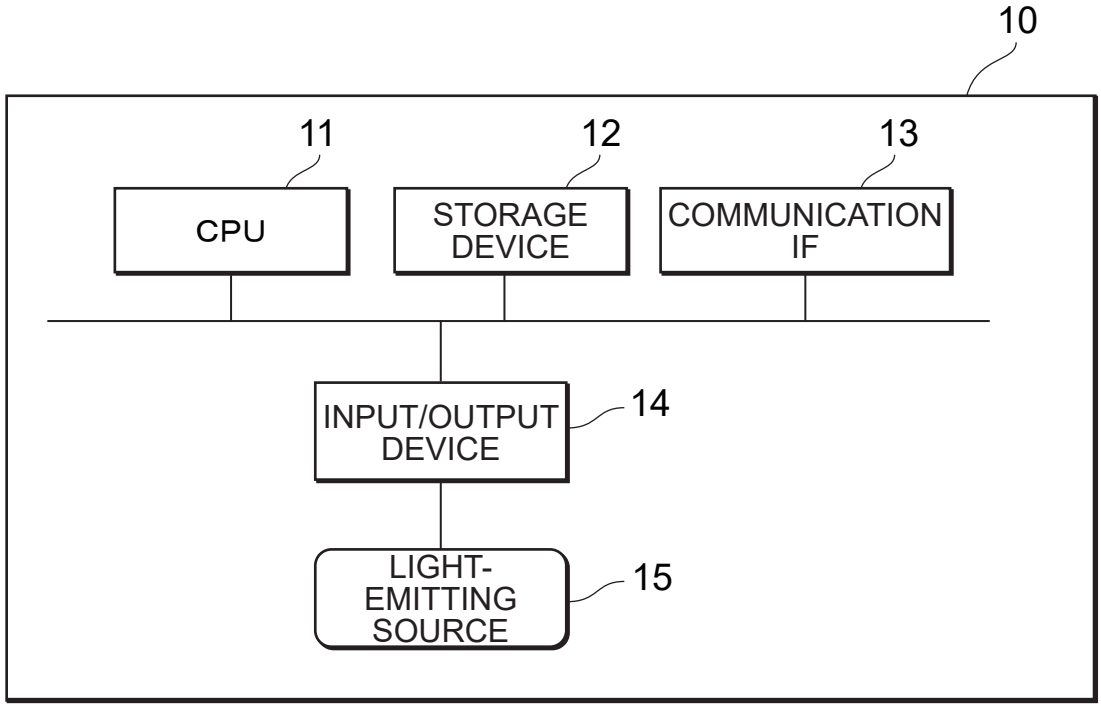
10
11
12
13
CPU
STORAGE DEVICE
COMMUNICATION IF
INPUT/OUTPUT DEVICE
14
LIGHT-EMITTING SOURCE
15

FIG.3

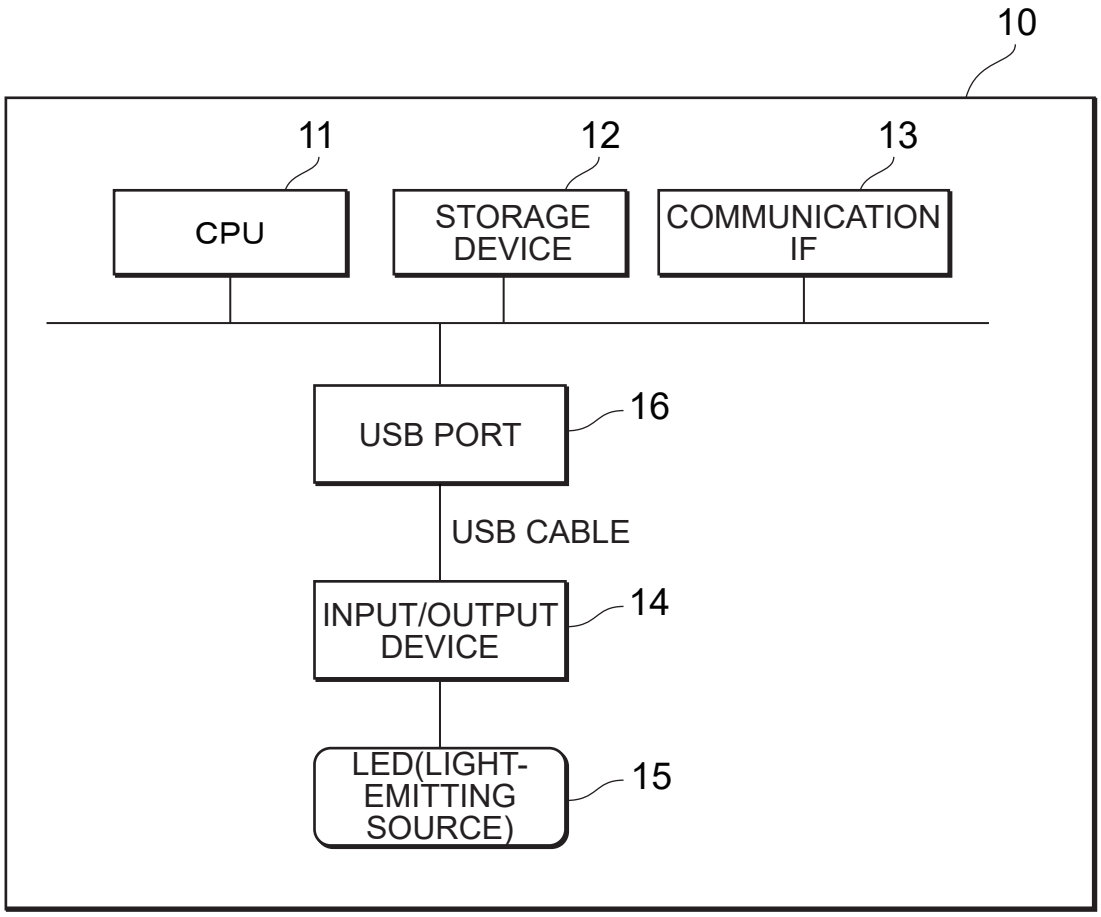
10
11
12
13
CPU
STORAGE DEVICE
COMMUNICATION IF
USB PORT
16
USB CABLE
INPUT/OUTPUT DEVICE
14
LED(LIGHT-EMITTING SOURCE)
15

FIG.4

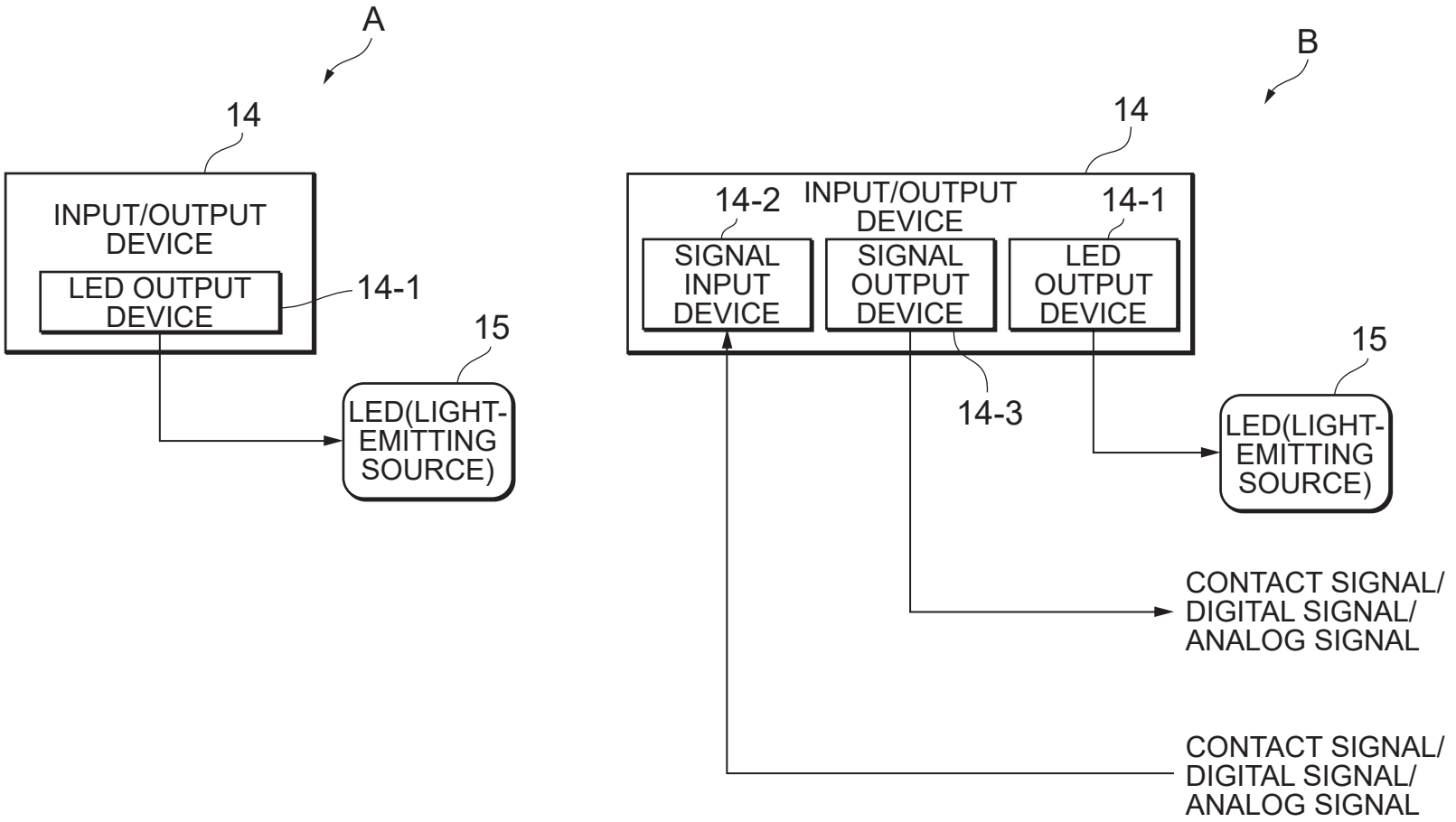
A
14
INPUT/OUTPUT DEVICE
LED OUTPUT DEVICE
14-1
15
LED(LIGHT-EMITTING SOURCE)
B
14
14-2
INPUT/OUTPUT DEVICE
14-1
SIGNAL INPUT DEVICE
SIGNAL OUTPUT DEVICE
LED OUTPUT DEVICE
14-3
15
LED(LIGHT-EMITTING SOURCE)
CONTACT SIGNAL/ DIGITAL SIGNAL/ ANALOG SIGNAL
CONTACT SIGNAL/ DIGITAL SIGNAL/ ANALOG SIGNAL

FIG. 5

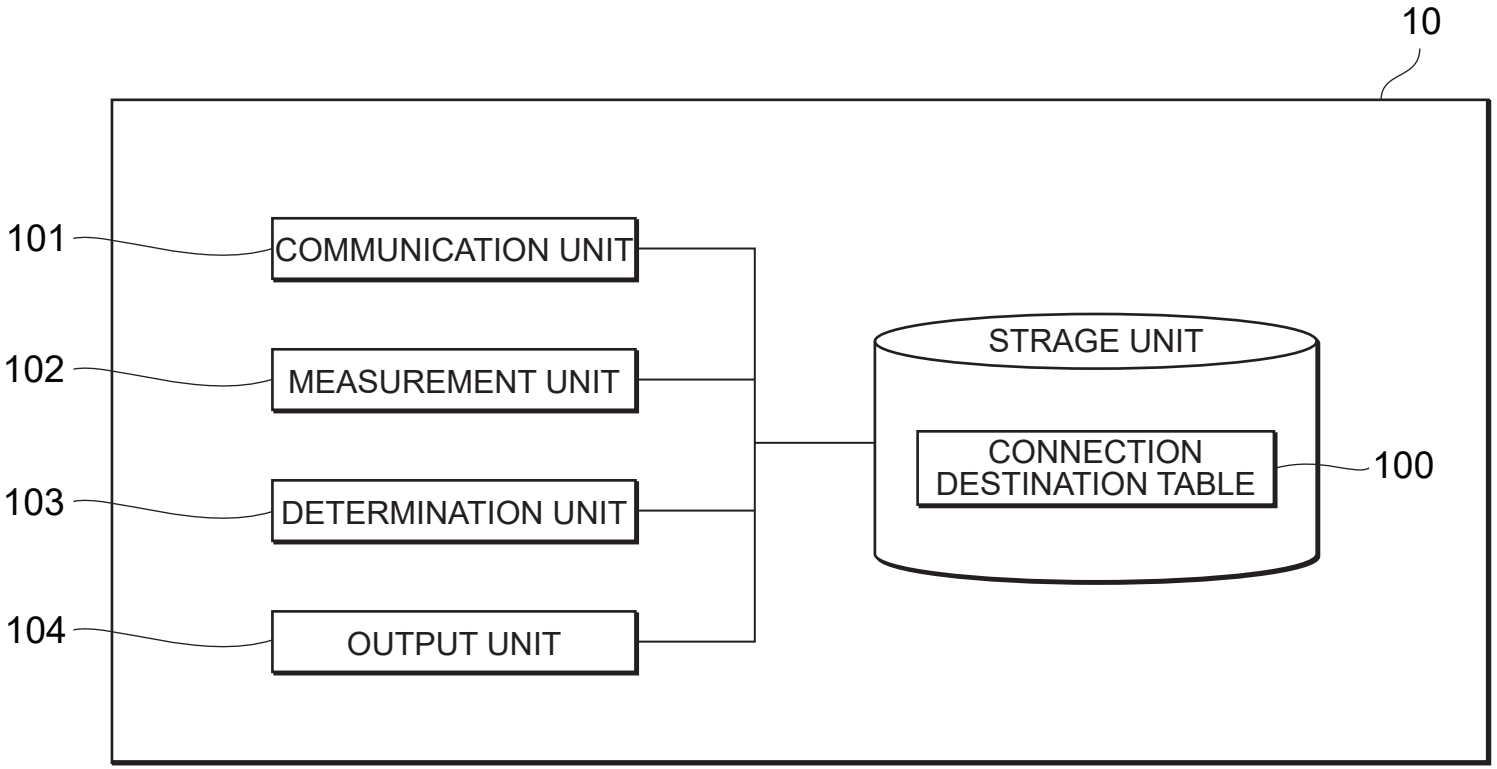
10
101
COMMUNICATION UNIT
102
MEASUREMENT UNIT
103
DETERMINATION UNIT
104
OUTPUT UNIT
STRAGE UNIT
CONNECTION DESTINATION TABLE
100

FIG. 6

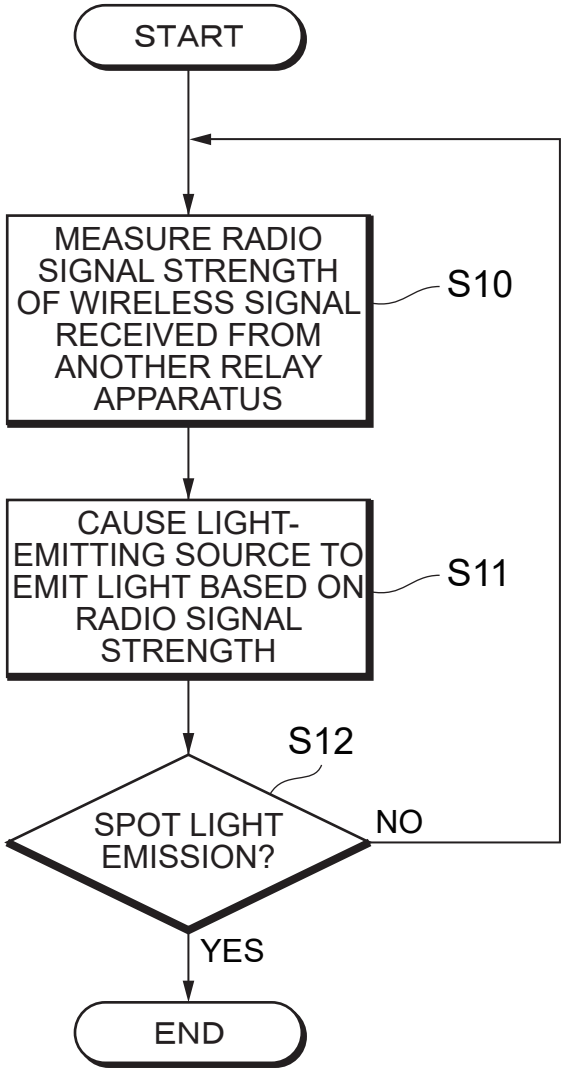
START
MEASURE RADIO SIGNAL STRENGTH OF WIRELESS SIGNAL RECEIVED FROM ANOTHER RELAY APPARATUS
S10
CAUSE LIGHT-EMITTING SOURCE TO EMIT LIGHT BASED ON RADIO SIGNAL STRENGTH
S11
S12
SPOT LIGHT EMISSION?
NO
YES
END

FIG.7

① POWER	GREEN	FLASHING	SYSTEM STARTING UP
		STAYING LIT	SYSTEM STARTUP COMPLETE
② STATUS	GREEN	STAYING LIT	CONNECTED TO NEIGHBORING NODE
	ORANGE	FLASHING	SEARCHING FOR NEIGHBORING NODE BY CHANGING CHANNEL
	RED	FLASHING	PERFORMING CAC ON 5 GHz WIRELESS BACKHAUL
③ 2.4GHz	GREEN	STAYING LIT	2.4 GHz AP FUNCTION ENABLED
		FLASHING	WIRELESS COMMUNICATION OCCURRING AT AP
④ INDICATOR	ALWAYS LIT GREEN AT PARENT NODE		
	INDICATES RADIO SIGNAL CONDITION OF 5 GHz WIRELESS BACKHAUL AT CHILD NODE		
	GREEN	STAYING LIT	RADIO SIGNAL CONDITION IS GOOD
	ORANGE	STAYING LIT	RADIO SIGNAL CONDITION IS NORMAL
	RED	STAYING LIT	RADIO SIGNAL CONDITION IS POOR (INSTALLATION LOCATION ADJUSTMENT REQUIRED)
	-	LIGHTS-OUT	CANNOT CONNECT TO UPSTREAM NODE (INSTALLATION LOCATION ADJUSTMENT REQUIRED)
⑤ OPERATION	ORANGE	STAYING LIT	OPERATING AS PARENT APPARATUS
	GREEN	STAYING LIT	OPERATING AS CHILD APPARATUS

FIG.8

RADIO SIGNAL CONDISION VISUALIZATION	ADDITIONAL EQUIPMENT	PURPOSE
BACKHAUL COMMUNICATION	NONE	SIMPLIFIED INSTALLATION
SPOOFED AP DETECTION	NONE	ALARM FUNCTION / USER SECURITY
USAGE STATUS VISUALIZATION	NONE	COMMUNICATION CAPACITY MONITORING
NUMBER OF ACCESSES	NONE	USAGE TREND MONITORING
ACCESS COMMUNICATION CAPACITY	NONE	USAGE TREND MONITORING / HANG-UP AVOIDANCE
COMMUNICATION LINE DISCONNECTION DETECTION	NONE	WAN-SIDE FAILURE DETECTION FOR OPTICAL LINE / LTE / SATELLITE COMMUNICATION, ETC.
AMBIENT RADIO WAVES	FREQUENCY TO BE DETECTED (WITH DONGLE PRODUCT)	EAVESDROPPING / HIDDEN CAMERA
	FREQUENCY TO BE DETECTED (WITH DONGLE PRODUCT)	ANTI-DRONE
	FREQUENCY TO BE DETECTED (WITH DONGLE PRODUCT)	NOISE DETECTION
WARNING LIGHT	DETECTION DEVICE / SYSTEM SUCH AS CAMERA OR SENSOR	WARNING ACCORDING TO PURPOSE