IPOS COPY
9610507-7



# PRINTING SYSTEM FOR SECTIONAL CIRCULAR CONTAINER

## BACKGROUND OF THE INVENTION

### 1. FIELD OF THE INVENTION

This invention relates to a printing system for a sectional circular container in order to carry out additional printings with an ink-jet printer at a specified location on the circumference of the sectional circular container previously printed on (its circumference) with a transfer drum.

### 2. DESCRIPTION OF THE RELATED ART

In a conventional gravure-offset printing press, ink is transferred from an inscription roller to a transfer drum once, so that the inscription roller has been required to be changed from the view of the markings, for example, the date which is frequently needed to be changed. Consequently, the inconvenience of changing the inscription roller every time and the necessity of multiple inscription rollers has caused a lot of time and effort for the conventional gravure-offset printing press' managing and keeping.

On the other hand, an ink-jet printer (IJP), being capable of having its printing patterns easily changed and having high processing ability, is known as a convenient system which can easily print additions, such as a date marking, onto the container.

However, for example, as shown in Fig. 5, in the case when the additions, such as the date marking, are printed onto a specified position on the circumference of each sectional circular container 2, having previously been printed on the circumference of each container 2 with the transfer drum 1, each container 2 freely rotates (on its own axis) by conveying each printed container 2 in the direction A by using a conventional side-belt conveying method. A disadvantage, in which it is difficult to print (an accurately matched printing) with the IJP at the specified position on the circumference of the container during conveyance, is produced.

Incidentally, a reference numeral 3 is a side belt, a reference numeral 4 is a guide rail, a reference numeral 5 is a driving rotor for the side belt, and a reference numeral 6 is a timing screw.

The present invention is concerned from the view of the disadvantage of the aforementioned conventional art, consequently, it is an object of the present invention to provide the printing system for the sectional circular container which is capable of having the additions printed with the IJP at the specified position on the circumference of the sectional circular container.

## SUMMARY OF THE INVENTION

A printing system for a sectional circular container according to the present invention, which has additions printed with an ink-jet printer at a specified position on the circumference of the sectional circular container previously printed on by a transfer drum, includes: a conveyer means, for conveying the container, provided at the position downstream, in the rotating direction of the transfer drum, just after the transfer drum, and in which the conveyer means conveying the container fixes the container not to rotate; and an ink-jet printer for printing on the circumference of the container during the conveyance.

According to the present invention having the aforementioned structure, since the conveyer means conveying the container fixes the container not to rotate, the container is in the fixed state while being conveyed by the conveyer means. Consequently, when the additions are printed, the position on the surface of the container relative to the IJP is usually fixed.

The container is in the fixed state while being conveyed by the conveyer means, so that the adjustment of the position on the surface of the container relative to the IJP is made possible by adjusting the position of the container on the conveyer means. Therefore, in the present invention, by providing an agreement fine-tuning guide to extend parallel to the conveyer means, the length of the guide (in the direction that the container is conveyed) and the contact pressure between the guide and the conveyed container, in contact with the guide, can be adjusted.

In the range where the agreement fine-tuning guide is provided, the container, having the additions printed on it, contacts the guide and continues to move while rotating (on its own axis). Consequently, when the length of the agreement fine-tuning guide, in the direction that the container is conveyed, and the distance between the container and the guide (namely, the contacting pressure between the container and the guide) is adjusted, the rotational frequency of the rotation of the container is controlled. As a result, when the rotational frequency of the rotation of the container is controlled, the position on the container relative to the IJP can be adjusted.

Further, according to the present invention, the conveyer means is a suction conveying apparatus conveying the container in such manner as to maintain the container to be sucked on a sucking hole that is opened on a conveyer belt. In this case, it is advisable that the driving source of the conveyer belt be the same as the driving source of the transfer drum.

## BRIEF DESCRIPTION OF THE DRAWINGS

Fig. 1 is a block diagram of a printing system of the preferred embodiment according to the present invention;

Fig. 2 is a perspective view of a suction conveying apparatus shown in Fig. 1;

Fig. 3 is a sectional view taken along the X-X line in Fig. 2;

Fig. 4 is a flow chart showing the control mechanisms in Fig. 1;

Fig. 5 is a plane view showing an example of a conventional art;

Fig. 6 is a plane view of the suction conveying apparatus shown in Fig. 1;

Fig. 7 is a plane view showing an agreement fine-tuning guide shown in Fig. 1; and

Fig. 8 is a plane view shown from F8 in Fig. 7.

## DETAILED DESCRIPTION OF THE PREFERRED EMBODIMENT(S)

The preferred embodiments of the present invention will be explained in detail below with reference to the attached drawings.

In the drawings, the same reference numerals will be used to designate the same or similar components of the conventional art, so that the description will be omitted or simplified.

Fig. 1 is a plane view showing the appearance of the overall composition of a printing system for a sectional circular container according to the present invention, in which a belt 15 of a suction conveying apparatus is provided at a position where printing is finished by a transfer drum 1. In Figs. 2, 3 and 6, the belt 15 has a multiple of sucking holes 15a that are opened on the central line in the longitudinal direction of the belt 15, and further, a multiple of holes 21b, being slightly larger than the sucking holes 15a that are opened on the belt 15, are opened on the central line on a slide face 21a of a suction box 21 which sucks the belt 15 in the longitudinal direction. The suction box 21 is connected by an air intake tube 17 to an air intake device 16. The belt 15 is provided with rollers 23 and 24 capable of rotating, such that the belt 15 runs on the slide face 21a of the suction box 21, due to a roller 22 driven by a driving device 11, and is served with tension caused by a tension roller 25.

A printing nozzle-head 10 of an ink-jet printer 20 is fixed to be perpendicular to the belt 15. A sensor 13, detecting and relaying the position of the additions printed on the container, and a rotary encoder 12 of the driving device 11 are connected to an interface 18 through an electric circuit, in which the interface 18 is connected to a control box 19, and the printing nozzle-head 10 is connected to the control box 19. A reference numeral 9

shows an agreement fine-tuning guide fine-tuning a position printed on the container 2.

The agreement fine-tuning guide 9 is illustrated in detail in Figs. 7 and 8. In Figs. 7 and 8, the agreement fine-tuning guide 9, composed of a cylinder-shaped member, is combined together with a plate-like member 42. The combination of the agreement fine-tuning guide 9 and the plate-like member 42 are attached with screws 44 to a cover member 46 placed to be across from the transfer drum 1.

As shown in Fig. 8, the combination of the agreement fine-tuning guide 9 and the plate-like member 42 is attached to the cover member 46 (Fig. 7) by screwing screws 44 respectively inserted into elliptical holes 48 formed in the plate-like member 42. At this time, by adjusting the positions of the elliptical holes 48 relative to the screws 44, the pressure added to the container 2 between the transfer drum 1 and the guide 9 (the pressure shown with an arrow P in Fig. 8) can be adjusted.

As described above, in the range where the agreement fine-tuning guide 9 is provided, the container 2, printed with the additions, touches the guide 9 and continues to move while rotating (on its own axis), therefore, when the length of the guide 9 is adjusted in the direction that the container is conveyed (the length in the direction of an arrow L in Fig. 7), the rotational frequency, by rotating the container on its own axis, is controlled, with the result that the position on the container 2 relative to the IJP is adjusted. The adjustment of the length of the guide 9 in the direction of the arrow L is not needed to be carried out more than once. Consequently, as shown in Fig. 7, the agreement fine-tuning guide 9 is adjusted with its length in the direction of the arrow L by removing the part illustrated with the dotted line.

As shown in Figs. 2, 3 and 6, materials of the conveyer belt can be, for example, nylon or cloth and each interval between the sucking holes is not limited, but it is advisable that the bottom of the container 2 is covered with at least two sucking holes, in order to certainly prevent the container 2 from rotating, as shown in Fig. 2. And further, it is desirable that the suction force in the case of using a polystyrene-made container is 600-1,200 mmAq.

The control for printing the additions will be explained in detail below with reference to Fig. 4.

The control box 19 causes the rotary encoder 12 to produce a pulse (Step S10), and judges whether the sensor 13 detects the container 2 or not (Step S11). When the judgment in Step S11 is NO, the flow returns to the beginning. When the judgment is YES, namely, when the container 2 is detected, the counting pulse is started (Step S12), and the counting is judged whether the counting becomes a specified frequency (Step S13). When the counting is judged as YES, a signal for starting printing is outputted to the IJP printing nozzle-head 10 (Step S14), and printing takes place along one line (Step S15).

The control box judges whether printing is completed or not (Step S16), and further, when the judgment is YES, the control box judges whether the specified printing, namely, the additional printing for the specified marking is completed or not (Step S17). When the judgment is NO, the flow returns to Step 12, and when the judgment is YES, the control is completed.

Since the present invention is structured as described above, after printing the conventional gravure-offset printing, markings, for example, the date which changes every day, can be printed such as to be added at the same position on the surface of the container by the simple structure. Further, the position of printing the additions can be easily changed by adjusting the length of the agreement fine-tuning guide in the direction that the container is conveyed and the contact pressure between the guide and container.

## WHAT IS CLAIMED IS:

1. A printing system for a sectional circular container, which prints additions with an ink-jet printer at a specified position on the circumference of the previously printed on, by a transfer drum, sectional circular container, said printing system for the sectional circular container comprising:

a conveyer means, for conveying the container, provided at the position downstream, in the rotating direction of the transfer drum, just after the transfer drum, said conveyer means conveying the container fixes the container not to rotate; and

an ink-jet printer for printing on the circumference of the container during conveyance.

2. The printing system for the sectional circular container according to Claim 1, wherein said conveyer means is composed of a suction conveying apparatus conveying the container in such a manner as to maintain the container to be sucked on a sucking hole opened on a conveyer belt.

3. The printing system for the sectional circular container according to one of Claims 1 and 2, further comprising an agreement fine-tuning guide extending in a parallel direction to said conveyer means, and wherein the length of said agreement fine-tuning guide in the direction that the container is conveyed and the distance between said agreement fine-tuning guide and the container are adjusted.

Fig. 1

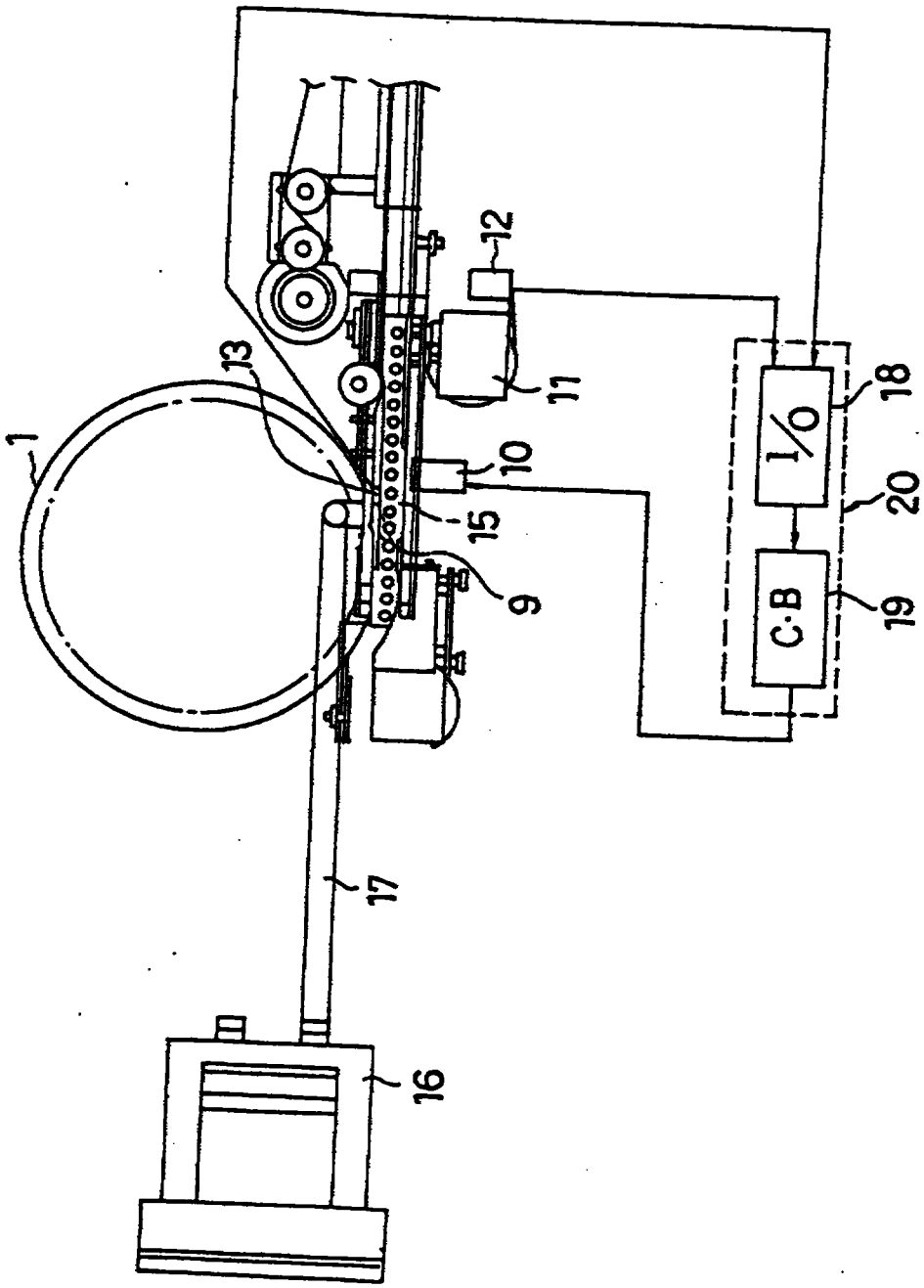

Fig. 2

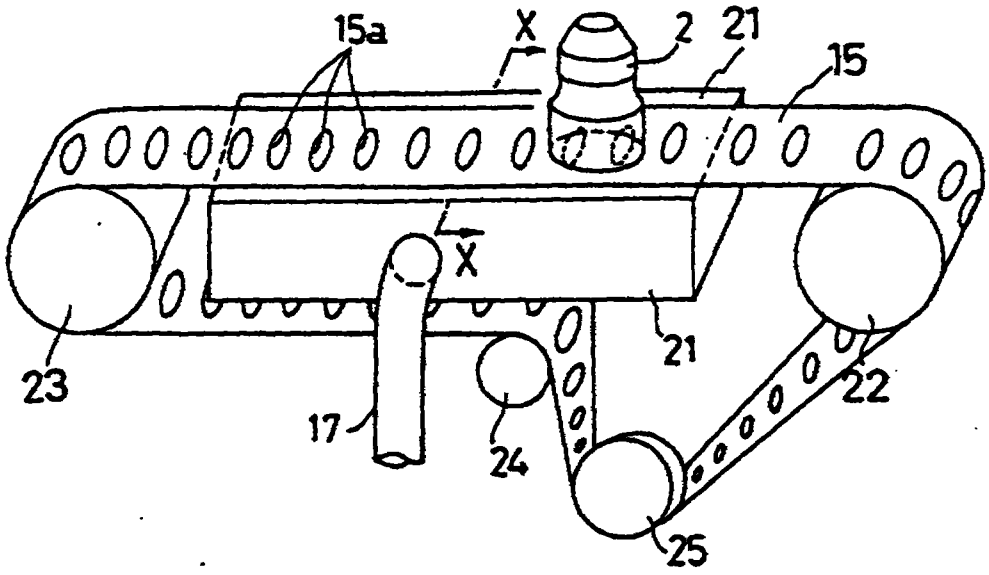


Fig. 3

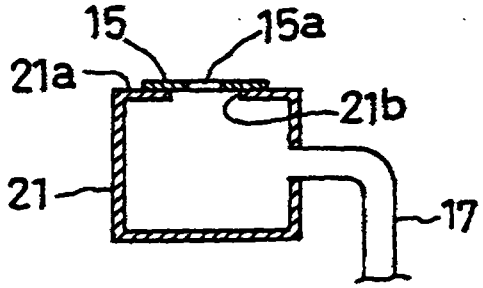

Fig. 4

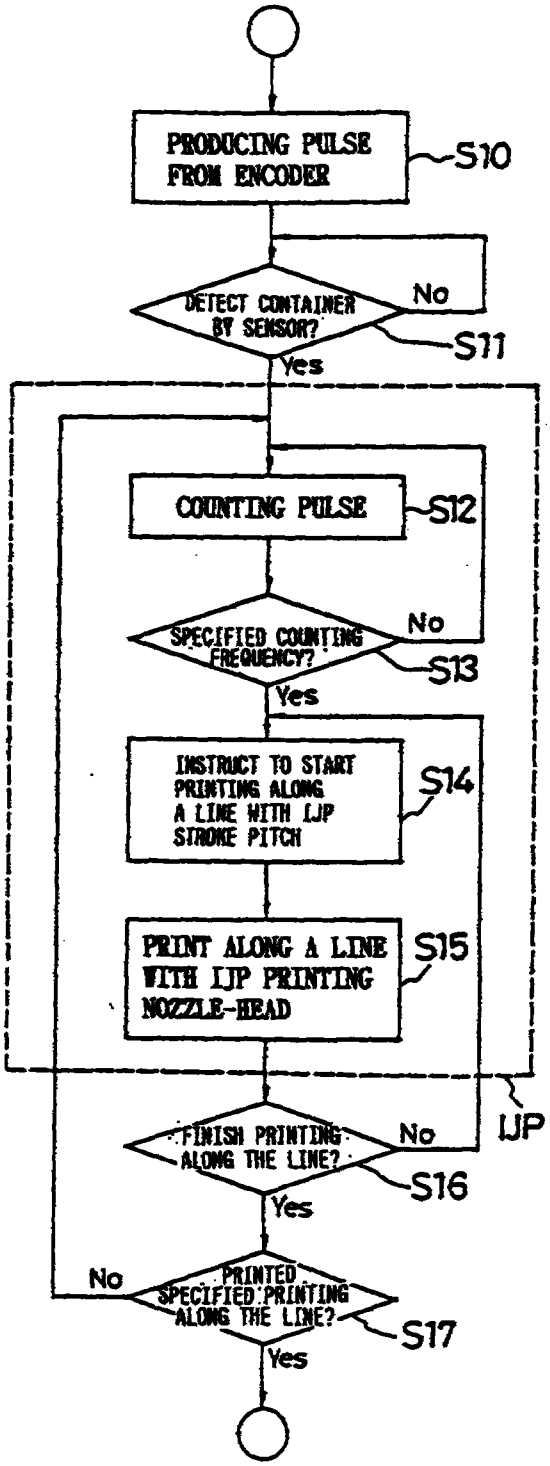
PRODUCING PULSE FROM ENCODER
S10
DETECT CONTAINER BY SENSOR?
No
S11
Yes
COUNTING PULSE
S12
SPECIFIED COUNTING FREQUENCY?
No
S13
Yes
INSTRUCT TO START PRINTING ALONG A LINE WITH IJP STROKE PITCH
S14
PRINT ALONG A LINE WITH IJP PRINTING NOZZLE-HEAD
S15
IJP
FINISH PRINTING ALONG THE LINE?
No
S16
Yes
No
PRINTED SPECIFIED PRINTING ALONG THE LINE?
S17
Yes

Fig. 5

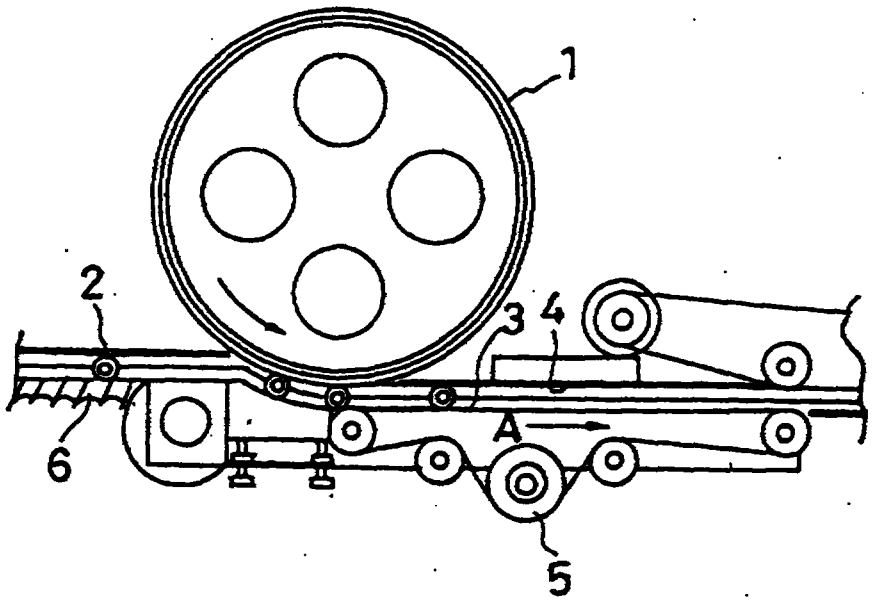


Fig. 6

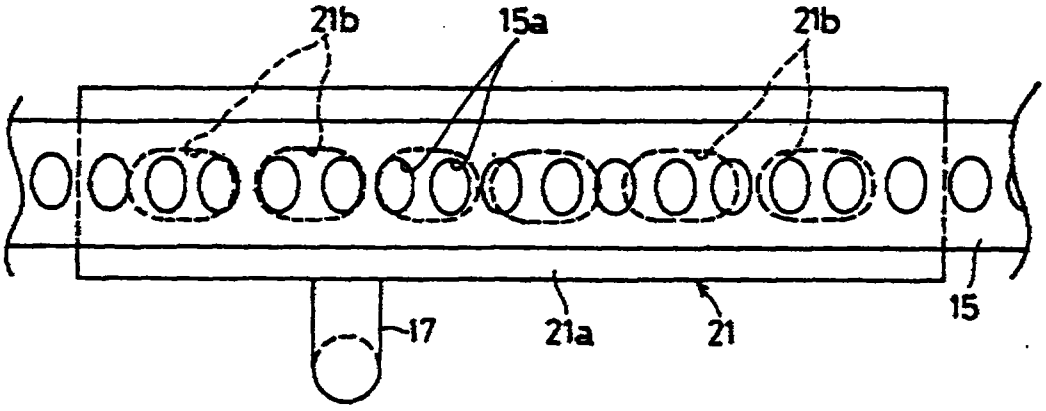

Fig. 7

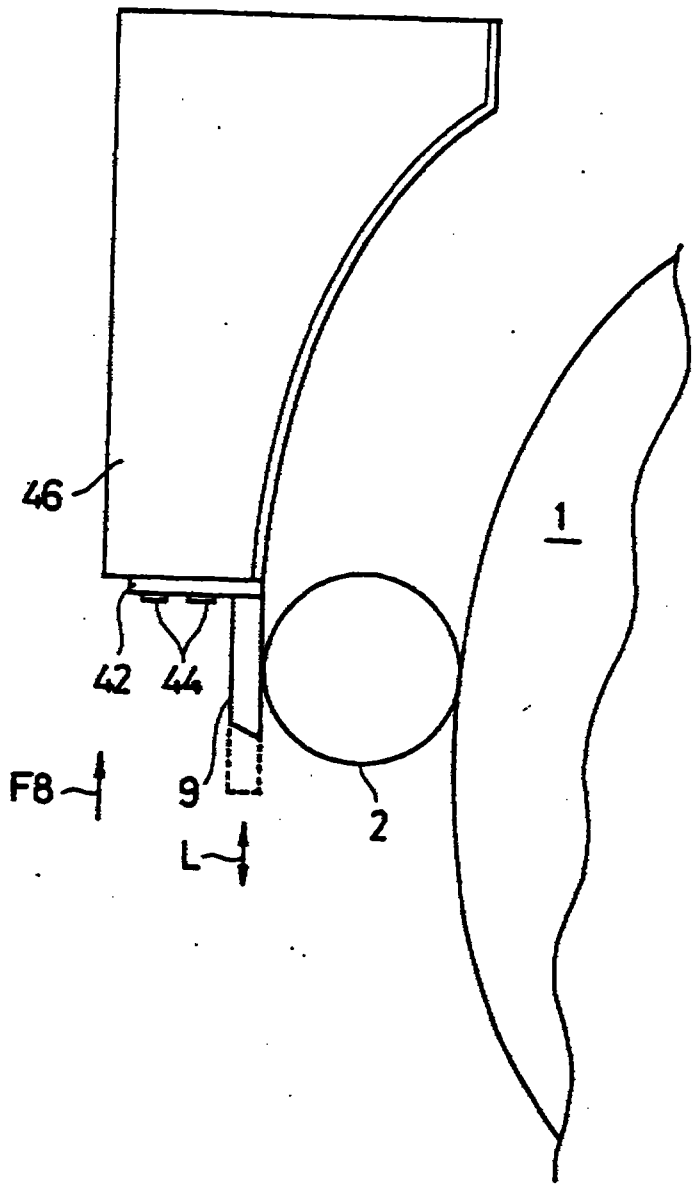

Fig. 8

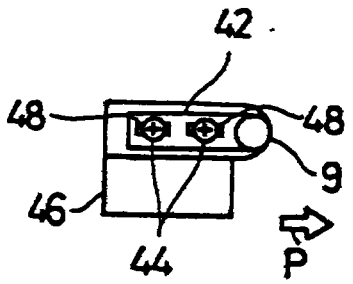

## ABSTRACT

## PRINTING SYSTEM FOR SECTIONAL CIRCULAR CONTAINER

A printing system for a sectional circular container capable of having additions printed at a specified position on the surface of the sectional circular container with an IJP. In the printing system for printing the additions with an ink-jet printer (20) at the specified position on the circumference of each sectional circular container (2), which is previously printed on by a transfer drum (1), a conveyer means is provided at the position downstream, in the rotating direction of the transfer drum (1), just after the transfer drum (1), and in which the conveyer means conveying each container (2) fixes the container (2) not to rotate, and the ink-jet printer (20) is provided to print on the circumference of each container during conveyance.

(Figure 1)