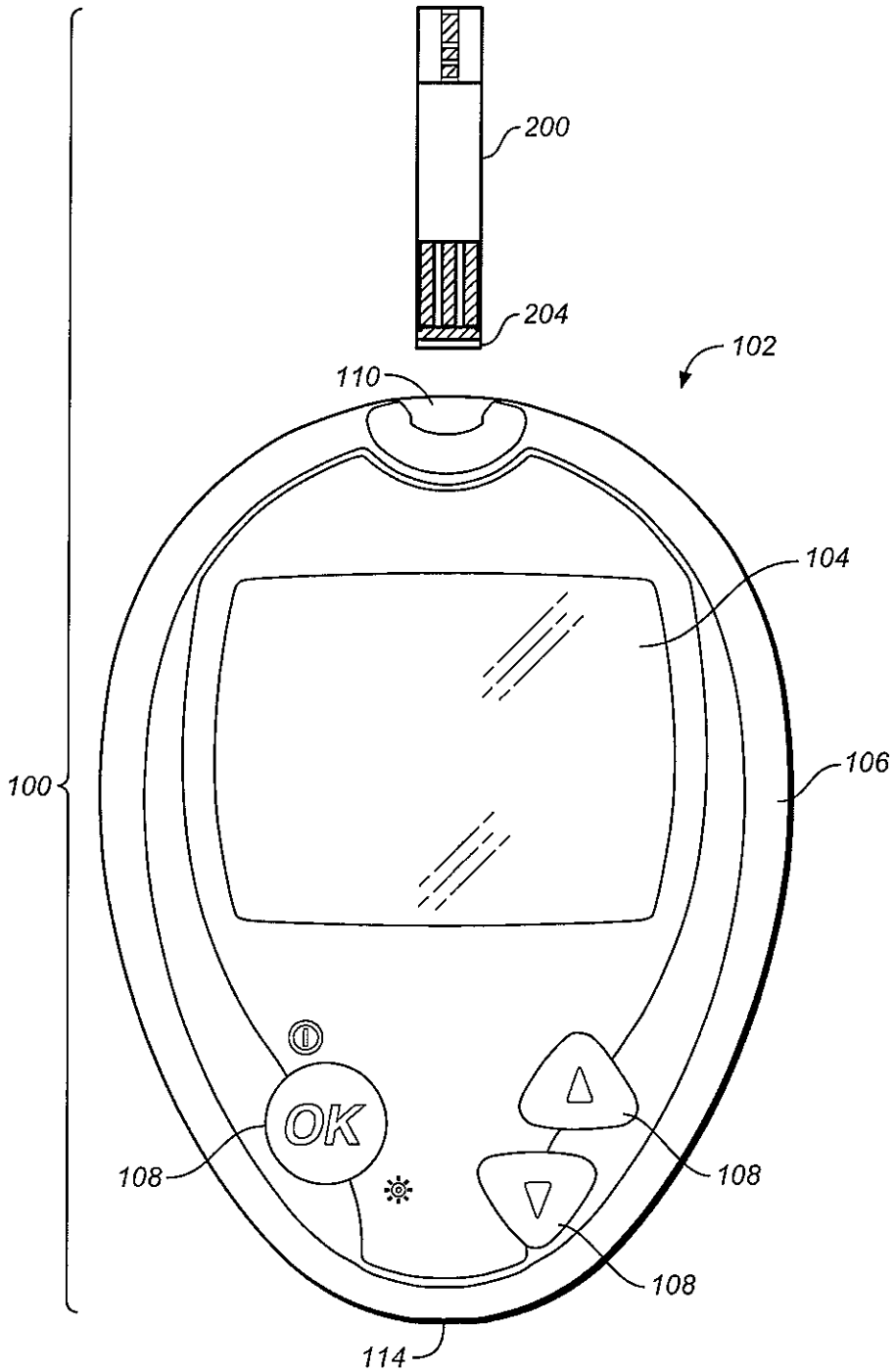

FIG. 1

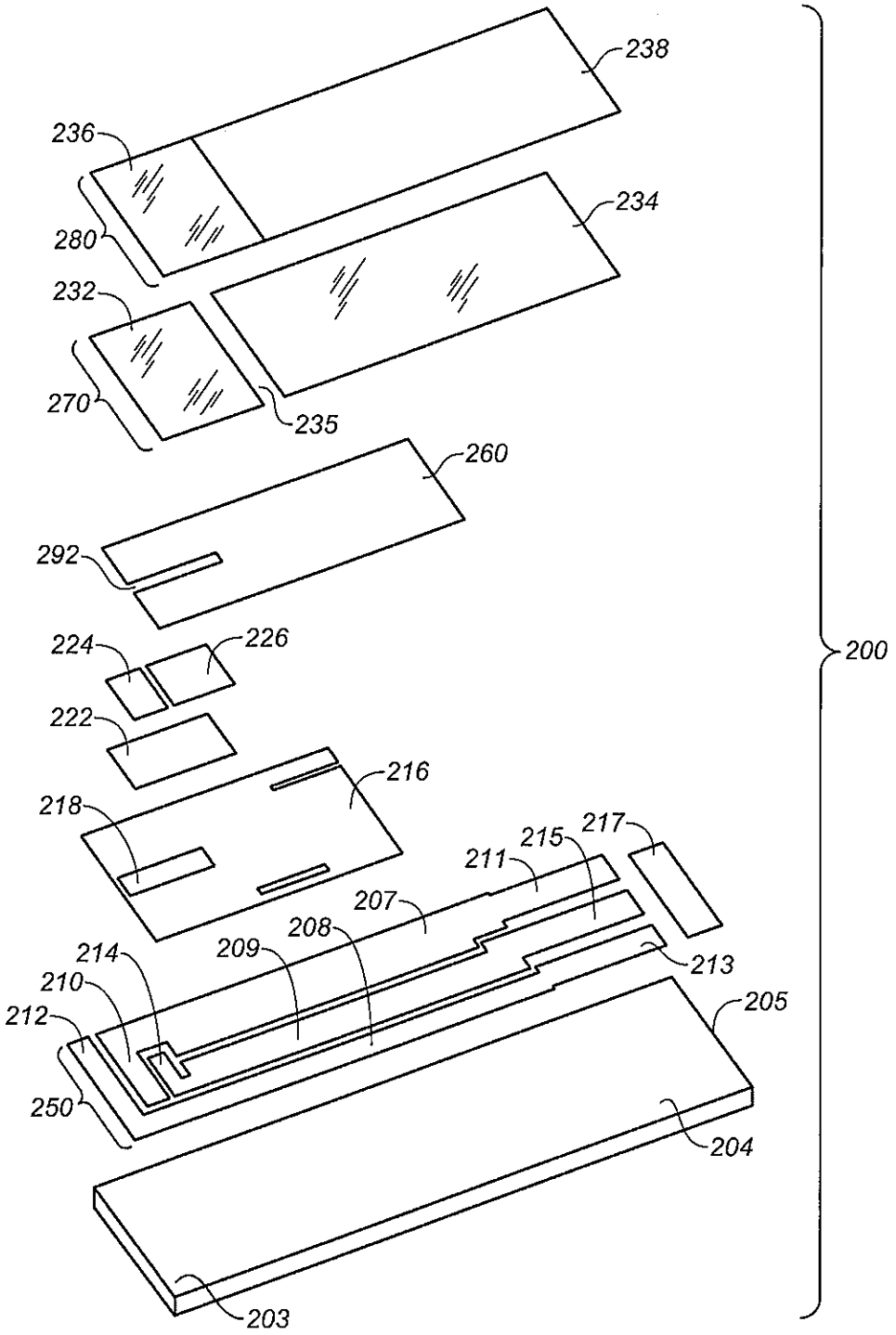
238
236
234
280
232
270
235
260
292
224
226
222
216
218
217
215
211
207
208
209
214
213
210
205
212
250
204
203
200

FIG. 2

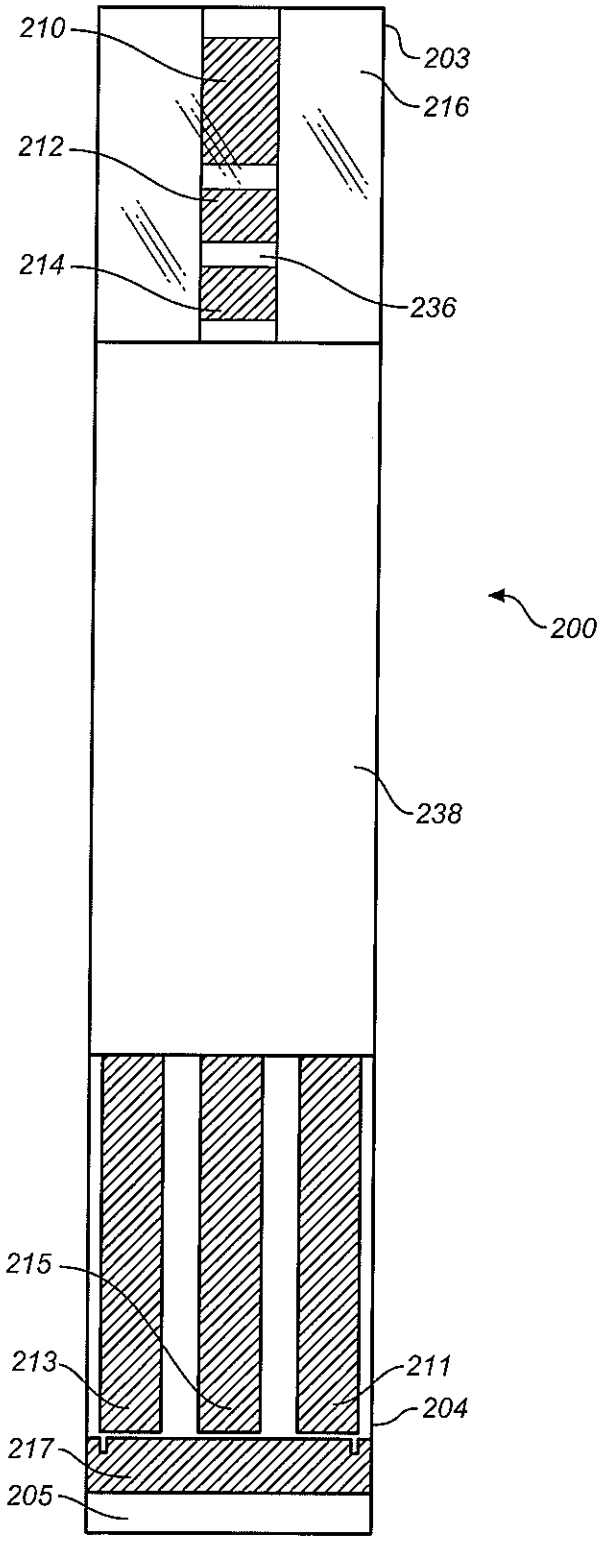

FIG. 3

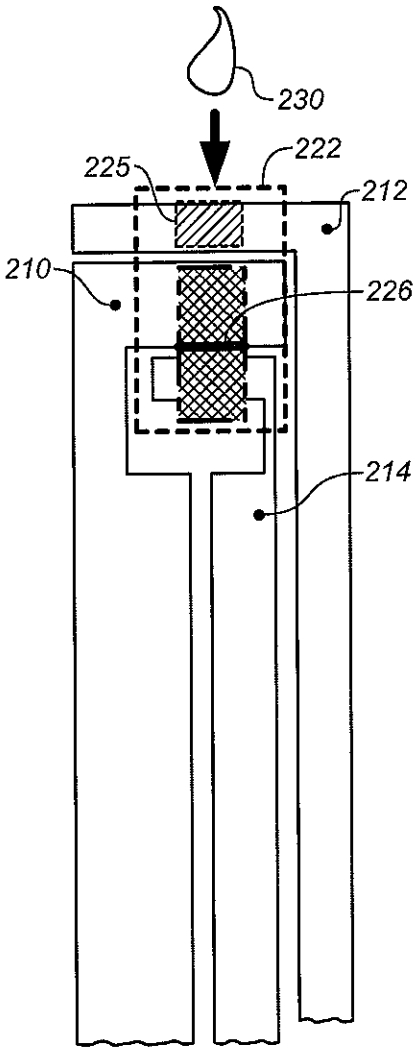

FIG. 4A

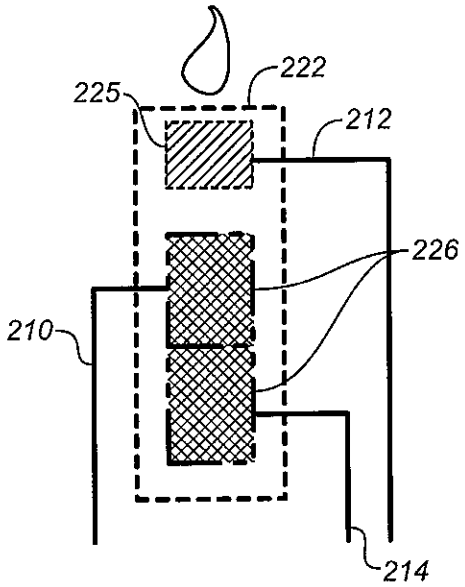

FIG. 4B

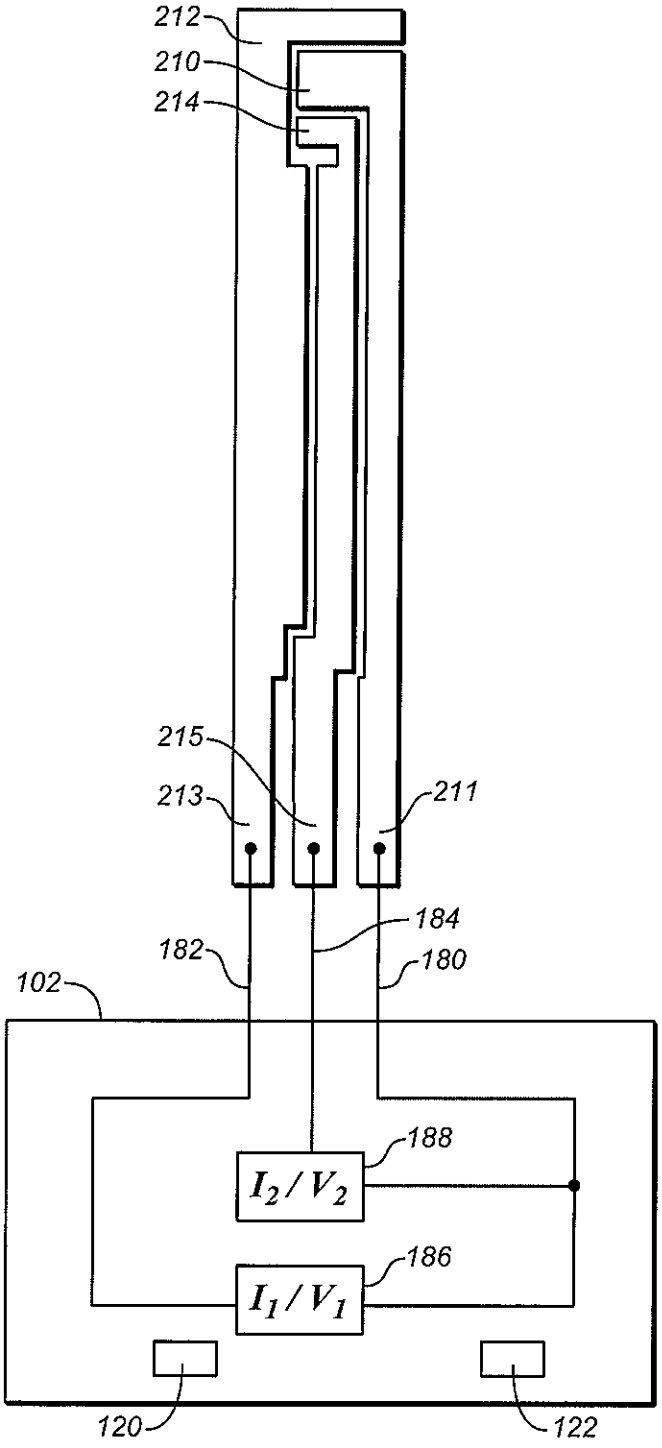
212
210
214
215
213
211
184
182
180
102
188
I_2 / V_2
186
I_1 / V_1
120
122

FIG. 5

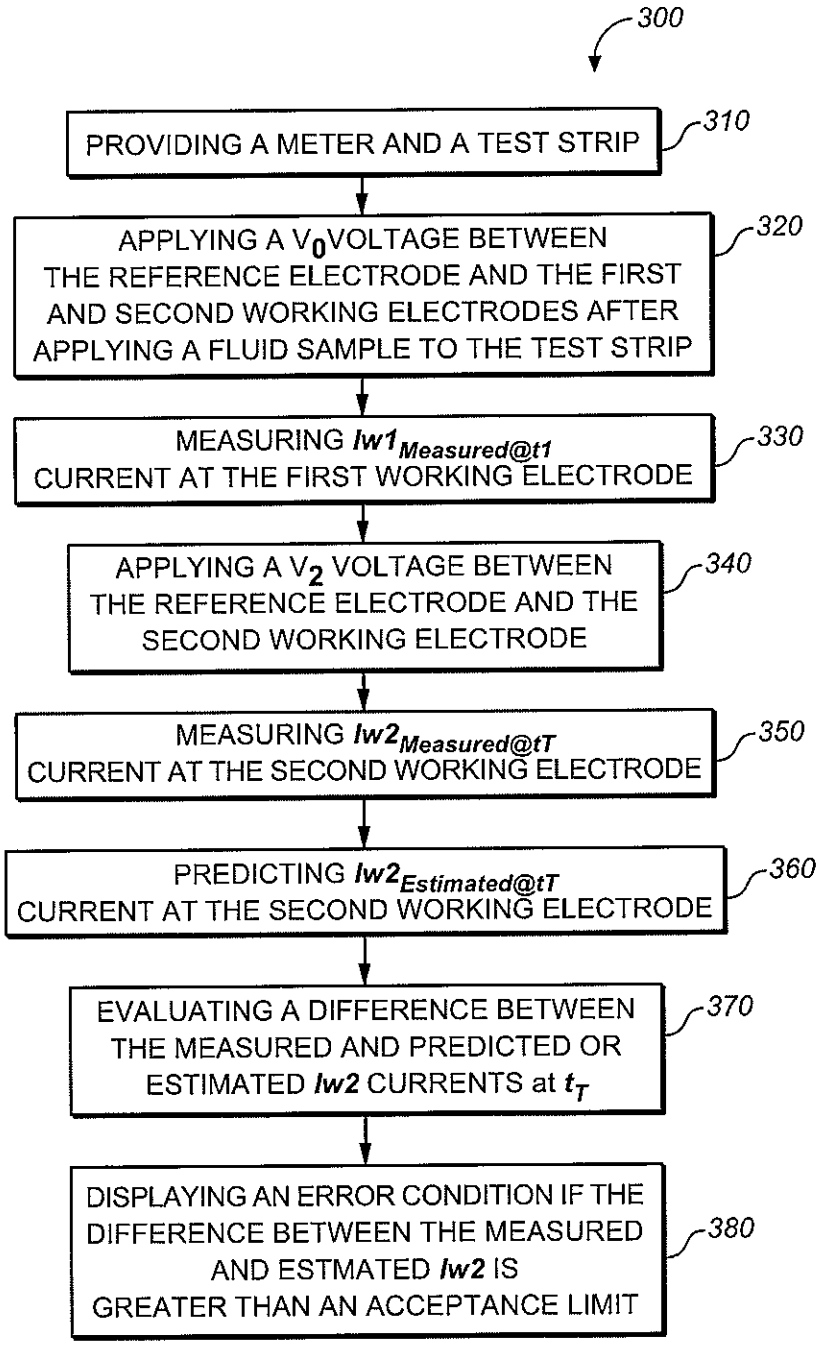
300
PROVIDING A METER AND A TEST STRIP
310
APPLYING A V_0 VOLTAGE BETWEEN THE REFERENCE ELECTRODE AND THE FIRST AND SECOND WORKING ELECTRODES AFTER APPLYING A FLUID SAMPLE TO THE TEST STRIP
320
MEASURING $Iw1_{Measured@t1}$ CURRENT AT THE FIRST WORKING ELECTRODE
330
APPLYING A V_2 VOLTAGE BETWEEN THE REFERENCE ELECTRODE AND THE SECOND WORKING ELECTRODE
340
MEASURING $Iw2_{Measured@tT}$ CURRENT AT THE SECOND WORKING ELECTRODE
350
PREDICTING $Iw2_{Estimated@tT}$ CURRENT AT THE SECOND WORKING ELECTRODE
360
EVALUATING A DIFFERENCE BETWEEN THE MEASURED AND PREDICTED OR ESTIMATED Iw2 CURRENTS at t_T
370
DISPLAYING AN ERROR CONDITION IF THE DIFFERENCE BETWEEN THE MEASURED AND ESTMATED Iw2 IS GREATER THAN AN ACCEPTANCE LIMIT
380

FIG. 6

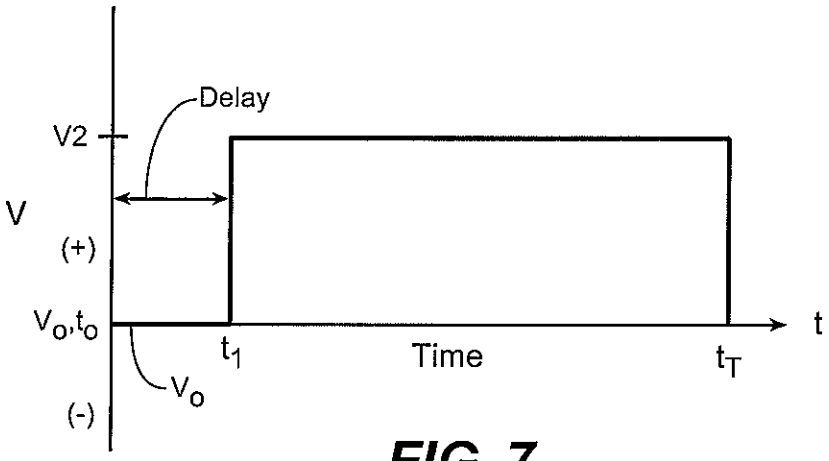

FIG. 7

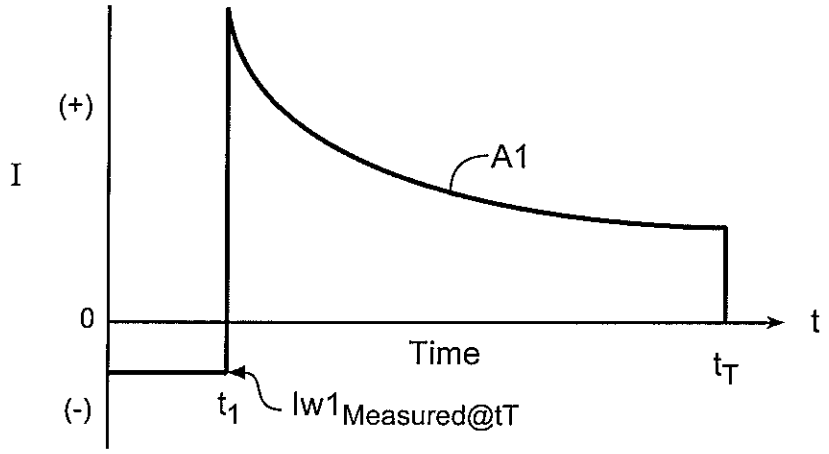

FIG. 8A

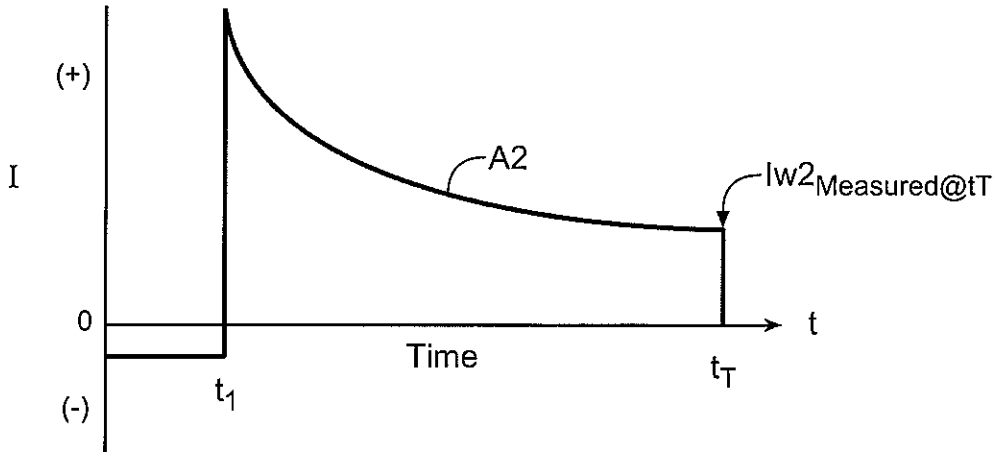

FIG. 8B

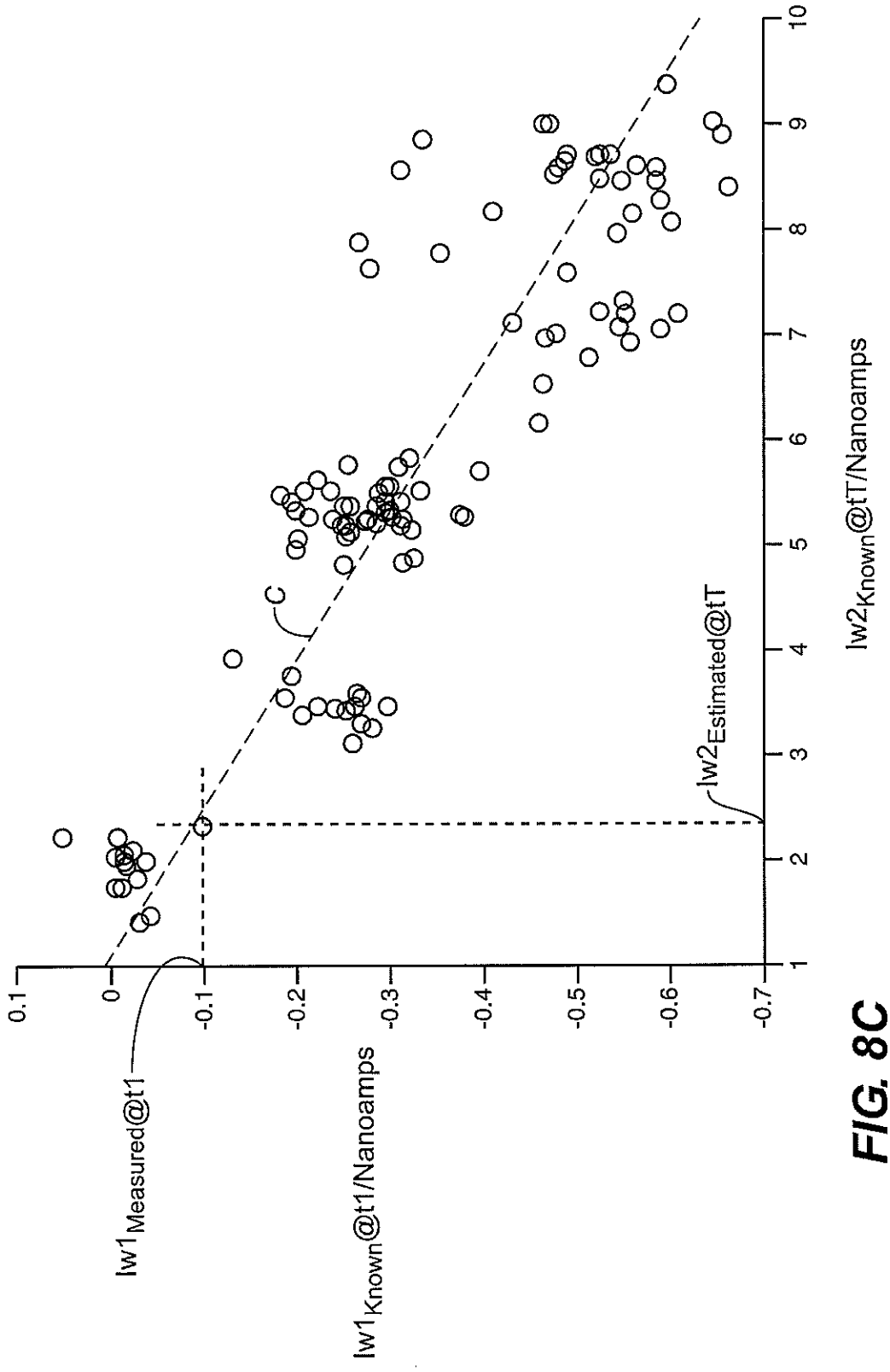
0.1
0
-0.1
-0.2
-0.3
-0.4
-0.5
-0.6
-0.7
1
2
3
4
5
6
7
8
9
10
$lw1_{Measured}@t1$
$lw1_{Known}@t1/Nanoamps$
C
$lw2_{Estimated}@tT$
$lw2_{Known}@tT/Nanoamps$

FIG. 8C

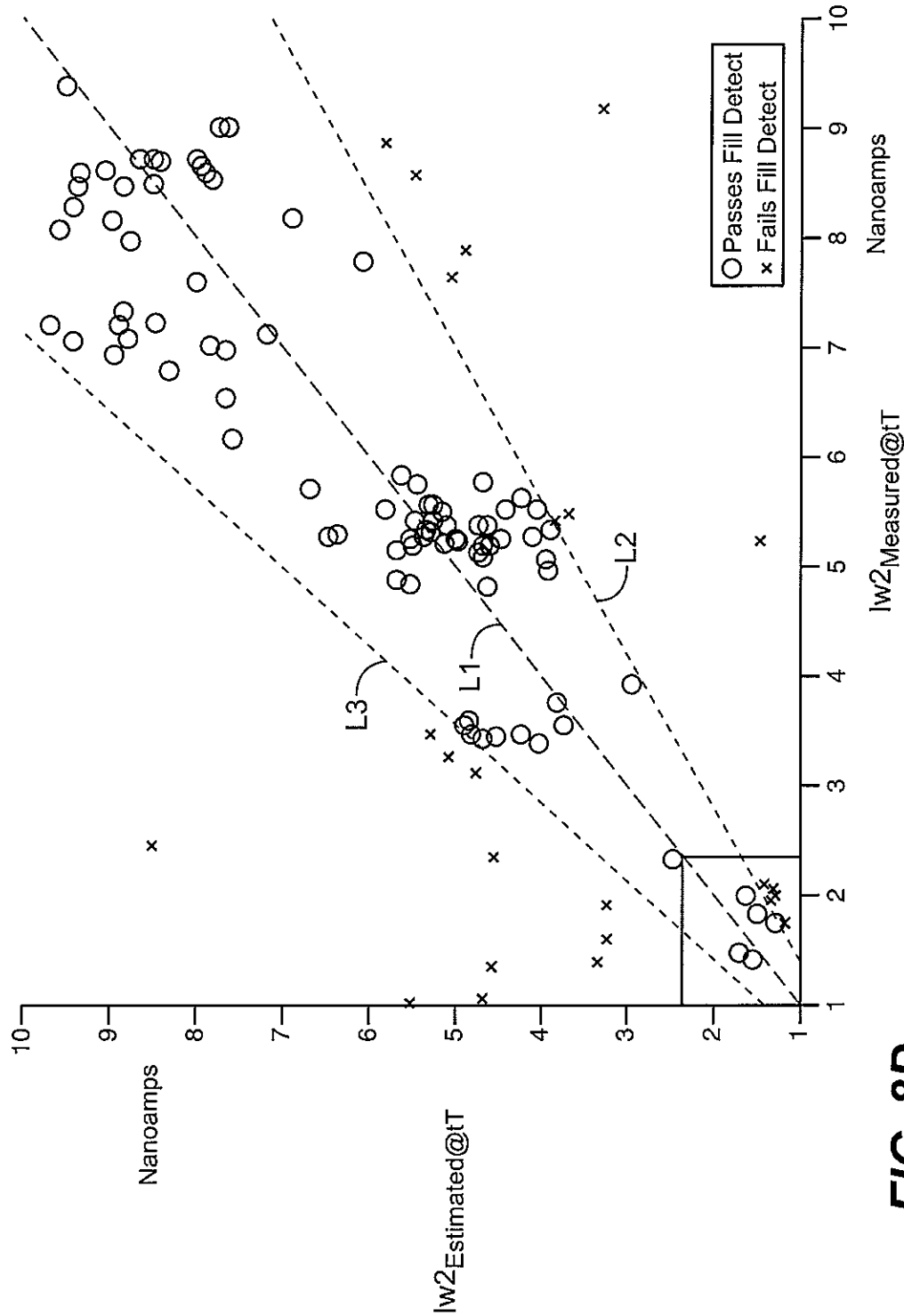
Passes Fill Detect
Fails Fill Detect
L1
L2
L3
Nanoamps
Nanoamps
Iw2Estimated@tT
Iw2Measured@tT

FIG. 8D

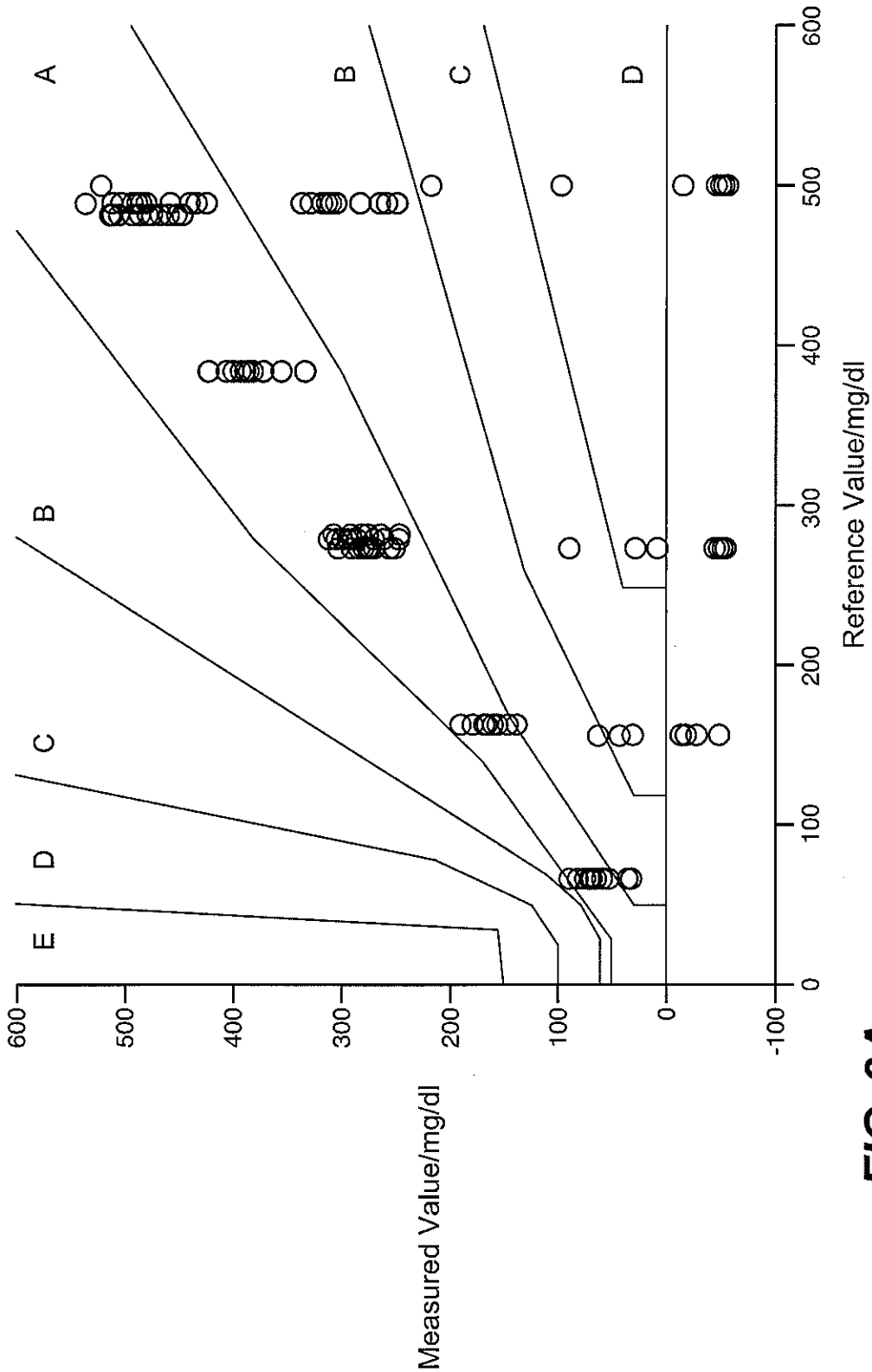
A
B
C
D
E
600
500
400
300
200
100
0
-100
Measured Value/mg/dl
0
100
200
300
400
500
600
Reference Value/mg/dl

FIG. 9A

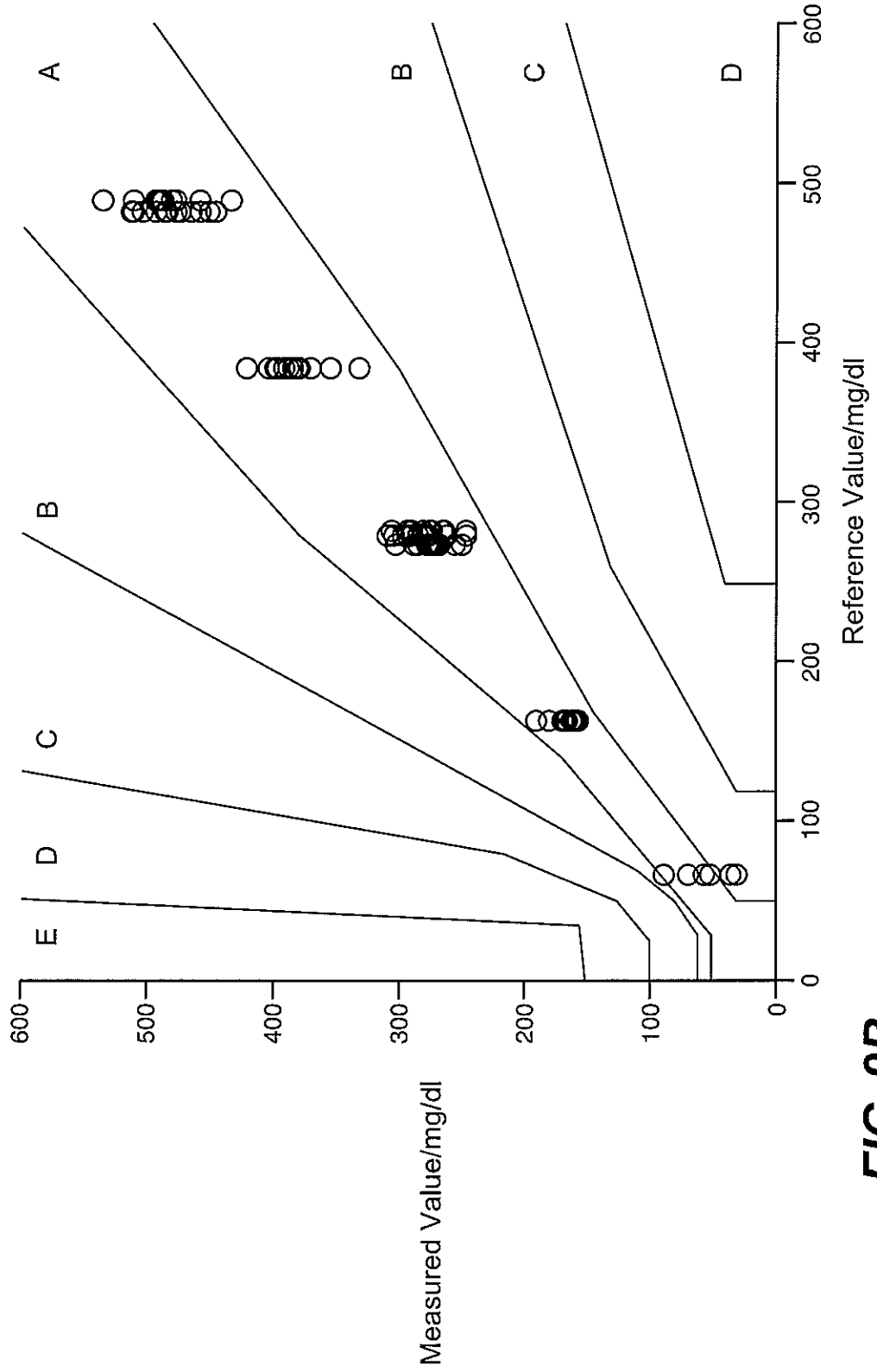
A
B
C
D
E
600
500
400
300
200
100
0
Measured Value/mg/dl
A
B
C
D
0
100
200
300
400
500
600
Reference Value/mg/dl

FIG. 9B