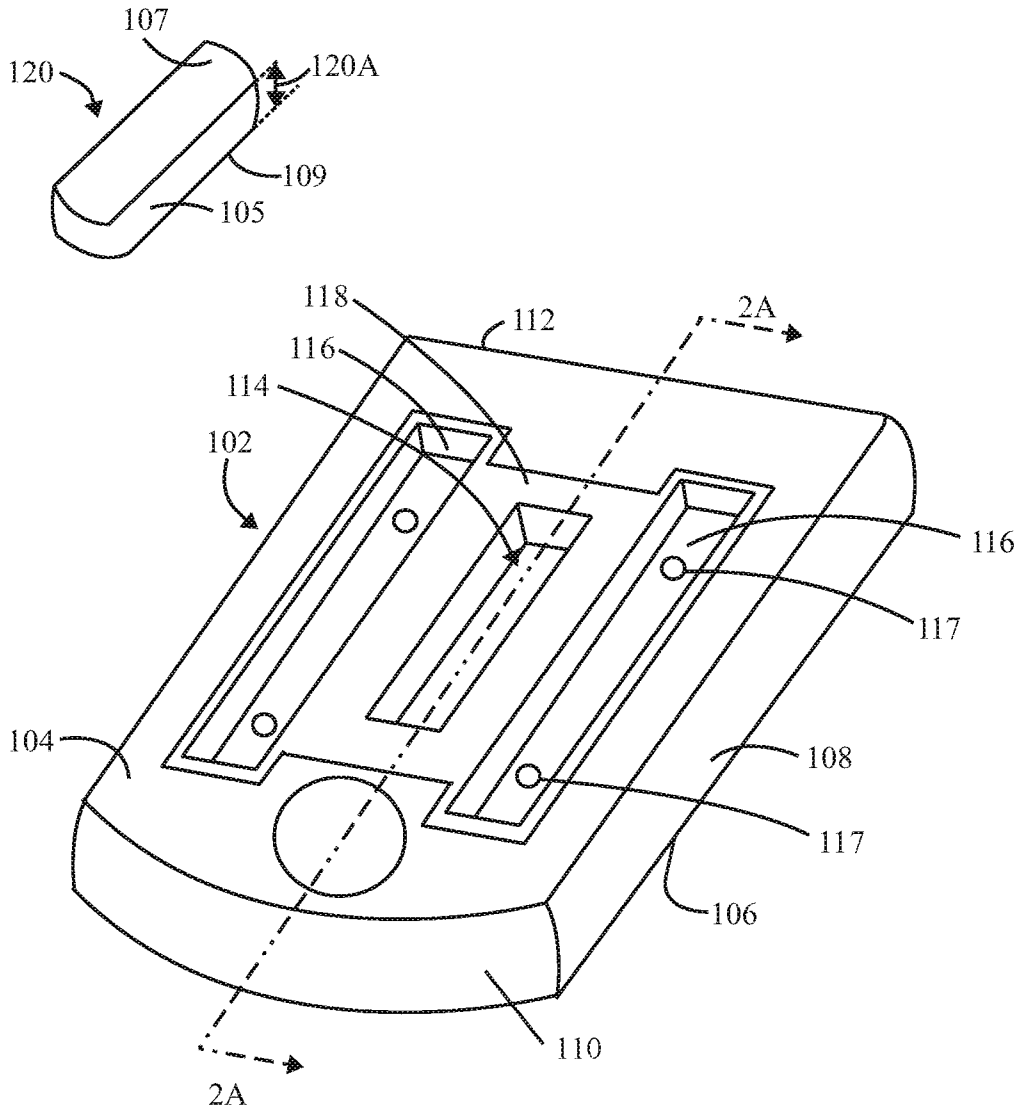
107
120
120A
109
105
118
112
2A
116
114
102
116
117
104
108
117
106
110
2A

Figure 1A

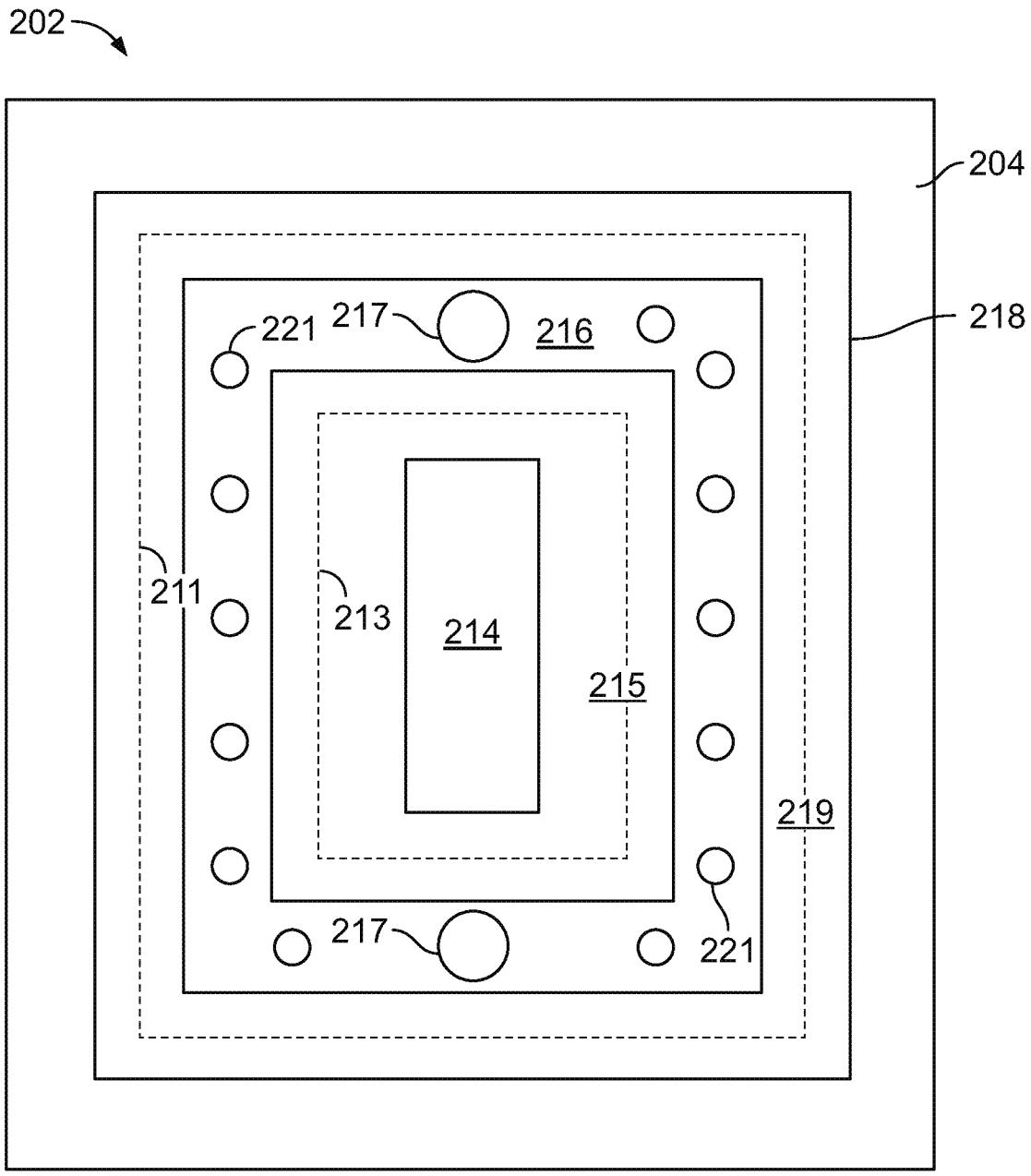

Figure 1B

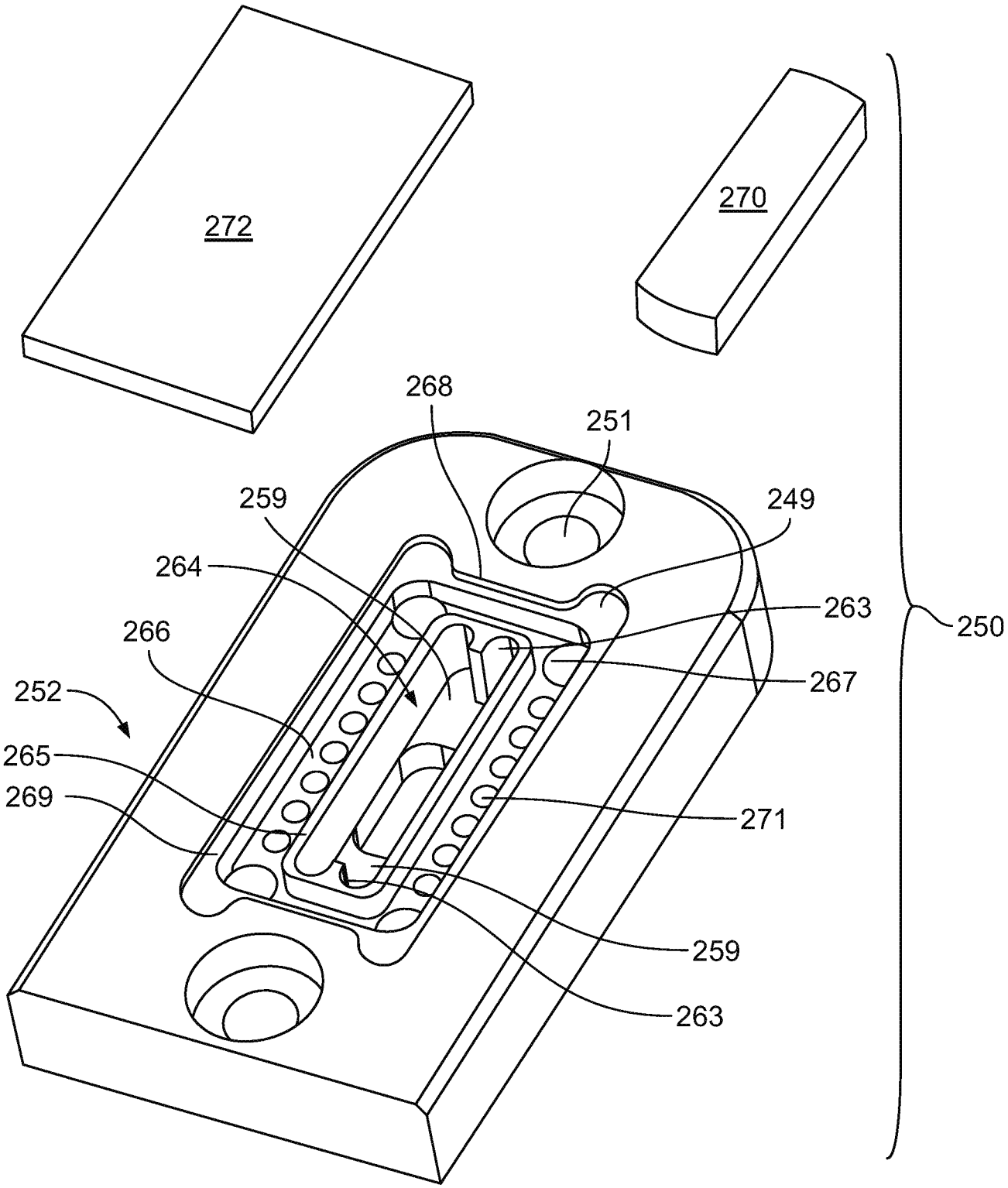
272
270
268
251
259
249
264
263
250
266
267
252
265
269
271
259
263

Figure 1C

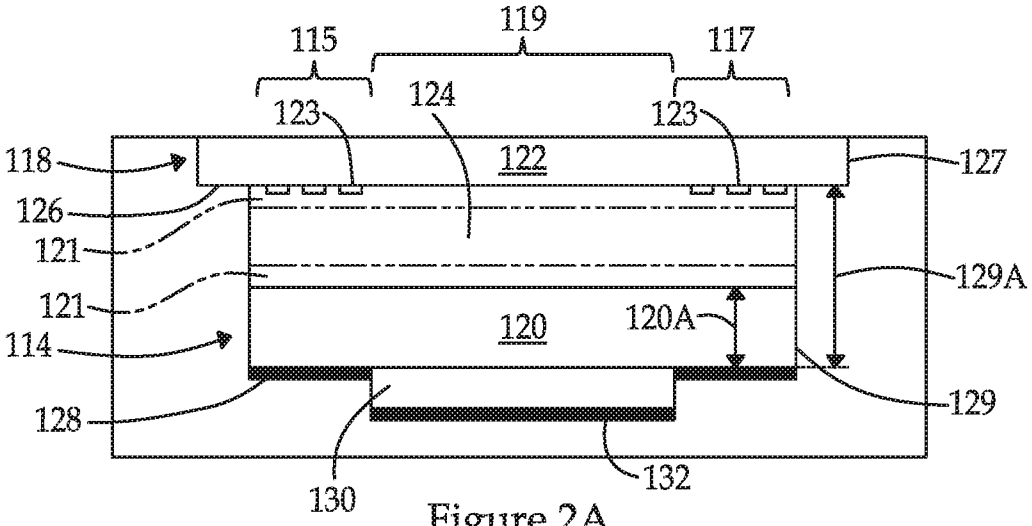

Figure 2A

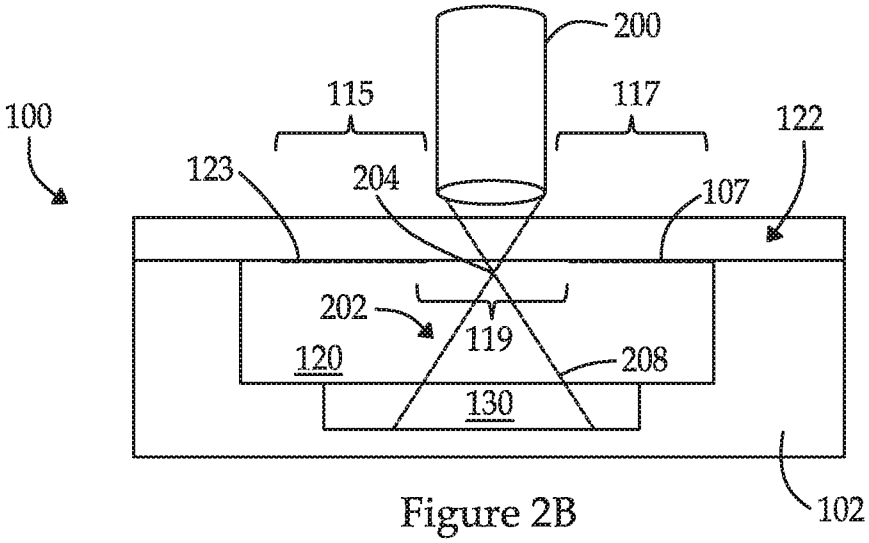

Figure 2B

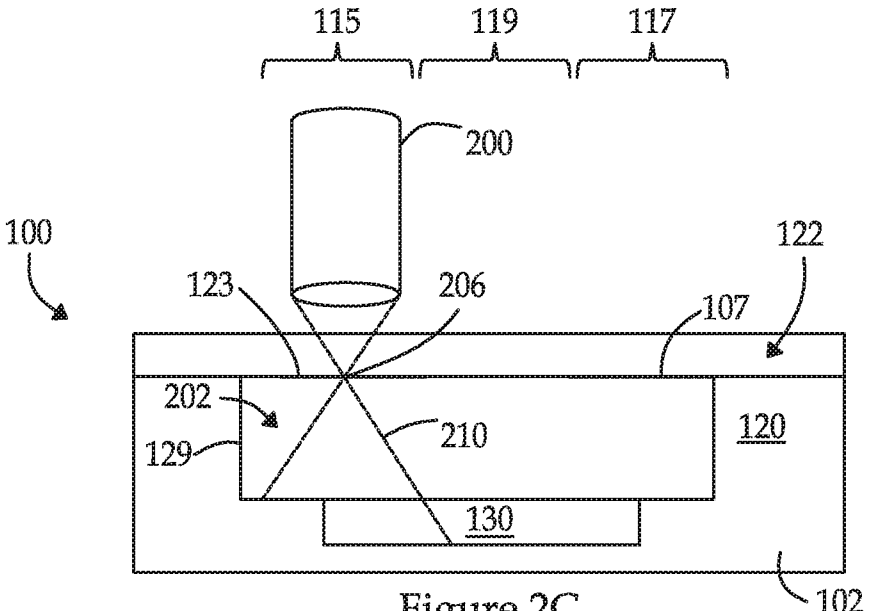

Figure 2C

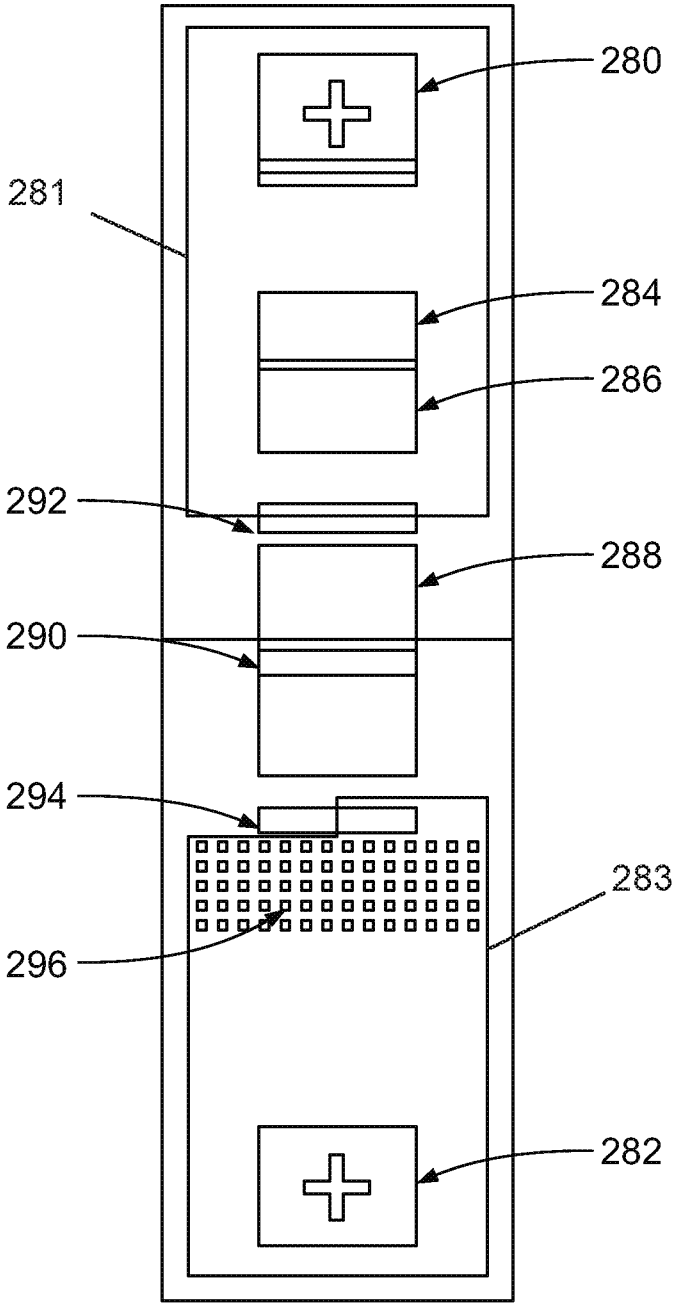

Figure 2D

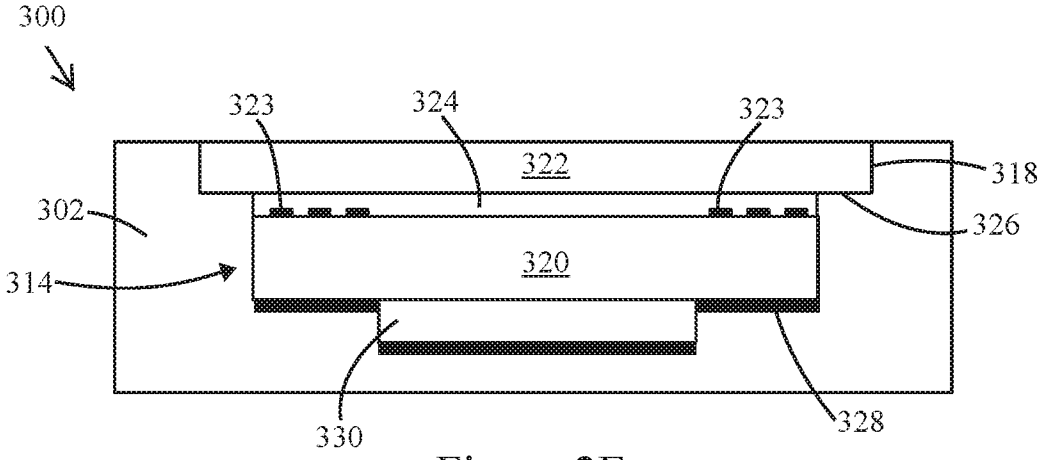

Figure 2E

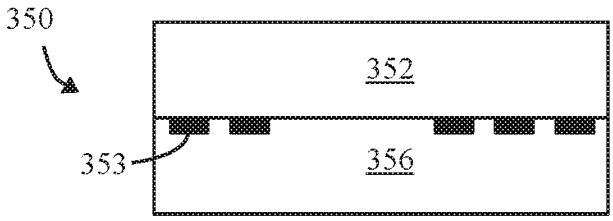

Figure 2F

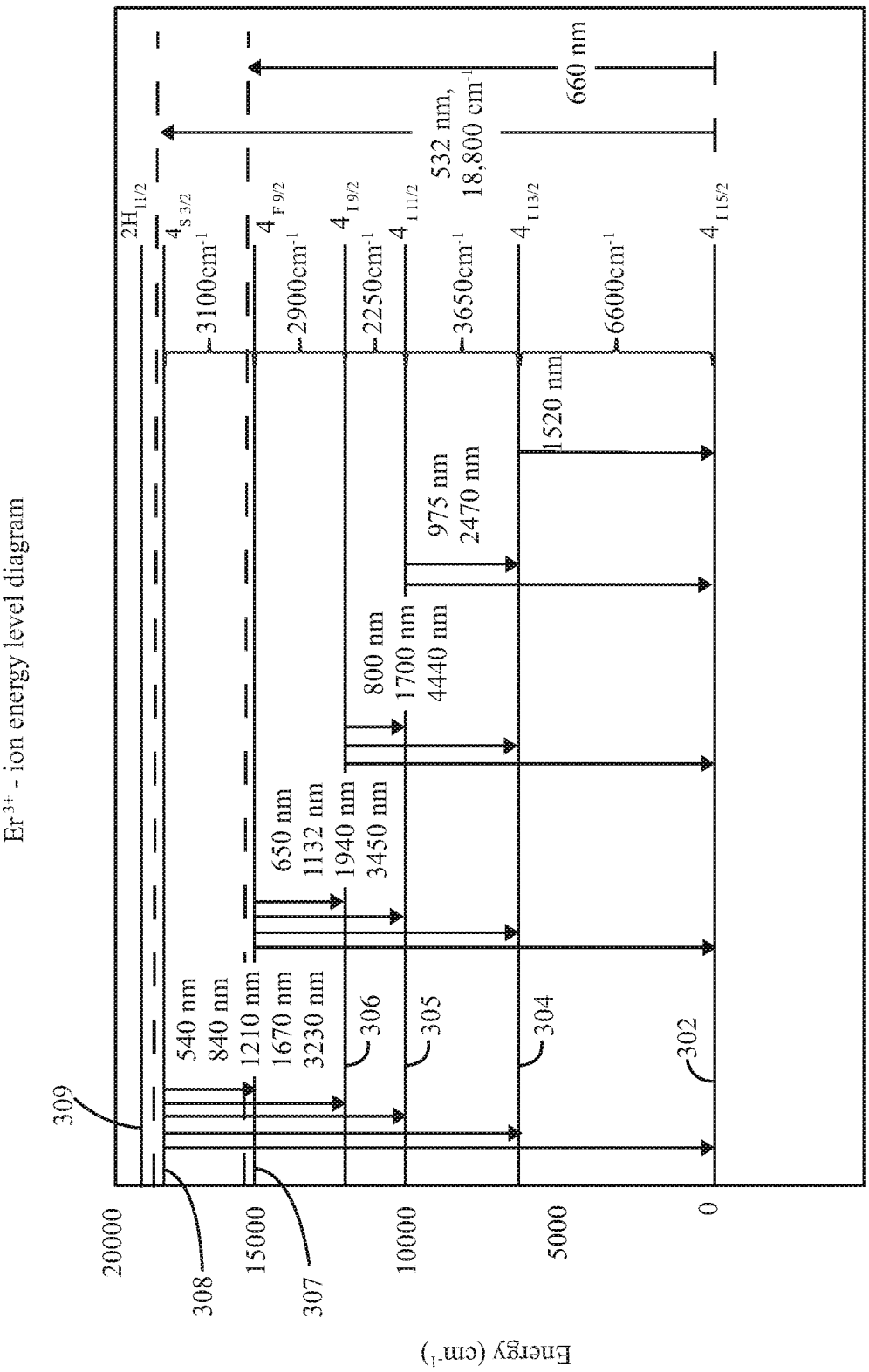
Er 3+ - ion energy level diagram
Energy (cm-1)
20000
15000
10000
5000
0
309
308
307
306
305
304
302
540 nm
840 nm
1210 nm
1670 nm
3230 nm
650 nm
1132 nm
1940 nm
3450 nm
800 nm
1700 nm
4440 nm
975 nm
2470 nm
1520 nm
532 nm,
18,800 cm-1
660 nm
2H11/2
4S 3/2
4F 9/2
4I 9/2
4I 11/2
4I 13/2
4I 15/2
3100cm-1
2900cm-1
2250cm-1
3650cm-1
6600cm-1

Figure 3A

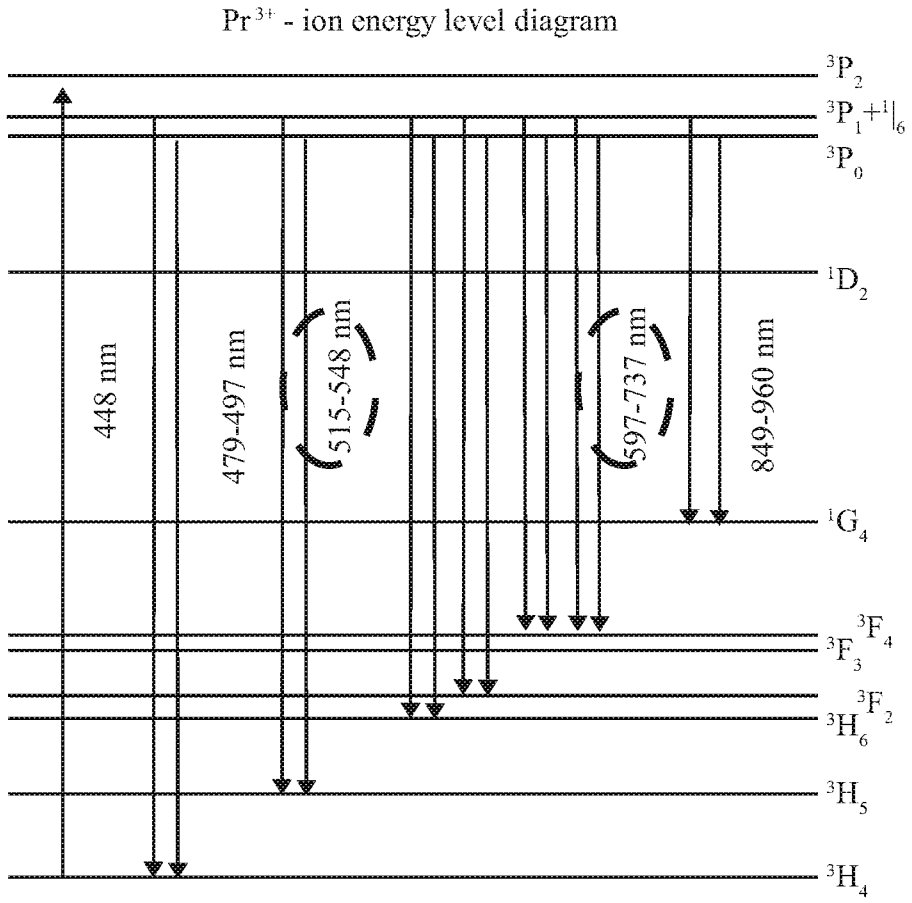
Pr3+ - ion energy level diagram
3P2
3P1+1I6
3P0
1D2
1G4
3F4
3F3
3F2
3H6
3H5
3H4
448 nm
479-497 nm
515-548 nm
597-737 nm
849-960 nm

Figure 3B

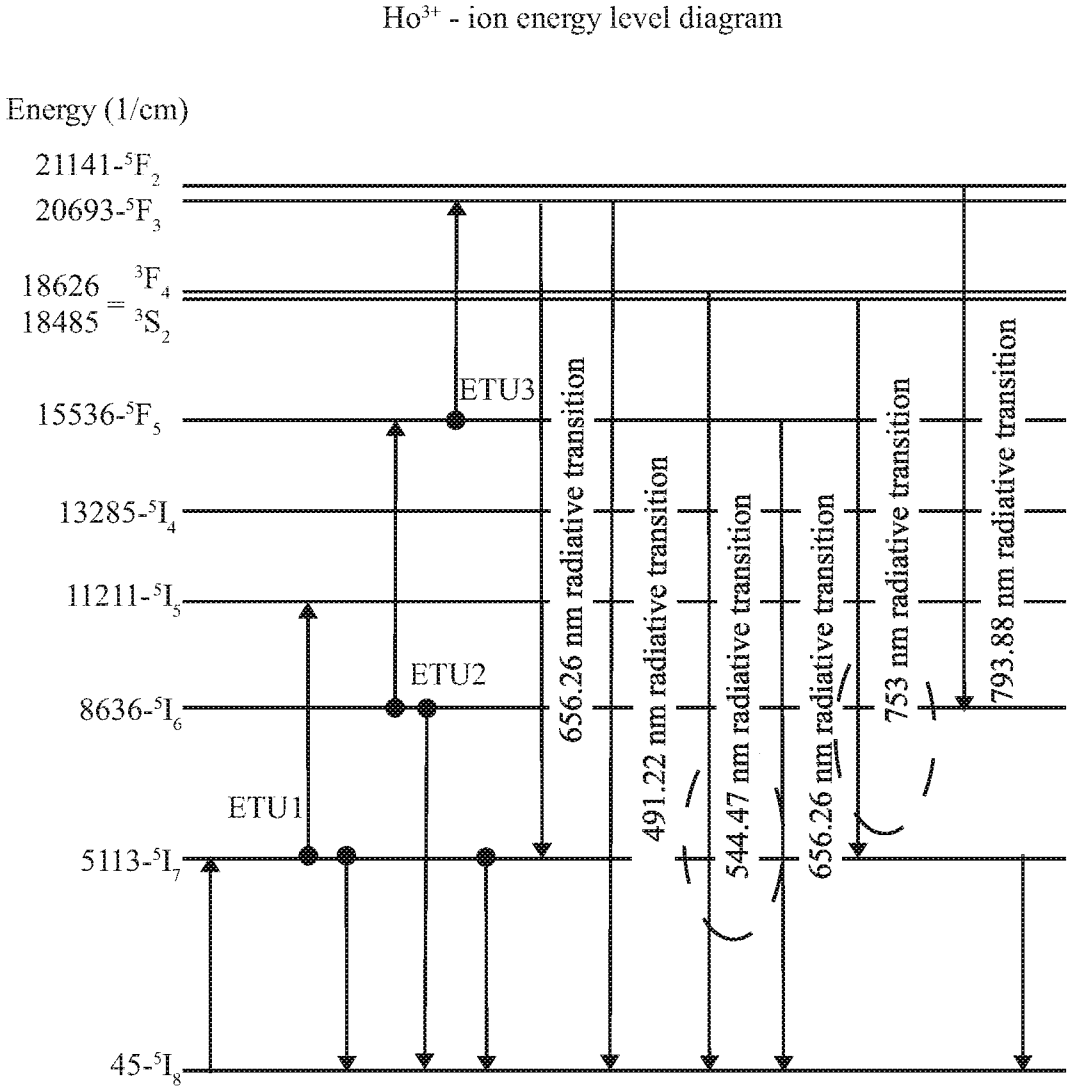
Ho3+ - ion energy level diagram
Energy (1/cm)
21141-5F2
20693-5F3
18626 3F4
18485 3S2
15536-5F5
13285-5I4
11211-5I5
8636-5I6
5113-5I7
45-5I8
ETU1
ETU2
ETU3
656.26 nm radiative transition
491.22 nm radiative transition
544.47 nm radiative transition
656.26 nm radiative transition
753 nm radiative transition
793.88 nm radiative transition

Figure 3C

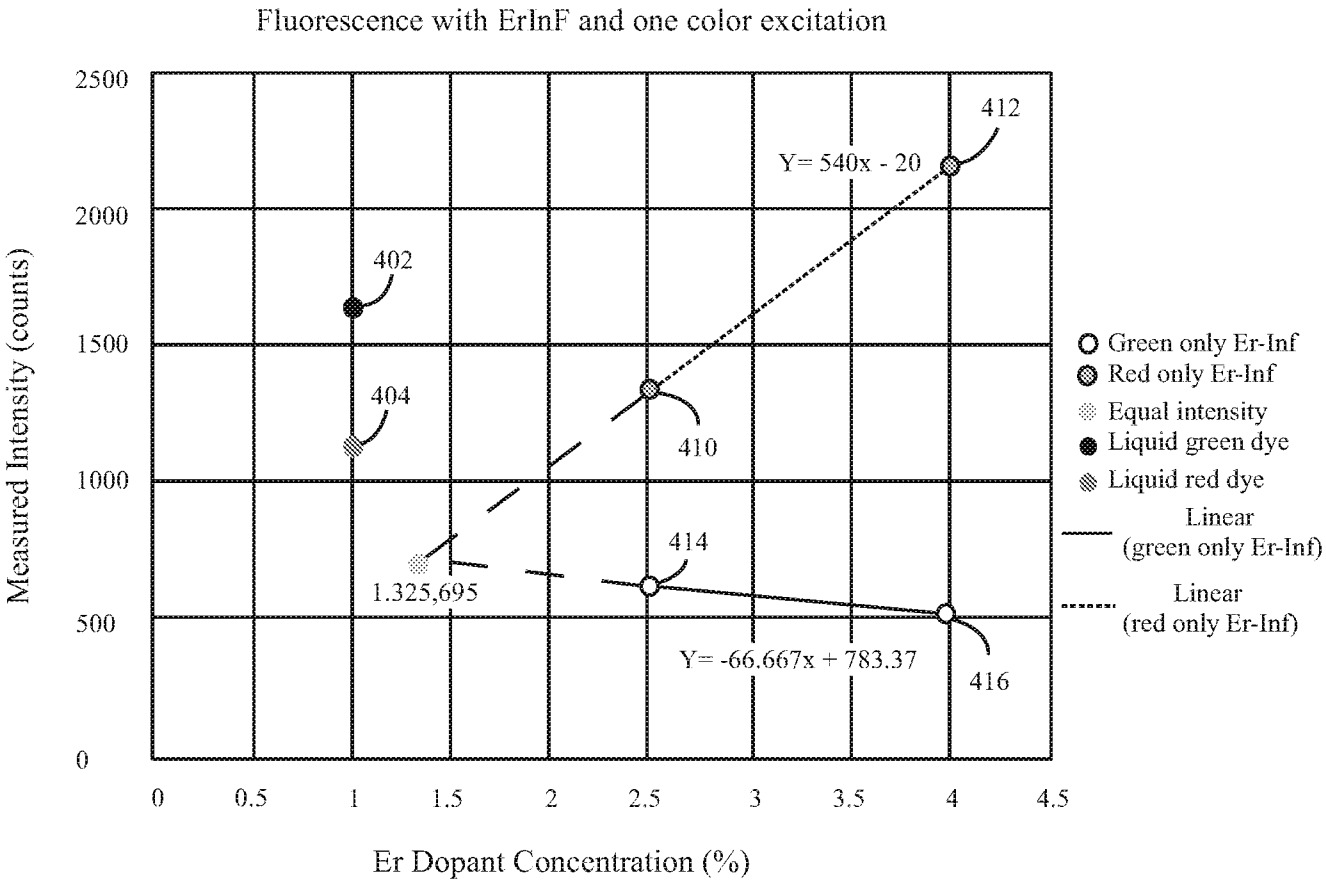

Figure 4

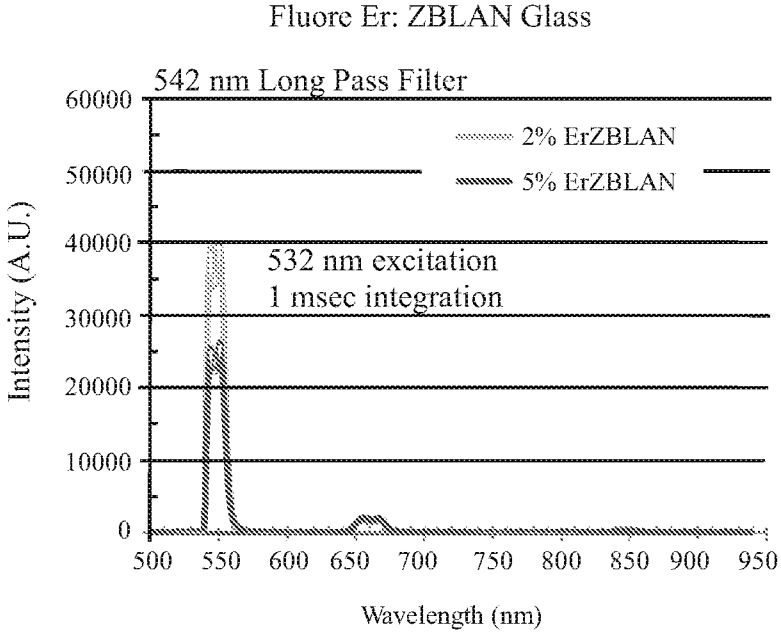

Figure 5

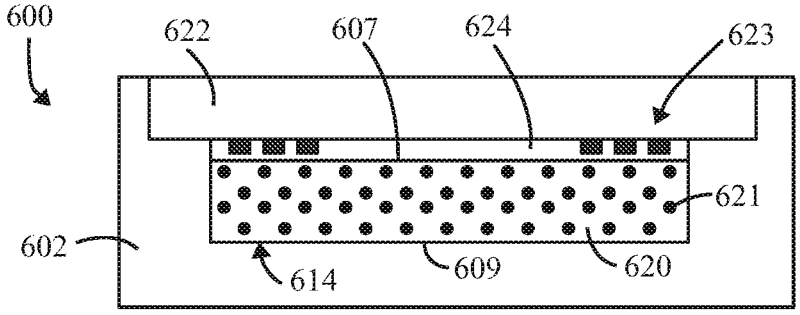

Figure 6A

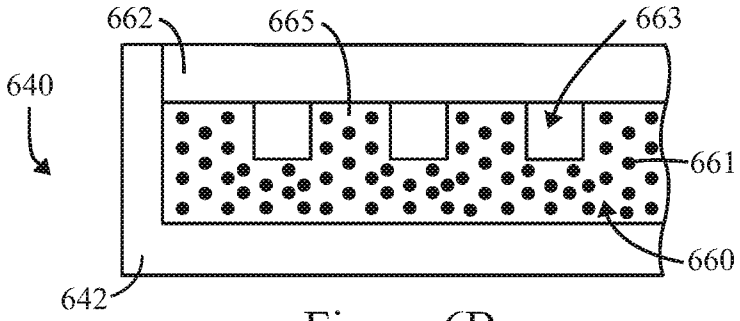

Figure 6B

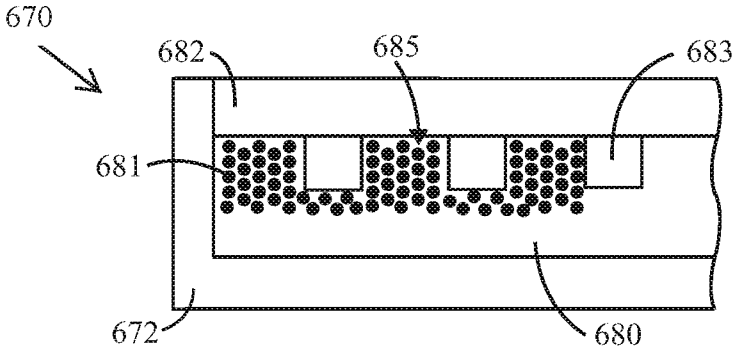

Figure 6C

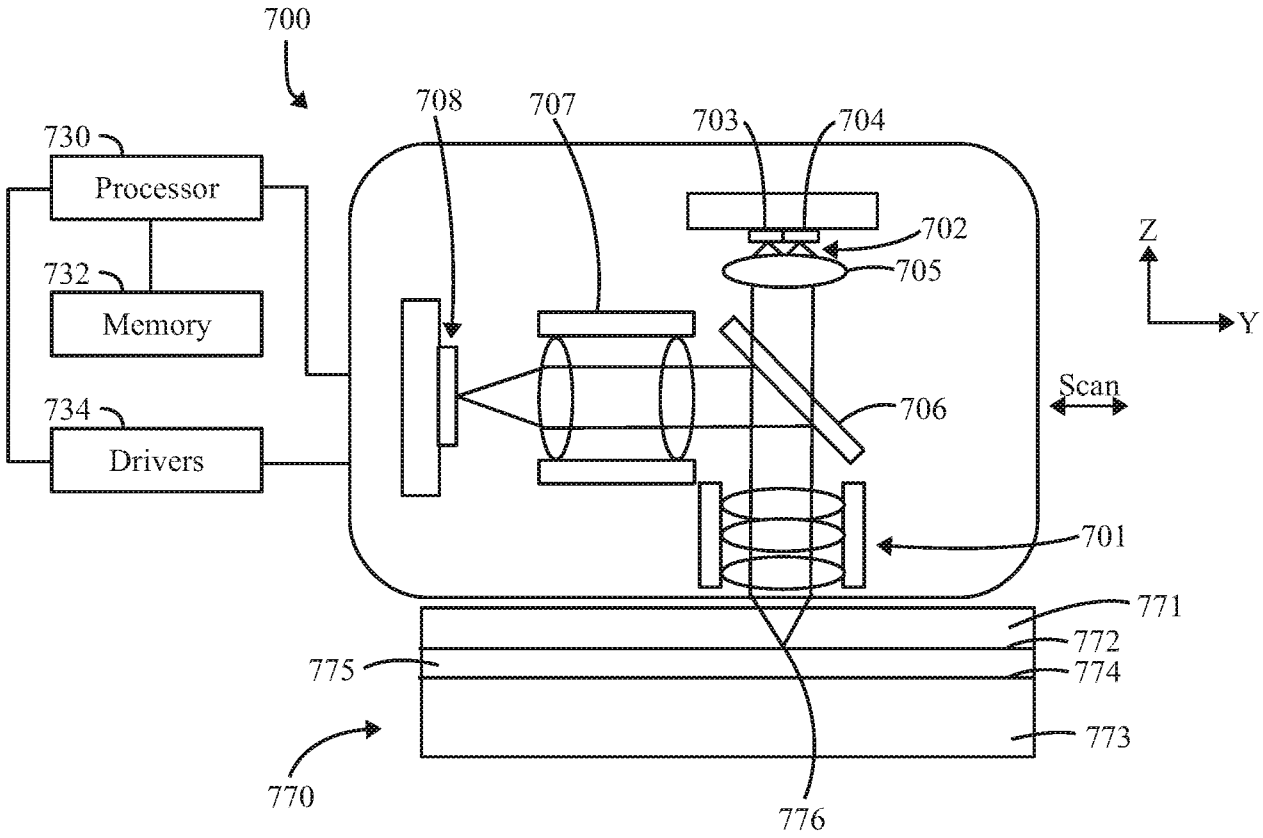

Figure 7

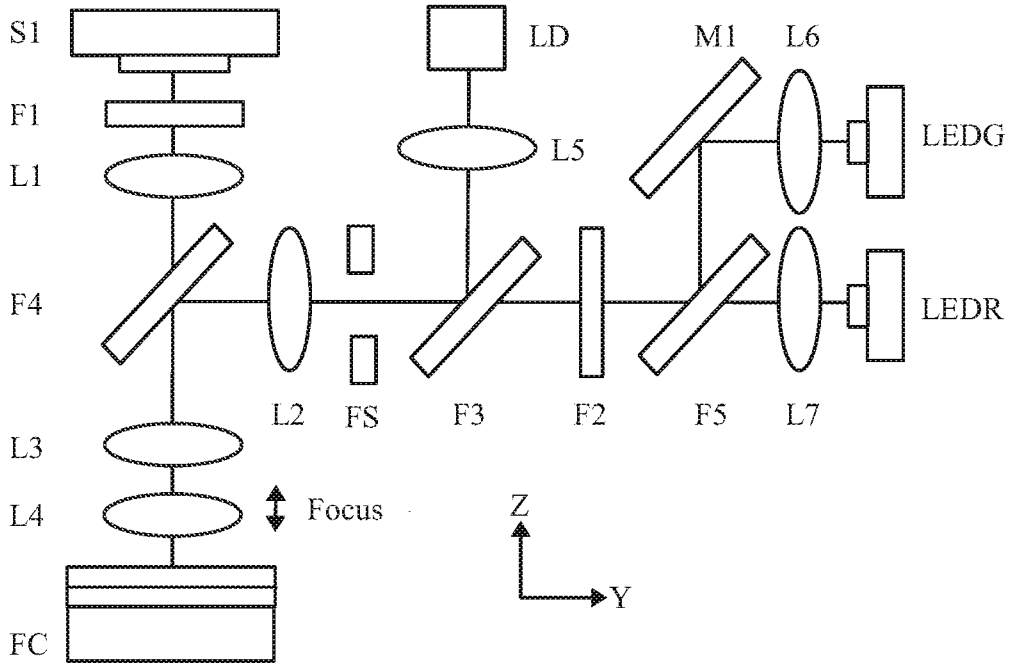

Figure 8

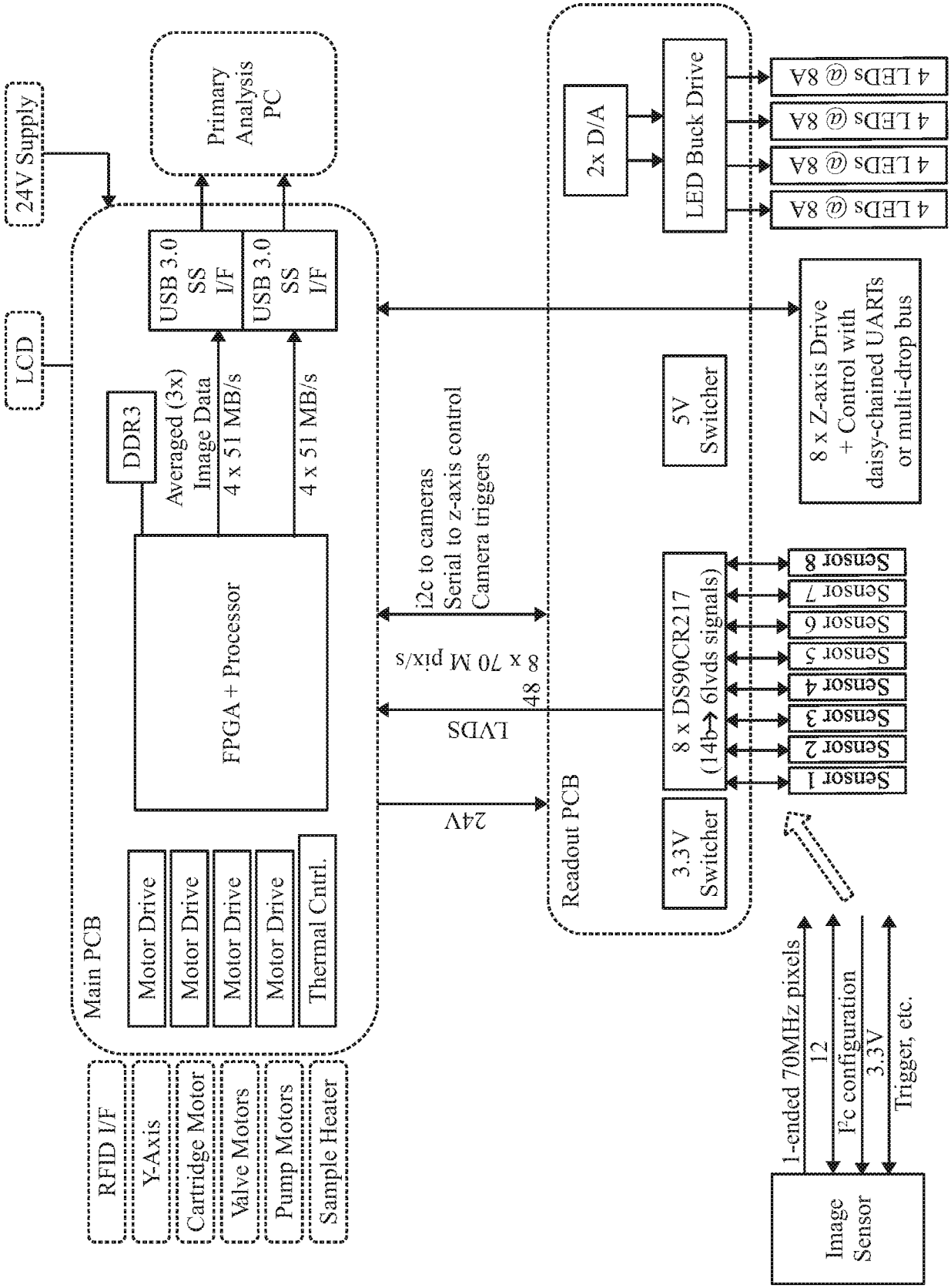
24V Supply
LCD
Primary Analysis PC
USB 3.0 SS I/F
USB 3.0 SS I/F
DDR3
Averaged (3x) Image Data
4 x 51 MB/s
4 x 51 MB/s
FPGA + Processor
Main PCB
Motor Drive
Motor Drive
Motor Drive
Motor Drive
Thermal Cntrl.
RFID I/F
Y-Axis
Cartridge Motor
Valve Motors
Pump Motors
Sample Heater
24V
LVDS
48
8 x 70 M pix/s
i2c to cameras
Serial to z-axis control
Camera triggers
Readout PCB
2x D/A
LED Buck Drive
4 LEDs @ 8A
4 LEDs @ 8A
4 LEDs @ 8A
4 LEDs @ 8A
5V Switcher
3.3V Switcher
8 x Z-axis Drive + Control with daisy-chained UARTs or multi-drop bus
8 x DS90CR217 (14b→ 6lvds signals)
Sensor 1
Sensor 2
Sensor 3
Sensor 4
Sensor 5
Sensor 6
Sensor 7
Sensor 8
1-ended 70MHz pixels
12
I²c configuration
3.3V
Trigger, etc.
Image Sensor

Figure 9

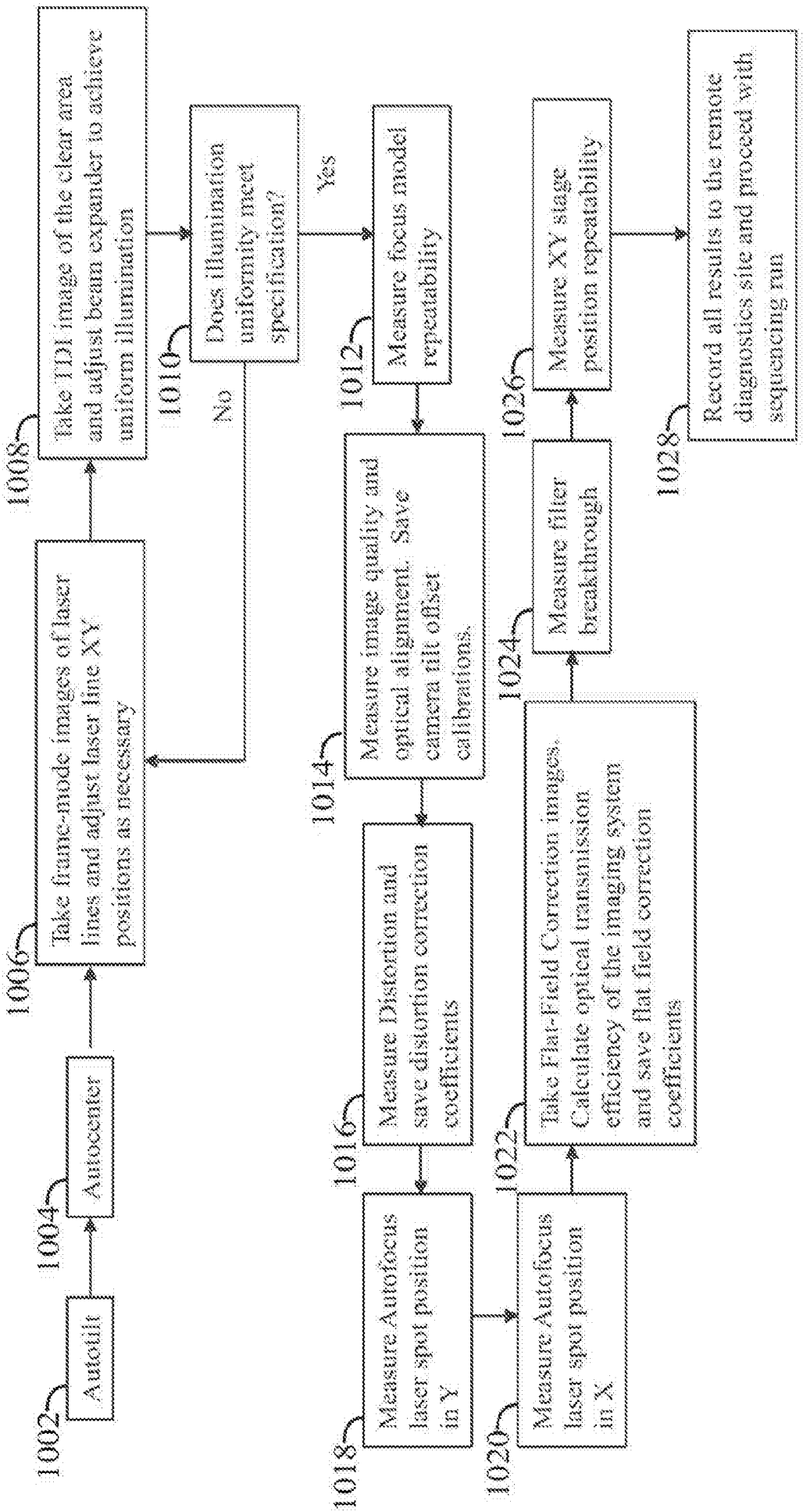
1002
Autofill
1004
Autocenter
1006
Take frame-mode images of laser lines and adjust laser line XY positions as necessary
1008
Take TDI image of the clear area and adjust beam expander to achieve uniform illumination
1010
Does illumination uniformity meet specification?
No
Yes
1012
Measure focus model repeatability
1014
Measure image quality and optical alignment. Save camera tilt offset calibrations.
1016
Measure Distortion and save distortion correction coefficients
1018
Measure Autofocus laser spot position in Y
1020
Measure Autofocus laser spot position in X
1022
Take Flat-Field Correction images. Calculate optical transmission efficiency of the imaging system and save flat field correction coefficients
1024
Measure filter breakthrough
1026
Measure XY stage position repeatability
1028
Record all results to the remote diagnostics site and proceed with sequencing run

Figure 10