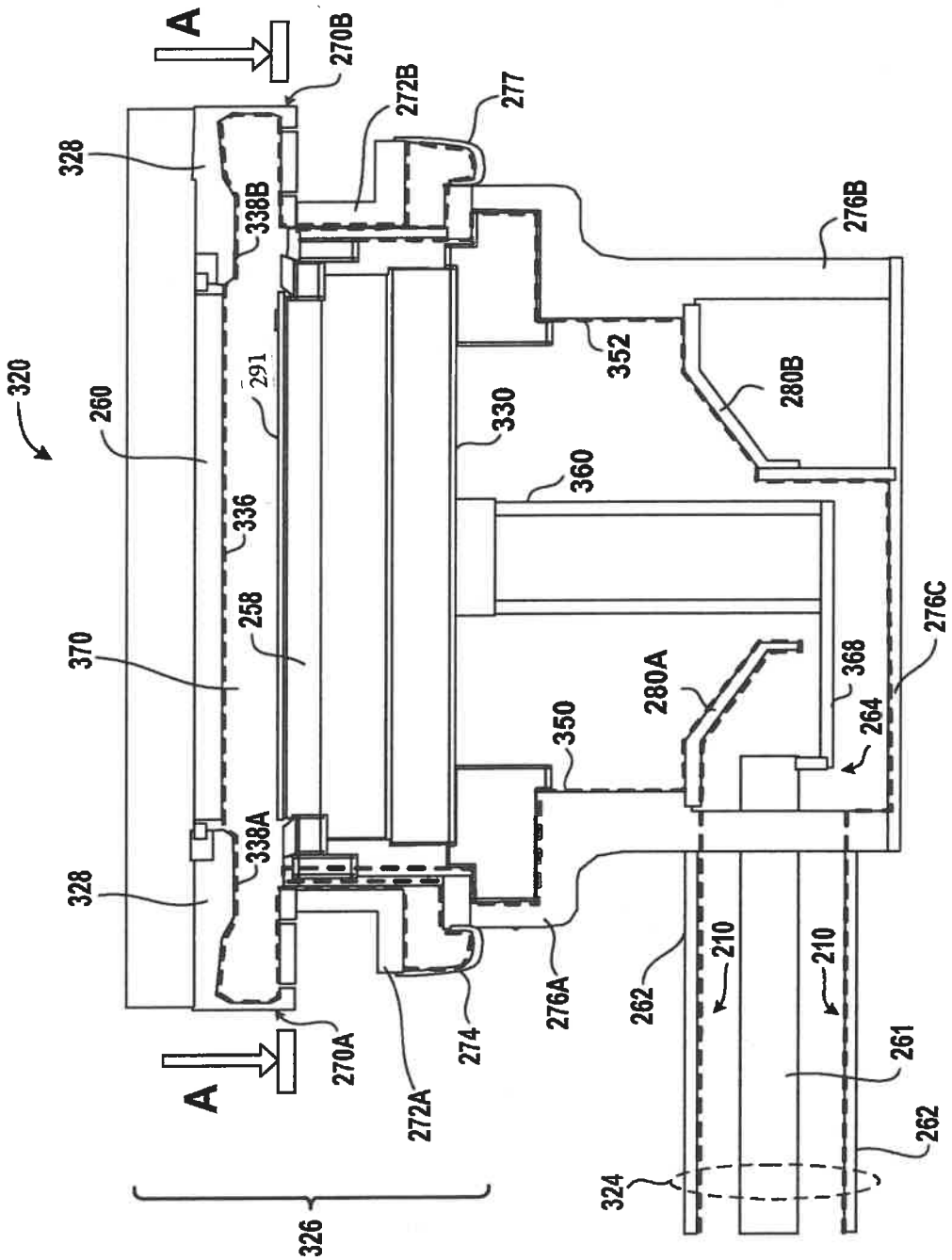
320
A
A
270B
272B
277
328
338B
276B
352
280B
260
291
330
360
336
258
370
276C
368
280A
264
350
338A
328
210
210
262
276A
274
270A
272A
261
262
324
326

FIG. 6

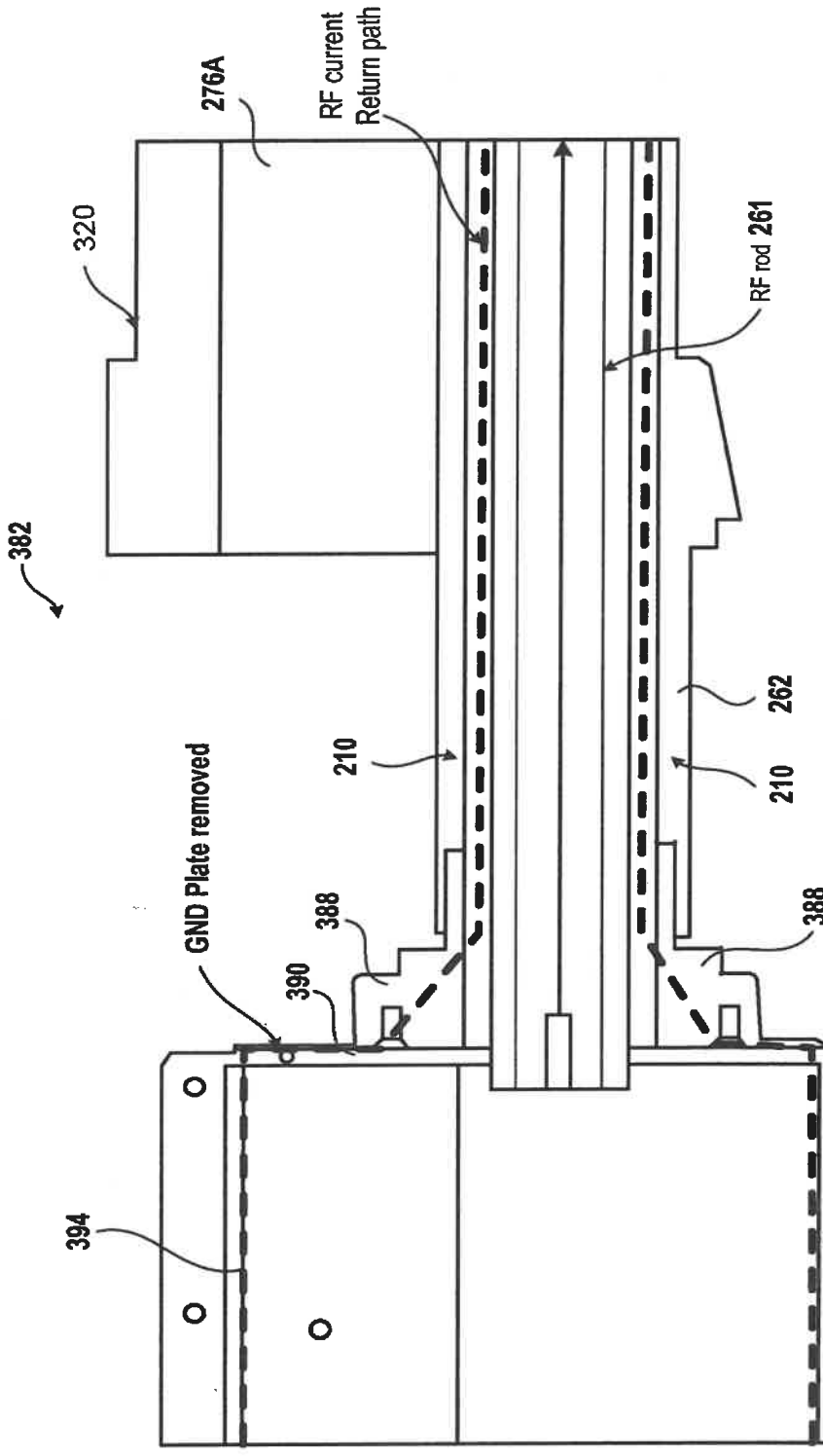
276A
RF current
Return path
320
RF rod 261
382
262
210
210
GND Plate removed
388
388
390
394
384
392

FIG. 7

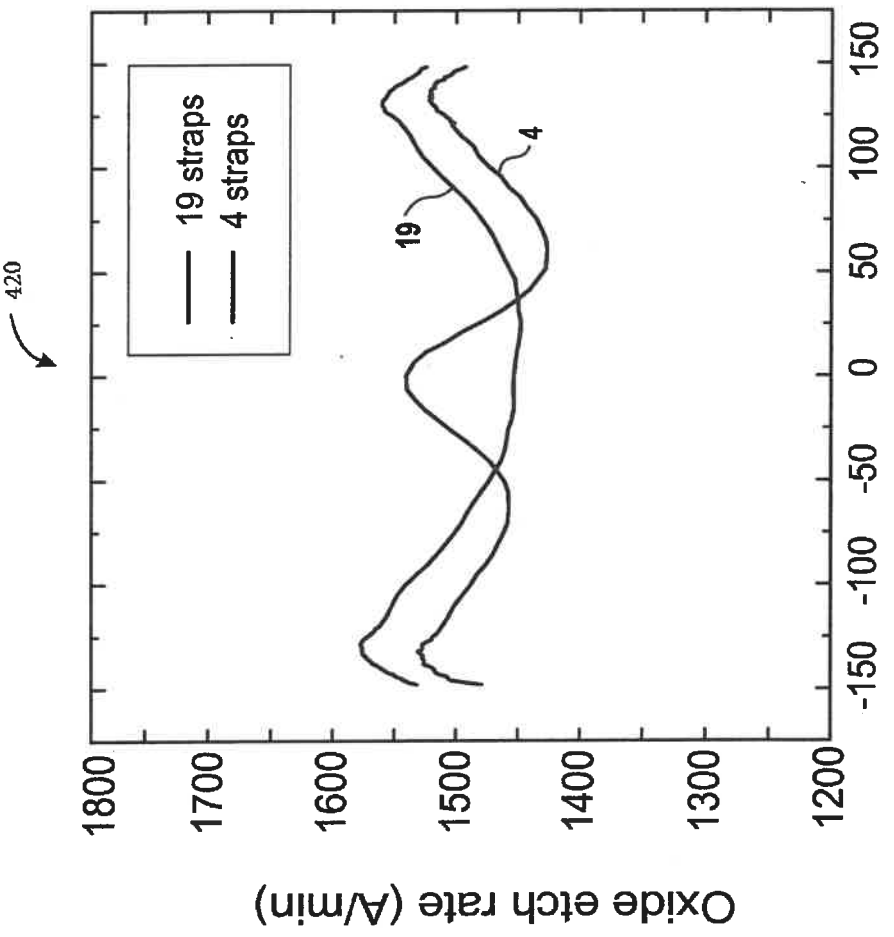
420
19 straps
4 straps
19
4
Oxide etch rate (A/min)
1800
1700
1600
1500
1400
1300
1200
-150
-100
-50
0
50
100
150
Radius (mm)

FIG. 10