HYDRAULIC RAM PUMP

The invention relates to a hydraulic ram pump for converting low amounts of water at high pressure into large amounts of water at low pressure. Such ram pumps are also designated suction rams. Rams denote ram pumps which can be used in reverse for the conversion of large amounts of water at low pressure into low amounts of water at high pressure. The ram pump according to the invention can do both, that is to say it can optionally be used to increase pressure or to increase volume flow.

Suction rams have been known at least since 1905 ("Trägheitsmaschinen als Möglichkeit der hydraulisch-mechanischen Energieumformung" [Inertial machines as an option for hydraulic-mechanical energy conversion], presentation by Ivan Cyphelly, Fegawerk/Switzerland, held at the IHP of RWTH Aachen, Prof. Backé, June 21, 1991). They employ a ram valve which, as in the case of the hydraulic rams having a propulsion water pipe and a natural drop, is abruptly closed by the hydrodynamic pressure drop which is produced by the water flowing through the valve.

In the case of known suction rams (for example German Patent No. 804,288, 1949, or in the case of the suction ram still built today by the company Fegawerk S.A., Le Locie/

Switzerland), when the ram valve closes the kinetic energy of the flowing water in the propulsion water line is dissipated, because the propulsion water is stopped. In order to keep this loss as small as possible, the suction ram from Fegawerk has as the propulsion water line a hose having an extremely large cross section, by which means high velocities of the propulsion water are additionally avoided.

The above-mentioned known suction rams require a specific constant propulsion water volume flow for satisfactory functioning, since when the propulsion water volume flow falls below that needed, the ram pump valve no longer closes and the efficiency falls to zero.

The ram valve is exposed to a particularly high loading as a result of the abrupt stopping of the propulsion water column, this loading being still considerably higher in known suction rams than in conventional hydraulic rams in which, as the result of the stopping of the propulsion water column, the pressure which is backed up at the valve is only that which must be achieved in order to deliver into an air receiver. This high loading on the ram pump valve has an unfavorable effect on the lifetime of the known suction ram.

These disadvantages are overcome by the ram pump described in the German Patent Application DE 19520343, which is not a prior publication (EPC Art. 54(3)), according to which the ram pump valve is not formed as a nonreturn valve,

as in the previously mentioned prior art, which is held open by spring force and closed by the propulsion water flow, but as a valve which is held closed by spring force and opened by the propulsion water pressure. Furthermore, according to the invention, provision is made to actuate the ram pump valve cyclically in the manner of an oscillatory circuit in cooperation with a pressure reservoir element which is likewise acted on by the propulsion water. Because of its construction, this suction ram can operate both to increase pressure and also to increase volume flow.

Since in the case of this ram pump the propulsion water pressure is taken up, before the opening of the ram pump valve, by the pressure-adjustable element of a pressure reservoir element, it is ensured that the propulsion water is not stopped abruptly when the ram pump is operating but rather can be fed to the latter continuously, by which means the ram pump valve is distinctly relieved of load in comparison with the prior art, which is to the benefit of the lifetime of the ram pump as a whole.

By means of the construction of the ram pump valve of this ram pump as a closing valve, and its driving by the propulsion water in conjunction with a pressure reservoir element, it is furthermore achieved that the ram pump valve still opens even at the smallest propulsion water volume flow, since the opening pressure for the ram pump valve is

built up by the pressure reservoir element even given a minimal propulsion water flow. This therefore also achieves a distinct increase in the efficiency of the ram pump in comparison to the suction ram treated above.

Further details of this ram pump are explained in more detail below using Figures 1 and 2 of the drawing, according to which:

Figure 1 shows a schematic representation of a first embodiment, and

Figure 2 shows a second embodiment of the ram pump described in DE 19520343, which is not a prior publication.

The hydraulic ram pump shown in Figures 1 and 2 in general comprises in a conventional way a propulsion water line 1, a delivery water line 2, a ram pump valve 3 and a bottom valve 4 for sucking up delivery water. Located at the end of the delivery water line 2 is the ram outlet 9. The ram pump valve 3 comprises a piston 3a and a restoring or closing spring 3b which biases the piston 3a against a valve seat 6. The ram pump valve 3 is held closed by a spring.

Furthermore, provision is made that the propulsion water line 1 is connected not only as in the prior art to the pressure side of the ram pump valve 3 but additionally to a spring reservoir 5.

The pressure reservoir element 5 is formed as a spring reservoir in the embodiments of the ram pump shown in Figures.

1 and 2.

According to the embodiment shown in Figure 1, the spring reservoir 5 has its own casing 5c, which communicates with the propulsion water line 1 upstream of the ram pump valve 3. Located in the casing 5c is a piston 5a which is biased by a spring 5b and which forms the pressure-adjustable element of the pressure reservoir element.

The piston 3a, the restoring spring 3b and the valve seat of the ram pump valve 3 are likewise accommodated in their own casing 3c, separate from the casing 5c, in the case of the embodiment of the ram pump shown in Figure 1, with the result that the ram pump valve 3 and the spring reservoir 5 are effectively connected to each other only via the propulsion water.

In Figure 2, the elements of the spring reservoir 5 and of the ram pump valve 3 are accommodated in a common casing 10 and coupled mechanically to one another: the piston 5a of the spring reservoir 5 is arranged at the upper end of the coupled piston-spring system, and the pressure reservoir spring 5b connects the piston 5a to the piston 3a, located beneath the latter, of the ram pump valve 3, whose restoring spring 3b runs in the upward direction and is fixed at a stationary abutment 11 in the casing 10. The lower end of the casing dips into the delivery water and is closed by the bottom valve 4.

The propulsion water line opens into the casing 10 at the level of the reservoir spring 5b, while the delivery water line branches off from the casing at the level of the lower end of the closing spring 3b.

The closing spring 3b and the pressure reservoir spring 5b are tension springs in the case of this embodiment of the suction ram of Figure 2.

The ram pump shown in Figures 1 and 2 operates as follows:

The propulsion water flows through the propulsion water line 1 and stresses the pressure reservoir spring 5b via the propulsion water pressure acting on the piston 5a (pressure reservoir phase), until the pressure on the area of the ram pump valve piston 3a, less the area of the valve seat 6, overcomes the force of the restoring or ram pump valve closing spring 3b. The ram pump valve 3 then opens abruptly, since as the opening begins the propulsion water pressure acts on the area of the entire ram pump valve piston 3a. The reservoir spring 5b is now relieved (relief phase), in that it accelerates the mass of water in the delivery line 2 via a reciprocating movement of the piston 5a, as a result of which the pressure in this line falls until the force of the closing spring 3b overcomes the pressure on the entire area of the ram pump valve piston 3a and the ram pump valve closes. In the renewed pressure reservoir phase which now

follows, the water flowing further in the delivery line 2 sucks water out of the bottom valve 4 until the water flow comes to a standstill because of the counterpressure as a result of the delivery head. Further relief and pressure reservoir phases then proceed cyclically.

The ram pump shown in Figure 2 runs cyclically through pressure reservoir and relief phases, like the ram pump shown in Figure 1. In contrast to the ram pump shown in Figure 1, in the case of the ram pump of Figure 2 the pressure reservoir piston 5a, because of its spring coupling to the ram pump valve piston 3a, partially takes over the changeover function of the latter. This means that the propulsion water stresses the pressure reservoir spring 5b via the propulsion water pressure acting on the piston 5a (pressure reservoir phase) until the pressure on its area, less the area of the valve seat 6, overcomes the force of the restoring or ram pump valve closing spring 3b. The ram pump valve 3 then opens abruptly, since as the opening begins the propulsion water pressure acts on the area of the entire pressure reservoir piston 5a. The pressure reservoir spring 5b is now relieved (relief phase), in that it accelerates the mass of water in the delivery line 2 via a reciprocating movement of the piston 5a, as a result of which the pressure in this line falls until the force of the closing spring 3b overcomes the pressure on the entire area of the pressure reservoir piston

3a and the ram pump valve closes. In the renewed pressure reservoir phase which now follows, the water flowing further in the delivery line 2 sucks water out of the bottom valve 4 until the water flow comes to a standstill because of the counterpressure as a result of the delivery head. Further relief and pressure reservoir phases then proceed cyclically.

In Figure 2, there is additionally arranged in a free space of the casing 10 above the piston 3b an air-filled hose 8, which buffers the pulsating movements of the ram pump valve piston 3b and of the water in the delivery line 2, by which means a relatively quiet mass flow is ensured at the ram pump outlet 9. Other known means for buffering can in principle also be used.

The object of the present invention is to provide a hydraulic ram pump which, given a compact construction, ensures a high efficiency and a long lifetime, and can be operated both to increase pressure and to increase volume flow.

This object is achieved by means of the features of claim 1. Advantageous developments of the invention are specified in the subclaims.

Accordingly, the hydraulic ram pump according to the invention is in principle constructed as shown in Figures 1 and 2 and explained above. A special feature of the ram pump according to the invention consists in a mechanical coupling

of the valve seat of the ram pump valve to the valve seat of the bottom valve in such a way that the kinetic energy which arises when closing one valve is transmitted to the other valve for the purpose of opening its valve member. In addition to the advantages already treated above of a ram pump of this type, this achieves more favorable operation in terms of energy. A further advantage is that the detrimental section between the two valves, which represents a problem in the prior art, since the kinetic energy of the water in this connecting section cannot be utilized and, when the ram pump closes, can lead to cavitation in the latter, can be kept optimally short. Finally, a compact construction of the ram pump is ensured by the fact that the ram pump valve and the bottom valve are arranged directly adjacent to each other and axially.

The compact construction benefits from a design of the pressure reservoir in the shape of a bellows which carries the valve member of the ram pump valve at one end. Likewise beneficial to the compact construction is the arrangement of the restoring spring for the valve member of the ram pump valve inside the pressure reservoir bellows. Finally, according to the invention the compact construction benefits from the formation of the restoring spring for the bottom valve in the shape of a bellows which is arranged in the pump in such a way that the delivery water passes through it.

The invention is explained in more detail below by way of example using Figure 3 of the drawing; this shows a longitudinal sectional view through a preferred embodiment of the ram pump according to the invention. Parts which are functionally identical to those in Figures 1 and 2 are designated in Figure 3 by the same reference numbers.

The ram pump shown in Figure 3 has a generally tubular casing 20 having a cylindrical jacket 21 which is closed at one end, the lower end in Figure 3, by a bottom 22 and which is closed at its other end, the upper end in Figure 3, by a lid 23. The interior of the tubular casing 20 is subdivided axially by a partition 24 into a larger-volume subchamber 25 and a smaller-volume subchamber 26.

The bottom 22 of the casing 20 is designed in two parts in the embodiment shown and comprises a ring 27 whose outer circumference corresponds to the outer circumference of the jacket 21, and whose acentric inner circumference has an internal thread into which a closure stopper 28 with an external thread is screwed. In order to seal off the parts 27 and 28 in relation to each other, there is designed at the outer circumference of the closure stopper 28 an annular groove in which there is seated an O ring 29 which is supported on the inner circumference of the ring 27.

A propulsion water line, not shown, is connected to an inlet pipe 30 which passes through a hole in the lid 23 and a

corresponding hole in the partition 24. The inlet pipe 30 is tightly connected at least to the partition 24. Inserted tightly into a further hole in the partition 24 is a tubular valve seat carrier 31 which has an annular part 4a projecting into the smaller subchamber 26, said annular part 4a forming with its outside pointing toward the lid 23 a valve seat 4b of the bottom valve 4, which in addition has a restoring spring 4c which is formed as a bellows, to one end of which the valve member 4b is firmly connected and the other end of which is firmly connected to a pipe connection 32 which passes through a hole in the lid 23, is firmly connected to the latter and is connected to a delivery line, not shown. Formed at the other end of the valve seat carrier 31 is a valve seat 6 in the shape of a conical surface which tapers in the direction of the valve seat 4a of the bottom valve 4 and, for the purpose of cooperation, cooperates with a spherical surface, complementary thereto, formed on the valve member 3a of the ram pump valve 3, which is likewise formed in the shape of a circular disk which is firmly connected to one end, the upper end in Figure 3, of a bellows 5 which, as explained below, forms the pressure reservoir of the ram pump and is firmly connected with the other end to the inner surface of the closure stopper 28 in the bottom of the casing 20. Supported on the inside of the annular ram pump valve member 3 is a restoring spring 3b, whose other end is

supported at the upper end of a supporting pipe 33 which is inserted with its other end in a hole in the closure stopper 28 and is firmly connected to the latter. At the lower end, the supporting pipe 33 is penetrated radially by holes 34 which, on the one hand, open into the interior of the pipe 33 and, on the other hand, open into the inner space enclosed by the bellows 5.

The valve body 3a of the ram pump valve 3 has a central hole which is penetrated by a cylindrical body 35 which, with its end pointing toward the bottom valve 4, projects into the inner space enclosed by the valve seat carrier 31 and is broadened at the other end in the manner of a flange, this flange-like end part serving for fastening the valve body 3 to the bellows 5. On that side of the flange pointing toward the bellows 5 there is formed a retaining body for the restoring spring 3b, this spring engaging around said retaining body. This body, as well as the flange end of the cylindrical body 35 and the latter itself, are completely penetrated by a capillary bore which finds its extension in a capillary tube 36 which extends as far as into the bottom region of the retaining pipe 33.

The jacket of the casing 20 is preferably pierced at a plurality of locations in the region of the smaller subchamber 26, and metal screens 37 and 38 are seated in these piercings.

As is shown schematically in Figure 3 by a wavy line at the upper end of the ram pump, the latter is immersed below the surface of a water reservoir.

The mode of operation of the ram pump according to the invention, which is constructed as explained above using Figure 3, is explained below.

Propulsion water is pumped by an external pump (not shown), via the connecting nozzle 30, into the lower sub-chamber or pressure chamber 1 of the ram pump. Since the valve member 3 is held by the restoring spring 3b in the closed position against the valve seat 6 of the ram pump valve 3, the pressure in the pressure chamber outside the bellows 5 rises, and this rising pressure leads to an elastic deformation of the bellows 5, which preferably consists of metal. This means that the folds of the bellows 5 fulfill the function of a spring reservoir for the hydraulic suction ram.

The liquid pressure building up in the subchamber 25 effects an increasing force on the end face of the bellows 5 carrying the ram pump valve member 3a, and this pressure finally overcomes the closing force of the restoring spring 3b. As a result, the ram pump valve 3 opens, or its valve member 3a comes free of its valve seat, and the liquid pressure which is present in the pressure chamber 25 now acts on the entire end face of the bellows 5 and, respectively, the outer face of the valve member 3a, as a result of which

the ram pump valve 3 opens still further, and as a result of which the pressure in the subspace 25 falls slightly. In addition, with the ram pump valve 3 open, the pressure in the subchamber 25 acts on the inner space of the bellows 4c, which forms the restoring spring for the bottom valve 4, which is still closed at this time, and the delivery water which is present in this inner space, and accelerates the latter, as a result of which the pressure falls further until it falls below that value at which the restoring spring 3b presses the valve body 3 once more against its valve seat and thereby closes the ram pump valve, the pressure in the subchamber 25 being built up once more.

The kinetic energy which is transmitted to the associated valve seat 6 by the closure of the ram pump valve 3 is transmitted via the valve seat carrier 31 to the valve seat 4a of the bottom valve 4, and opens this valve as a result of this elastic shock. At the same time, the kinetic energy entrained in the delivery water is used up, in that the delivery water sucks water from the surroundings against the weight of the delivery water through the bottom valve 4, which is now open, the valve body 4b being lifted off the valve seat 4a. At the same time, the bottom valve 4 is held open by a slight negative pressure in the bellows 4c. As soon as the energy contained in the delivery water has been used up, the bottom valve 4 is closed once more by the spring

force resident in the bellows 4c.

The kinetic energy of this closing process is transmitted by an elastic shock via the valve seat carrier 31 to the valve seat 6 of the ram pump valve 3 and by the latter to the valve member 3a of the ram pump valve 3, as a result of which the latter is opened. At the same time, the delivery water which has just remained stationary swings back slightly because of the elasticity of the bellows 4c and produces a small setting shock which promotes the opening of the ram pump valve.

Because of the valve seats, which according to the invention are mechanically coupled or formed in one piece, for the bottom valve 4 and the ram pump valve 3, the closing energy of the respective valve is advantageously employed to open the respective other valve. This advantage cannot be achieved in the case of ram pumps of conventional construction, since the valve seats of the two valves under discussion (the bottom valve is a nonreturn valve) are designed to be separate from one another, so that kinetic energy cannot be transmitted from one valve to the other. The kinetic energy which is released during the closure is rather dissipated by means of damping, for example in the sealing rubber of the valve. Damping of this type is conventionally also necessary in order to prevent the so-called bouncing of the respective valve member on the valve seat. In the case of

valves which are designed according to the invention, connected to each other via the valve seat or formed as a material unit, this bouncing does not occur, since the kinetic energy is introduced by the closing valve into the other valve, in order to trigger or to promote its opening.

Conventionally, the flow round a valve member is axial, and the flow runs apart radially between the valve member and the valve seat following the inflow. By contrast with this, the flow in the valves which are designed according to the invention with a common valve seat runs radially inwardly together between the valve members and the associated seats and then axially away from the respective valve. It is only this that provides the capability of a common valve seat. A further advantage of the coupling of the valve seats of the two valves, according to the invention, consists in the fact that the section between the two valves can be kept negligibly short.

By means of a simple measure, the ram pump according to the invention and explained above can also be operated as a normal ram. For this purpose it is merely necessary to provide an additional spring which has the effect that the bottom valve 4 is open in the rest position. The mode of operation of this modified ram pump is as follows:

Initially, the delivery water is accelerated because of its natural fall, and it emerges into the open through the

opened bottom valve 4 via the tube connection 32 until a hydrodynamic negative pressure between the valve member 4b and the valve seat 4a and a backpressure in the bellows 4c effect the closure of the bottom valve 4. As a result, the ram pump valve 3 opens, and the kinetic energy of the delivery water charges the spring reservoir (bellows 5), as a result of which the ram pump valve 3 closes once more and the process, as explained above, begins again from the beginning. However, if the spring reservoir (bellows 5) is already charged (that is to say no water under pressure is consumed), the bottom valve 4 does not close when the delivery water has come to a standstill but only after the excess energy from the spring reservoir has accelerated the delivery water in the converse manner or backward. Following the closure of the ram pump valve 3, the delivery water then initially sucks water in through the bottom valve 4, until the flow direction reverses. This means that, if no water under pressure is needed, the consumption of delivery water also returns to a minimum.

The purpose of the capillary tube 36 or the capillary opening in the valve member (Figure 3) is that the pressure in the interior of the bellows 5 becomes equal to the average pressure in the bellows 4c and in the delivery line. This achieves the situation where the pressure difference between propulsion water and delivery water, at which the ram pump

valve opens, is independent of the delivery head. And as a result the load on the external propulsion water pump is always the same, irrespective of whether the ram pump is employed to deliver large quantities of surface water or small quantities of water from a great depth.

THIS SHEET HAS BEEN REPLACED

1. A hydraulic ram pump, comprising:

a propulsion water line fed with propulsion water (at 30), a delivery line (at 32) which can be connected to delivery water via a bottom valve (4), a ram pump valve (3) which is connected to the propulsion water line (1) and delivery line (2), the propulsion water flowing into the delivery line when the ram pump valve (3) is open and, after the closing of the ram pump valve, the water column flowing further in the delivery line sucking in delivery water via the bottom valve (4), the ram pump valve (3) being held by spring force in its closed position separating the propulsion water line from the delivery line, and a pressure reservoir (5) being provided, which is connected to the propulsion water line upstream of the ram pump valve (3) in the direction of flow, the valve member (4a) being of annular design, axially movable and tightly connected to the delivery line, the effective cross section of this connection being larger than the cross section of the valve seat, and the valve seat (6) of the ram pump valve (3) and the valve seat (4a) of the bottom valve being mechanically coupled in order to transmit kinetic energy.

2. The hydraulic ram pump as claimed in claim 1, wherein the ram pump valve (3) and the bottom valve (4) are

* C L M S *

essentially arranged coaxially, with mutually adjacent valve seats.

3. The hydraulic ram pump as claimed in claim 2, wherein the two valve seats (4a, 6) are formed at the opposite ends of a valve seat carrier (24).

4. The hydraulic ram pump as claimed in one of claims 1 to 3, wherein the pressure reservoir (5) has a bellows which is supported at one end in a subchamber (25) of a two-part casing and is acted on externally by the propulsion water, which is conducted into this subchamber (25) via the propulsion water line (30), and which carries at the other end the valve member (3a) of the ram pump valve (3), the valve seat (6) of which is seated in a partition (24) subdividing the casing (20) and is connected to the valve seat (4a) of the bottom valve (4), and which is arranged in the other subchamber, which communicates with the delivery water.

5. The hydraulic ram pump as claimed in claim 4, wherein the bellows (5) serves as an elastic, variable-volume component of the pressure reservoir, without changing its axial extent in order to store pressure.

6. The hydraulic ram pump as claimed in claim 4, wherein a restoring spring (3b) for the ram pump valve (3) is arranged in the interior of the pressure reservoir bellows (5), runs coaxially with the latter and is supported with one

* C L M S *

end on the inside of the valve member (6) of the ram pump valve (3) and with its other end on the casing (2).

7. The hydraulic ram pump as claimed in claim 4 or 5, wherein the valve member (3a) of the ram pump valve (3) is penetrated by a capillary bore which connects the interior of the pressure reservoir bellows (5) to the space between the valve member (4a) of the bottom valve (4) and the valve member (6) of the ram pump valve (3).

8. The hydraulic ram pump as claimed in claim 6, wherein a capillary tube (36), which extends as far as into the bottom region of the pressure reservoir bellows (5), is connected to the capillary bore.

9. The hydraulic ram pump as claimed in one of claims 4 to 7, wherein the bottom valve (4) has a bellows (4c) which at its one end carries the valve member (4a) of the bottom valve (4), and at its other end is supported on the casing (20) in such a way that this valve member (4b) is forced against its valve seat (4a) in the closed position.

* C L M S *

FIG.1

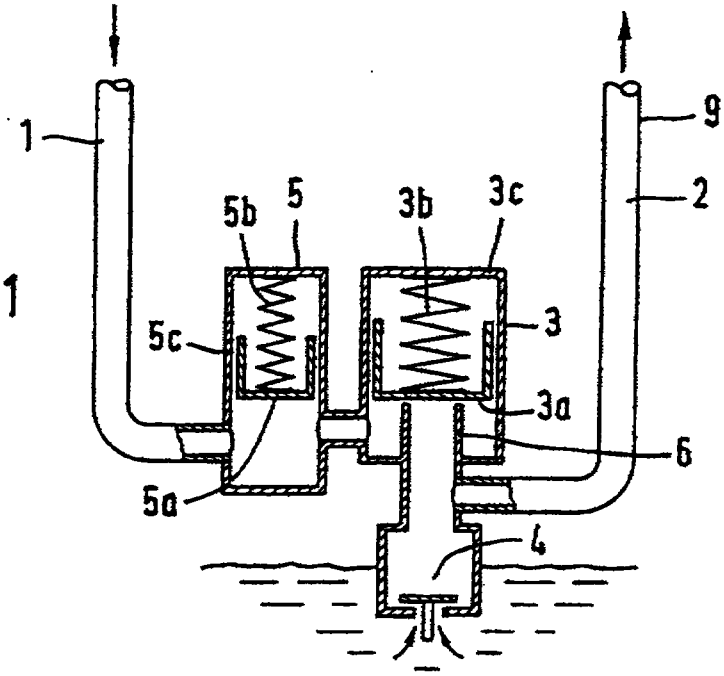

FIG.2

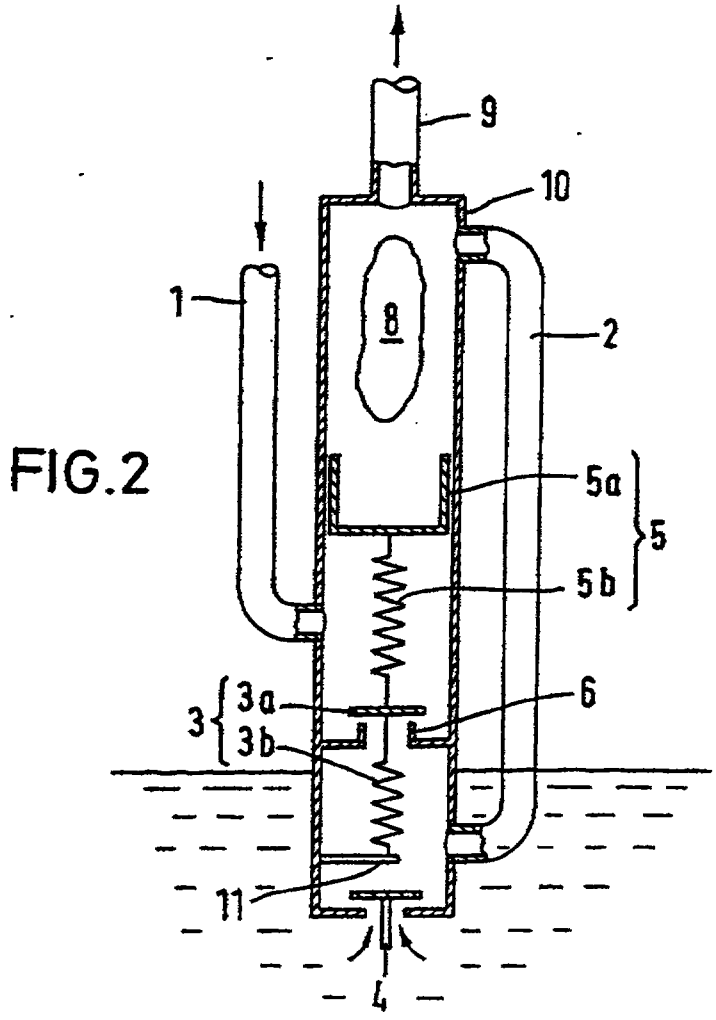

Fig. 3

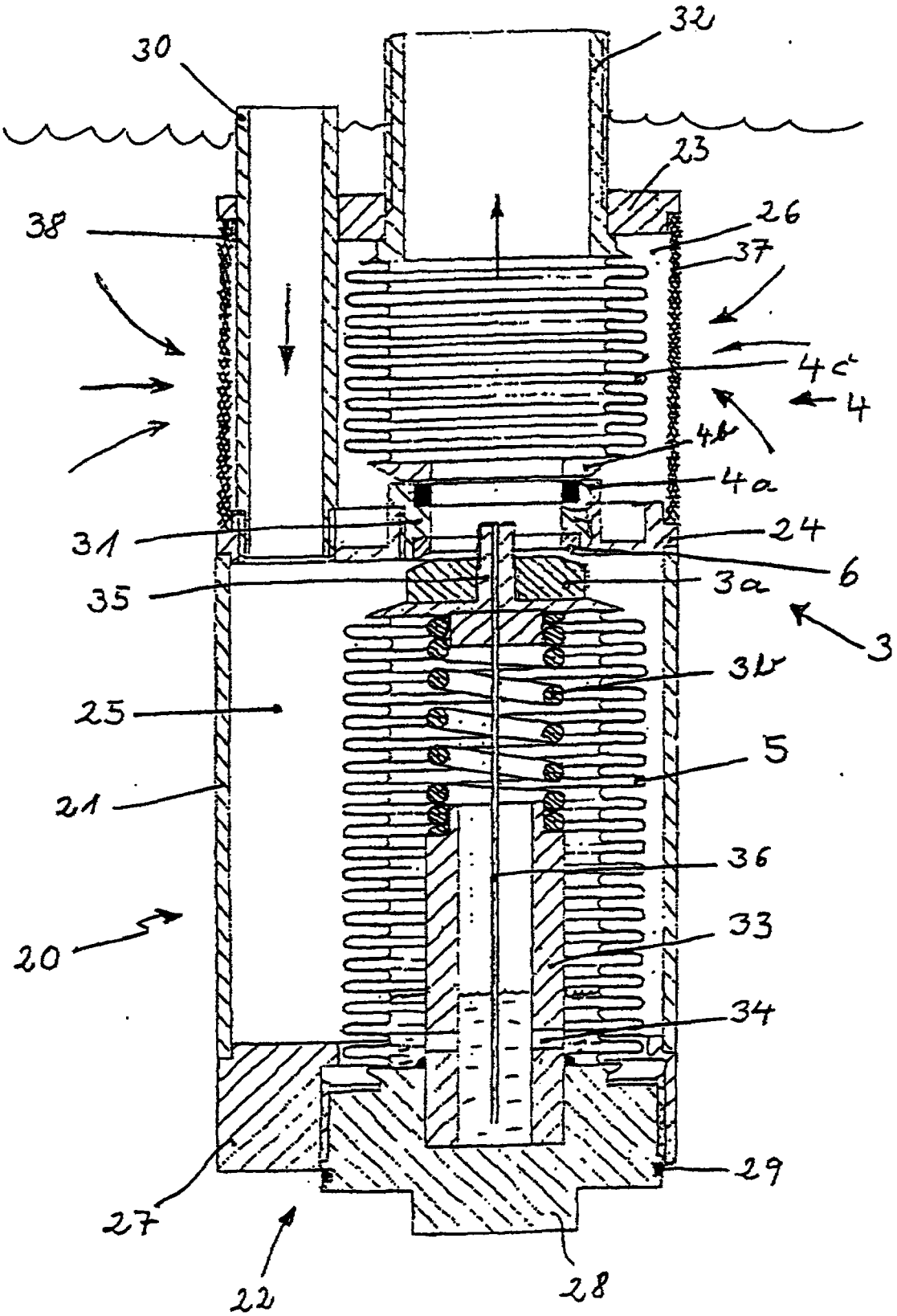
30
32
23
38
26
37
4c
4
4b
4a
31
24
6
35
3a
3
3b
25
5
21
36
20
33
34
29
27
22
28

app. no.: PCT/EP97/01908

our ref.: T 10012 WO

New Claims

1. A hydraulic ram pump, comprising:
a propulsion water line fed with propulsion water (at 30), a delivery line (at 32) which can be connected to delivery water via a bottom valve (4), a ram pump valve (3) which is connected to the propulsion water line (1) and delivery line (2), the propulsion water flowing into the delivery line when the ram pump valve (3) is open and, after the closing of the ram pump valve, the water column flowing further in the delivery line sucking in delivery water via the bottom valve (4), the ram pump valve (3) being held by spring force in its closed position separating the propulsion water line from the delivery line, and a pressure reservoir (5) being provided, which is connected to the propulsion water line upstream of the ram pump valve (3) in the direction of flow, a valve body (4b) of the bottom valve (4) being of annular design, axially movable and tightly connected to the delivery line, characterized in that the effective cross section of this connection is larger than the cross section of the valve seat (4a) of the bottom valve (4), and the valve seat (6) of the ram pump valve (3) and the valve seat (4a) of the bottom valve (4) are mechanically coupled in order to transmit kinetic energy.

2. The hydraulic ram pump as claimed in claim 1, wherein the ram pump valve (3) and the bottom valve (4) are

* C L M S *

AMENDED SHEET

9804599-0
IPOR COPY

PCT WORLD INTELLECTUAL PROPERTY ORGANIZATION
International Bureau

INTERNATIONAL APPLICATION PUBLISHED UNDER THE PATENT COOPERATION TREATY (PCT)

(51) International Patent Classification 6 : F04F 7/02 — A1

(11) International Publication Number: WO 97/40277

(43) International Publication Date: 30 October 1997 (30.10.97)

(21) International Application Number: PCT/EP97/01908

(22) International Filing Date: 16 April 1997 (16.04.97)

(30) Priority Data:
196 15 689.0 — 19 April 1996 (19.04.96) — DE
96119475.0 — 4 December 1996 (04.12.96) — EP
(34) Countries for which the regional or international application was filed: AT et al.

(71)(72) Applicant and Inventor: OBERMOSER, Karl [DE/DE]; Brunnäcker Strasse 10, D-90592 Lindelburg (DE).

(74) Agent: KURIG, Thomas; Kirschner & Kurig, Sollner Strasse 38, D-81479 München (DE).

(81) Designated States: AL, AM, AT, AU, AZ, BA, BB, BG, BR, BY, CA, CH, CN, CU, CZ, DK, EE, ES, FI, GB, GE, HU, IL, IS, JP, KE, KG, KP, KR, KZ, LC, LK, LR, LS, LT, LU, LV, MD, MG, MK, MN, MW, MX, NO, NZ, PL, PT, RO, RU, SD, SE, SG, SI, SK, TJ, TM, TR, TT, UA, UG, US, UZ, VN, ARIPO patent (GH, KE, LS, MW, SD, SZ, UG), Eurasian patent (AM, AZ, BY, KG, KZ, MD, RU, TJ, TM), European patent (AT, BE, CH, DE, DK, ES, FI, FR, GB, GR, IE, IT, LU, MC, NL, PT, SE), OAPI patent (BF, BJ, CF, CG, CI, CM, GA, GN, ML, MR, NE, SN, TD, TG).

Published
With international search report.

See Form PCT/IB/306.

(54) Title: HYDRAULIC RAM PUMP

(57) Abstract

The invention relates to a hydraulic ram pump, comprising: a propulsion water line fed with propulsion water (at 30), a delivery line (at 32) which can be connected to delivery water via a bottom valve (4), a ram pump valve (3) which is connected to the propulsion water line (1) and delivery line (2), the propulsion water flowing into the delivery line when the ram pump valve (3) is open and, after the closing of the ram pump valve, the water column flowing further in the delivery line sucking in delivery water via the bottom valve (4), the ram pump valve (3) being held by spring force in its closed position separating the propulsion water line from the delivery line, and a pressure reservoir (5) being provided, which is connected to the propulsion water line upstream of the ram pump valve (3) in the direction of flow, the valve member (4a) being of annular design, axially movable and tightly connected to the delivery line, the effective cross section of this connection being larger than the cross section of the valve seat, and the valve seat (6) of the ram pump valve (3) and the valve seat (4a) of the bottom valve being mechanically coupled in order to transmit kinetic energy.

