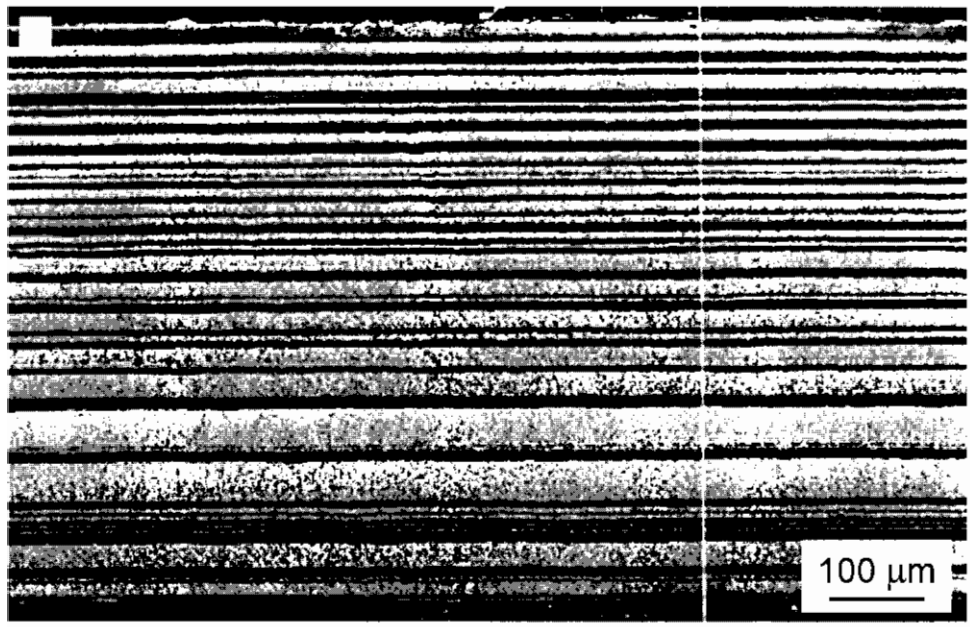

FIG. 1

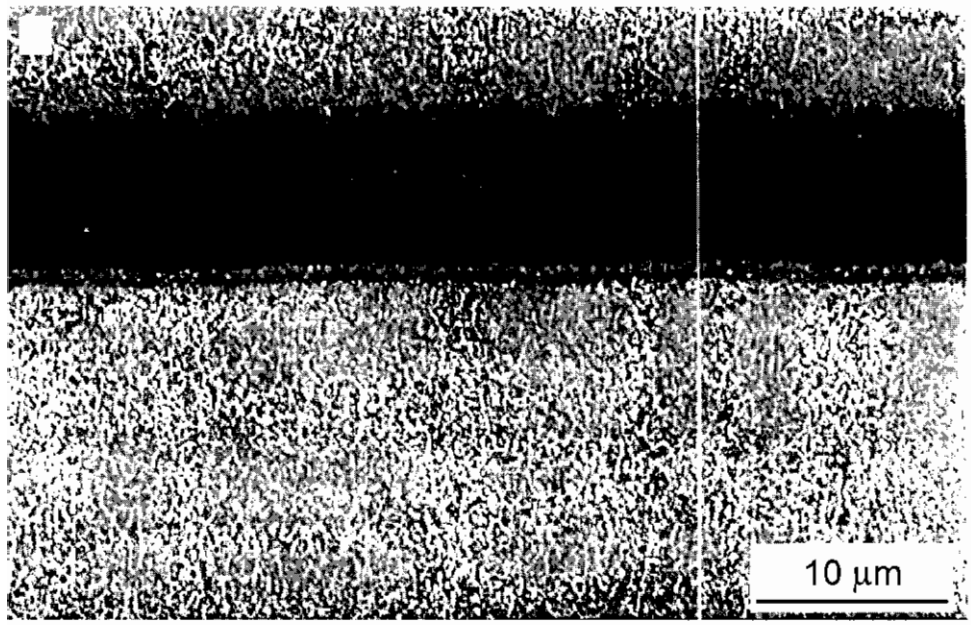

FIG. 2

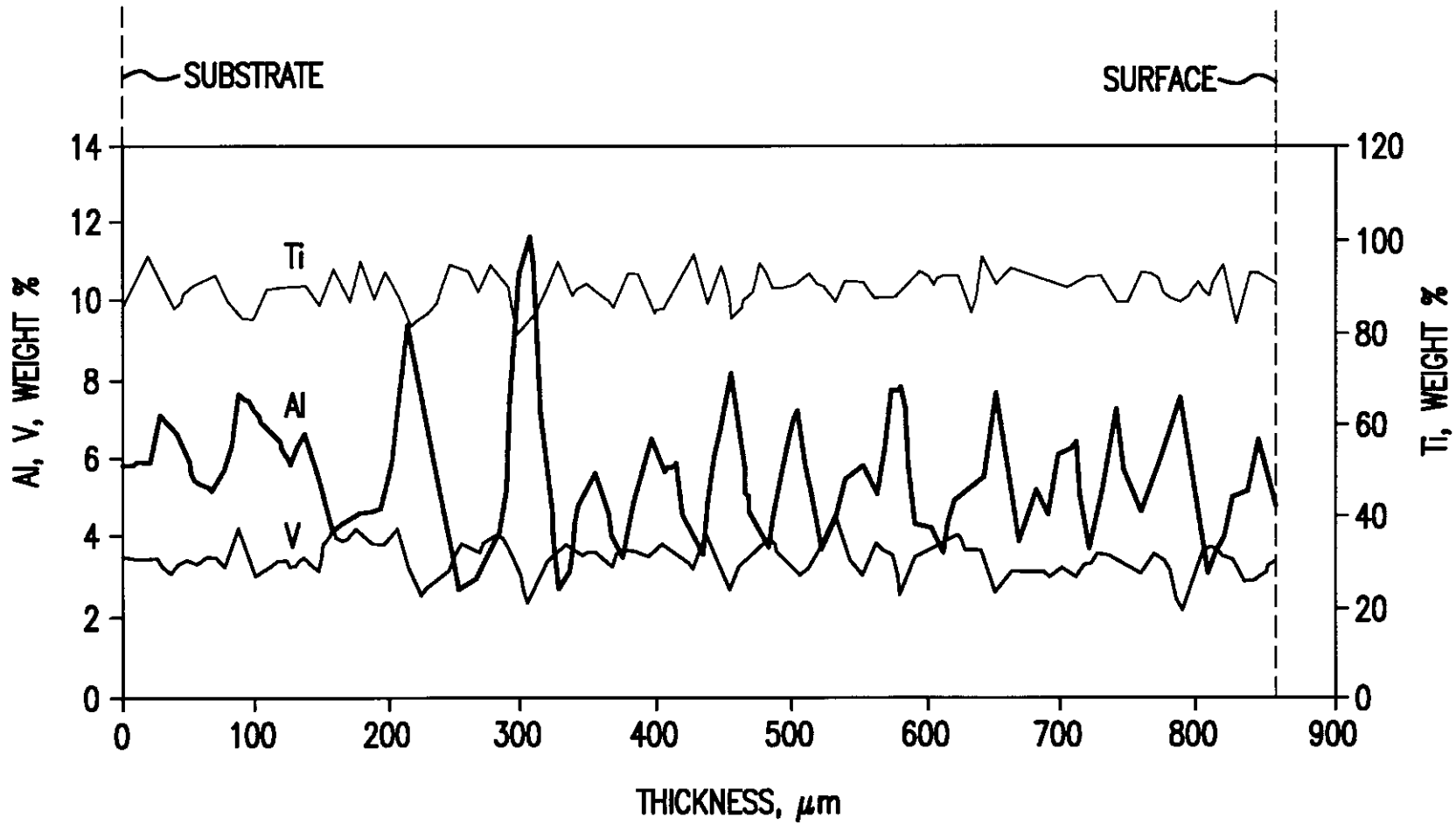
SUBSTRATE
SURFACE
Ti
Al
V
Al, V, WEIGHT %
Ti, WEIGHT %
THICKNESS, μm
0
2
4
6
8
10
12
14
0
20
40
60
80
100
120
0
100
200
300
400
500
600
700
800
900

FIG.3

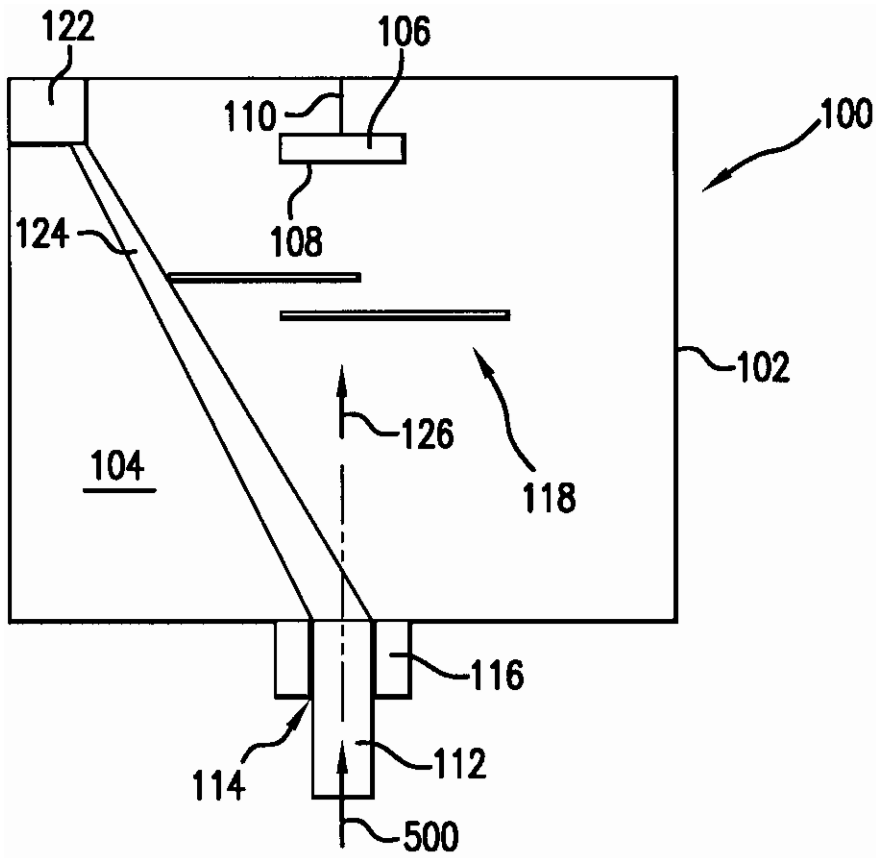

FIG.4

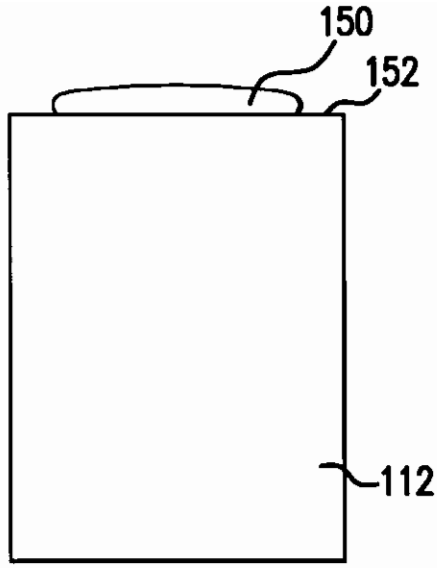

FIG.5

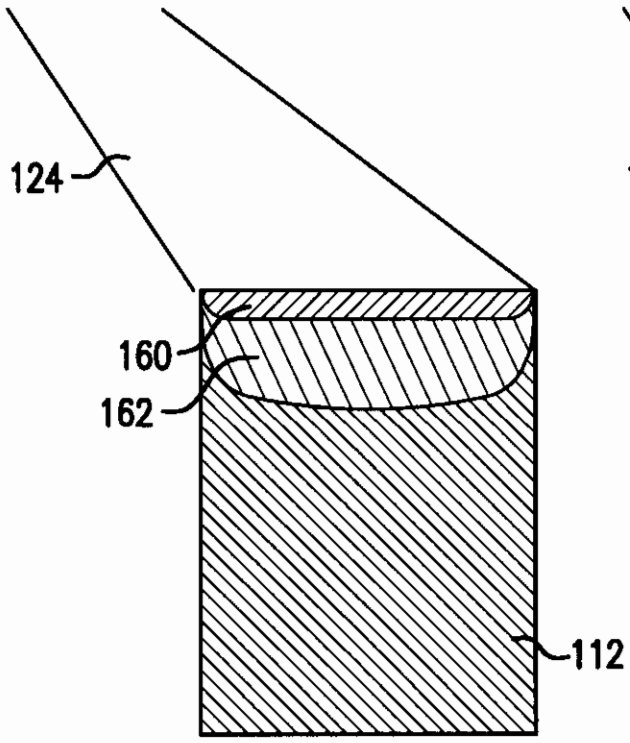

FIG.6

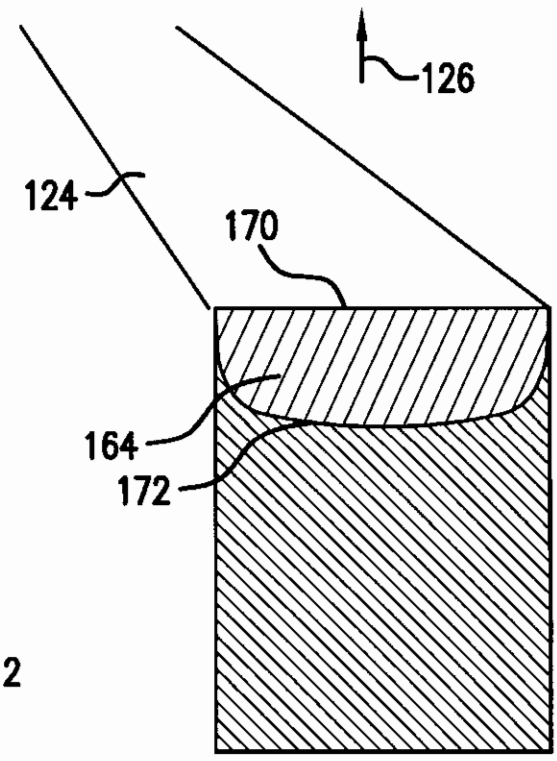

FIG.7

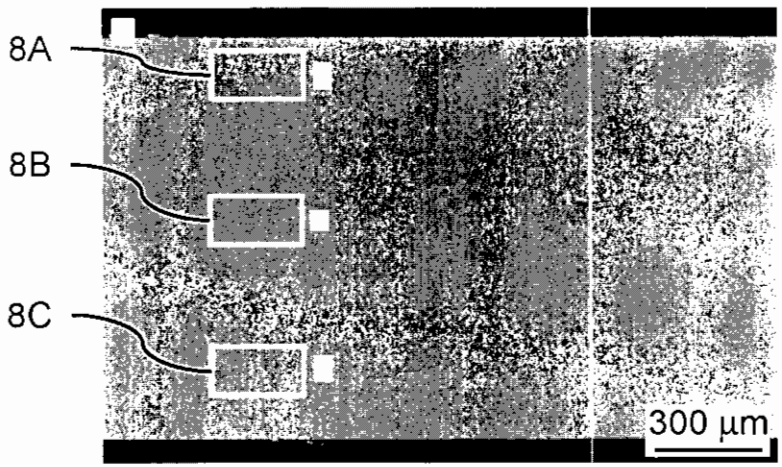

FIG.8

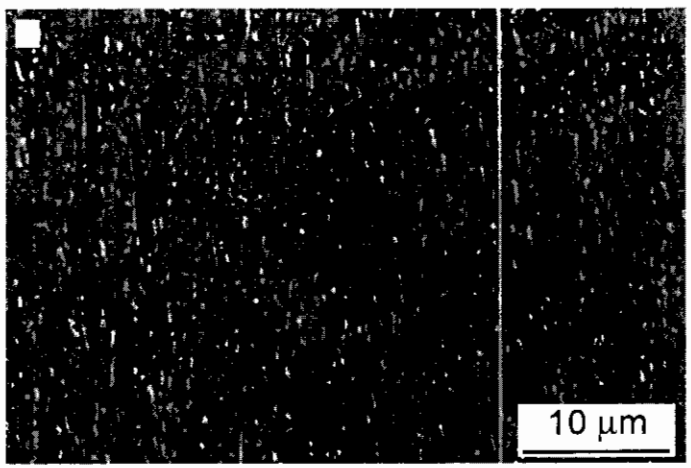

FIG.8B

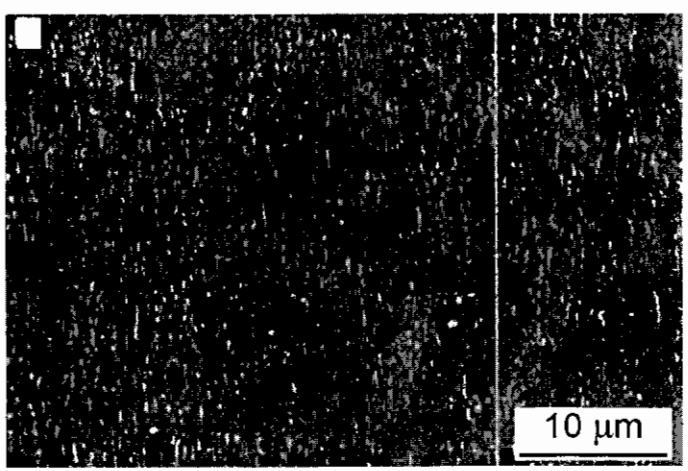

FIG.8A

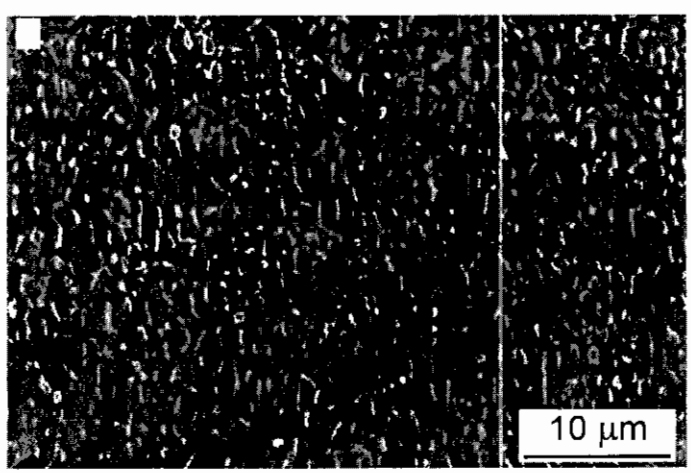

FIG.8C

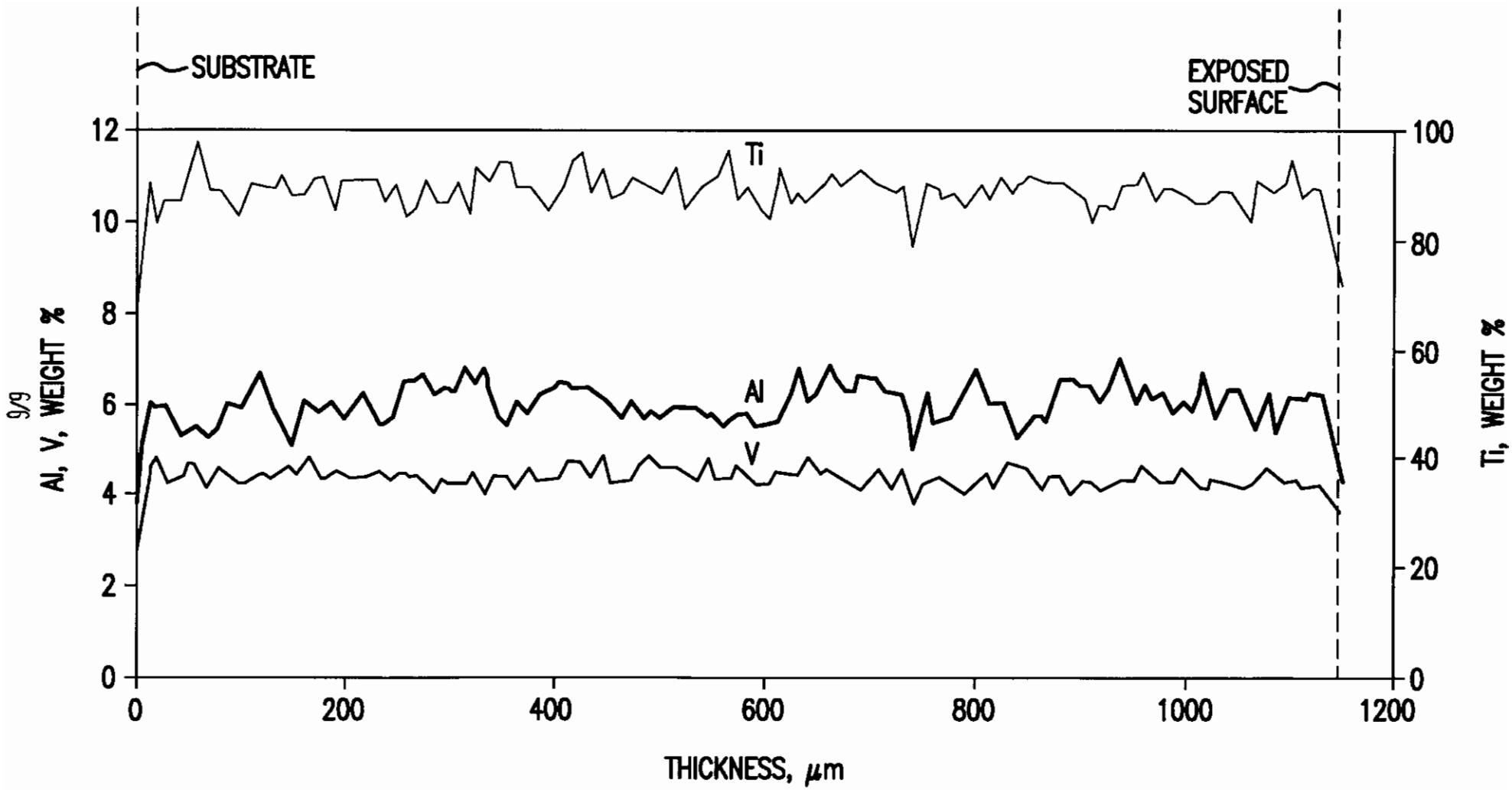
SUBSTRATE
EXPOSED SURFACE
Ti
Al
V
Al, V, WEIGHT %
Ti, WEIGHT %
THICKNESS, μm
0
2
4
6
8
10
12
0
20
40
60
80
100
0
200
400
600
800
1000
1200

FIG.9