(12) INTERNATIONAL APPLICATION PUBLISHED UNDER THE PATENT COOPERATION TREATY (PCT)

(19) World Intellectual Property Organization
International Bureau

(43) International Publication Date
8 April 2004 (08.04.2004)

PCT

(10) International Publication Number
WO 2004/029487 A3

(51) International Patent Classification[7]: F16J 15/08, F16L 21/05

(21) International Application Number: PCT/US2003/030123

(22) International Filing Date: 25 September 2003 (25.09.2003)

(25) Filing Language: English

(26) Publication Language: English

(30) Priority Data:

60/413,332	25 September 2002 (25.09.2002)	US
10/671,262	25 September 2003 (25.09.2003)	US

(71) Applicant: **DRIL-QUIP, INC.** [US/US]; 13550 Hempstead Highway, Houston, TX 77040 (US).

(72) Inventors: **WALKER, James, M.**; 8 East Rivercrest, Houston, TX 77042 (US). **MILBERGER, Lionel, J.**; 8911 Rocky Lane, Houston, TX 77040 (US).

(74) Agent: **BRYSON, Alan, C.**; Browning Bushman, P.C., 5718 Westheimer, Suite 1800, Houston, TX 77040 (US).

(81) Designated States *(national)*: AE, AG, AL, AM, AT, AU, AZ, BA, BB, BG, BR, BY, BZ, CA, CH, CN, CO, CR, CU, CZ, DE, DK, DM, DZ, EC, EE, EG, ES, FI, GB, GD, GE, GH, GM, HR, HU, ID, IL, IN, IS, JP, KE, KG, KP, KR, KZ, LC, LK, LR, LS, LT, LU, LV, MA, MD, MG, MK, MN, MW, MX, MZ, NI, NO, NZ, OM, PG, PH, PL, PT, RO, RU, SC, SD, SE, SG, SK, SL, SY, TJ, TM, TN, TR, TT, TZ, UA, UG, UZ, VC, VN, YU, ZA, ZM, ZW.

(84) Designated States *(regional)*: ARIPO patent (GH, GM, KE, LS, MW, MZ, SD, SL, SZ, TZ, UG, ZM, ZW), Eurasian patent (AM, AZ, BY, KG, KZ, MD, RU, TJ, TM), European patent (AT, BE, BG, CH, CY, CZ, DE, DK, EE,

[Continued on next page]

(54) Title: METAL SEAL WITH CORROSION RESISTANT ALLOY OVERLAY

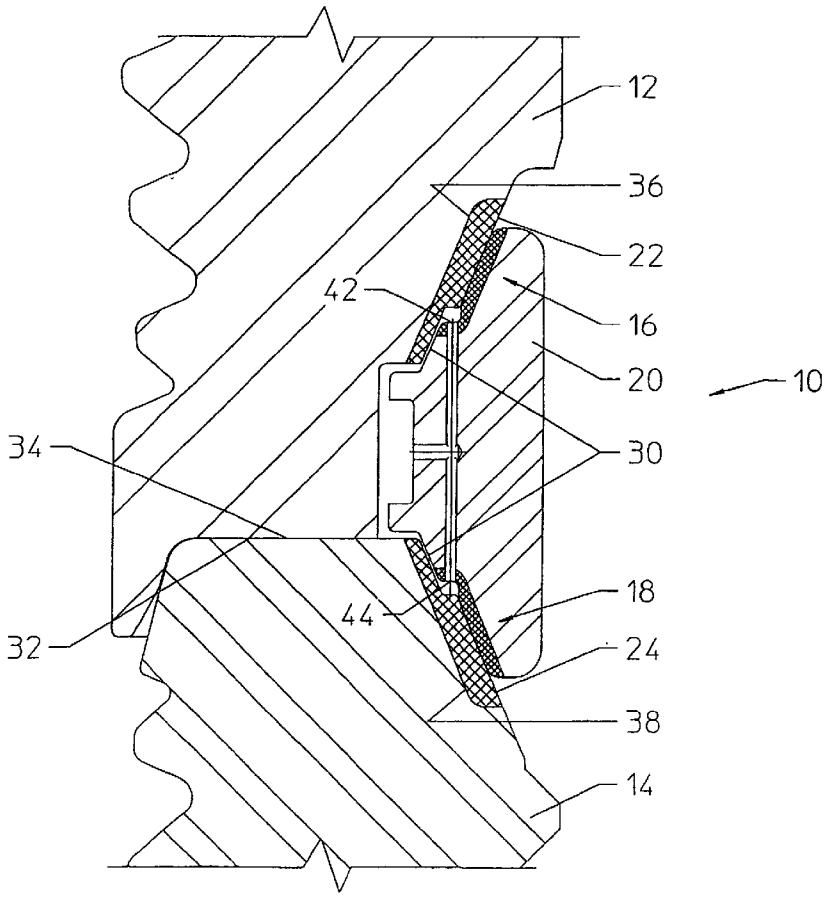

(57) Abstract: A composite metal sealing ring and method are provided for sealing between tubular members. First (12) and second (14) tubular members have first (22) and second (24) conical inner sealing surfaces. A metal sealing ring (20) has corrosion-resistant inlays (16 and 18) defining opposing outer sealing surfaces for sealing with the first and second conical inner sealing surfaces. The resulting composite sealing ring has the corrosion-resistant benefits of stainless steel at the sealing surfaces, along with the desired expansion ratio of a conventional carbon steel.

WO 2004/029487 A3

ES, FI, FR, GB, GR, HU, IE, IT, LU, MC, NL, PT, RO, SE, SI, SK, TR), OAPI patent (BF, BJ, CF, CG, CI, CM, GA, GN, GQ, GW, ML, MR, NE, SN, TD, TG).

Published:

— *with international search report*

— *before the expiration of the time limit for amending the claims and to be republished in the event of receipt of amendments*

(88) Date of publication of the international search report:
15 July 2004

(15) Information about Correction:
Previous Correction:
see PCT Gazette No. 21/2004 of 21 May 2004, Section II

For two-letter codes and other abbreviations, refer to the "Guidance Notes on Codes and Abbreviations" appearing at the beginning of each regular issue of the PCT Gazette.