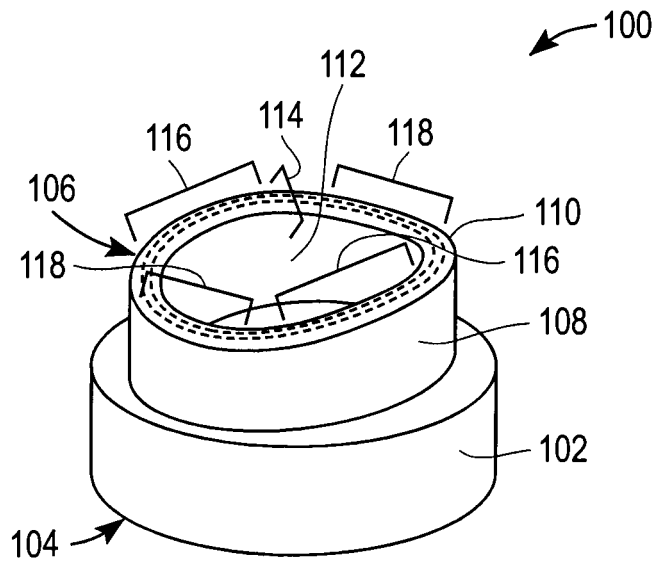

FIG. 1

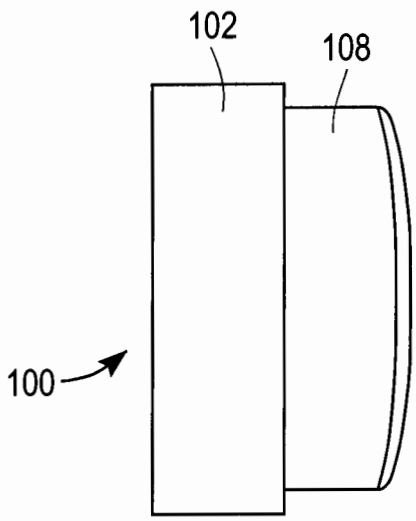

FIG. 2B

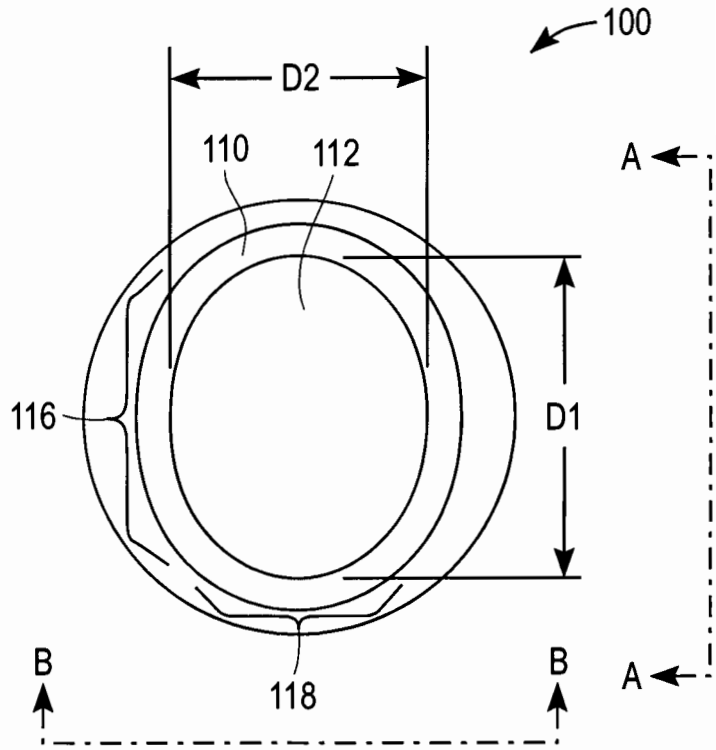

FIG. 2A

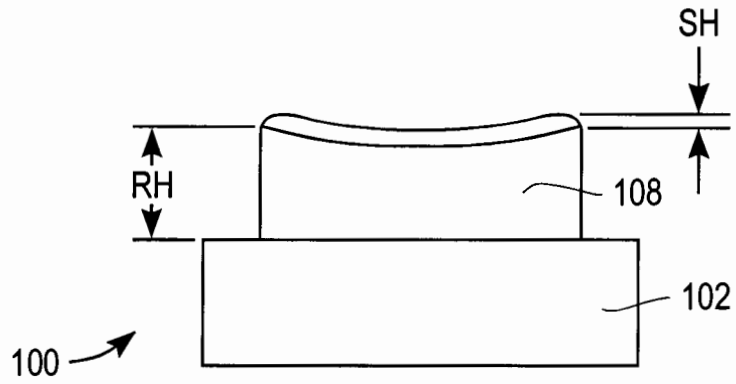

FIG. 2C

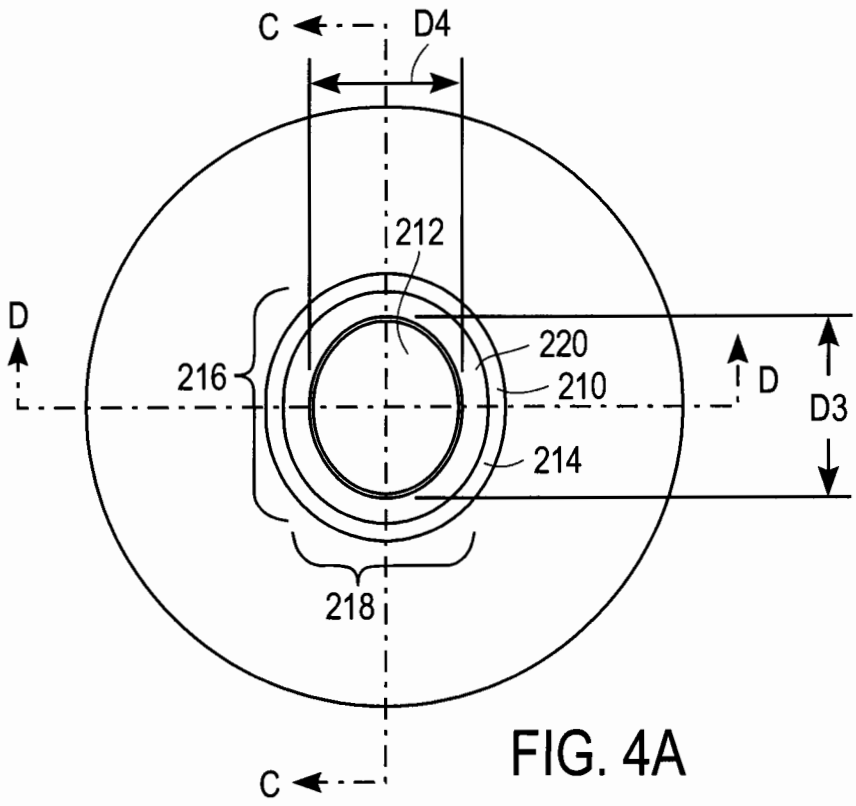

FIG. 4A

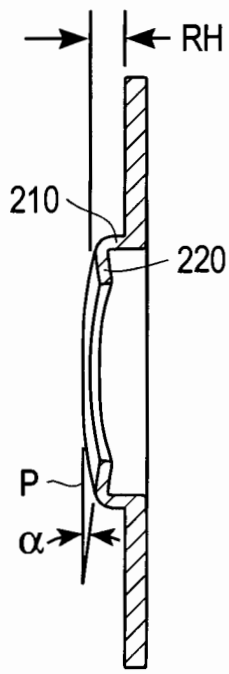

FIG. 4B

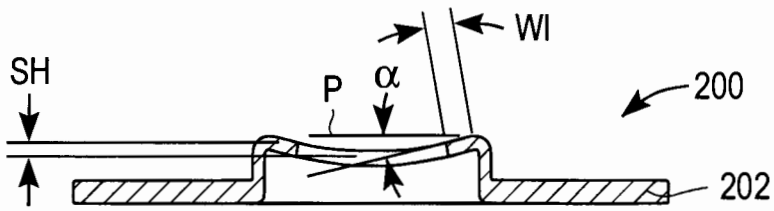

FIG. 4C

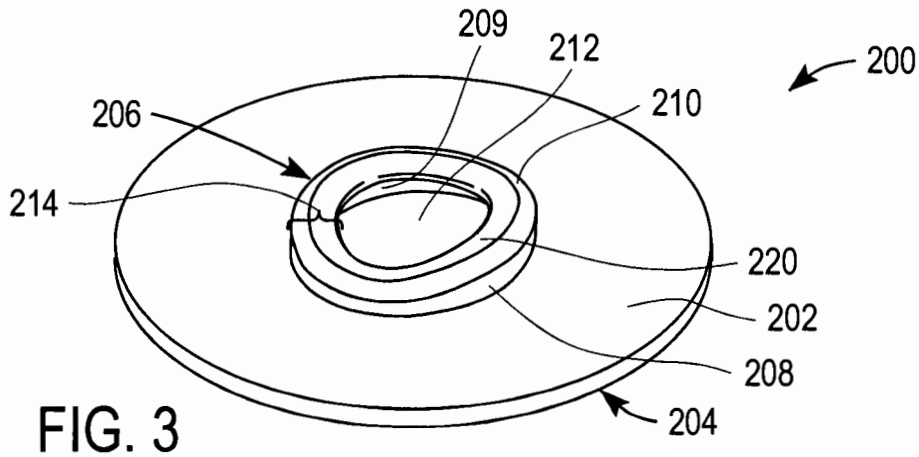

FIG. 3

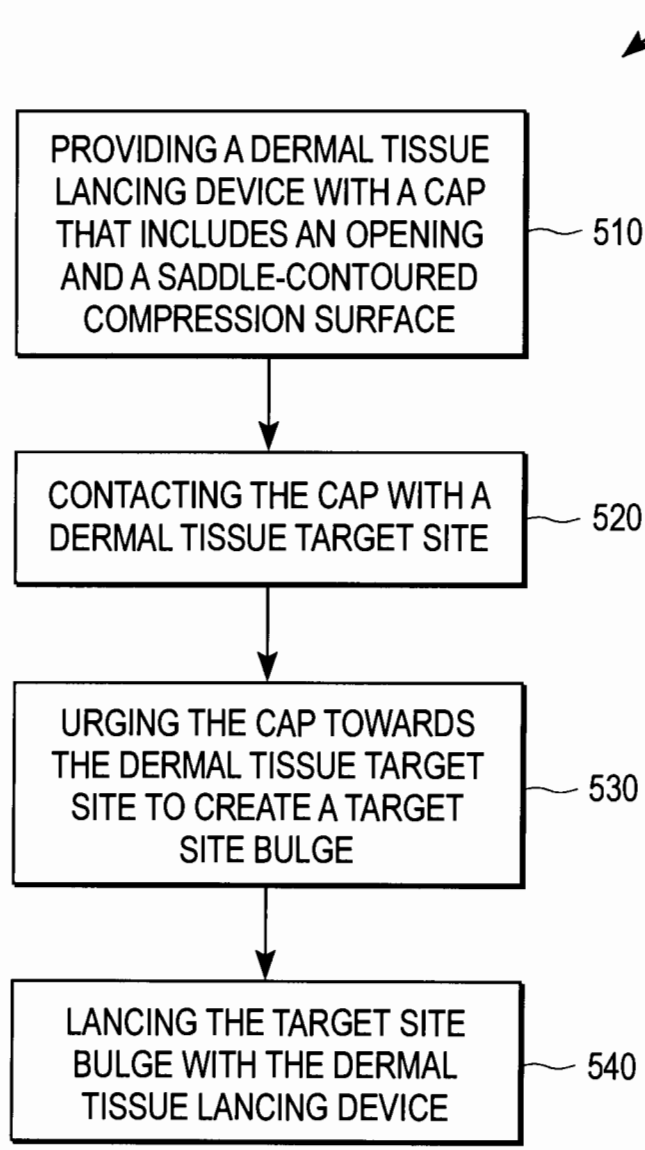
500
PROVIDING A DERMAL TISSUE LANCING DEVICE WITH A CAP THAT INCLUDES AN OPENING AND A SADDLE-CONTOURED COMPRESSION SURFACE
510
CONTACTING THE CAP WITH A DERMAL TISSUE TARGET SITE
520
URGING THE CAP TOWARDS THE DERMAL TISSUE TARGET SITE TO CREATE A TARGET SITE BULGE
530
LANCING THE TARGET SITE BULGE WITH THE DERMAL TISSUE LANCING DEVICE
540

FIG. 5