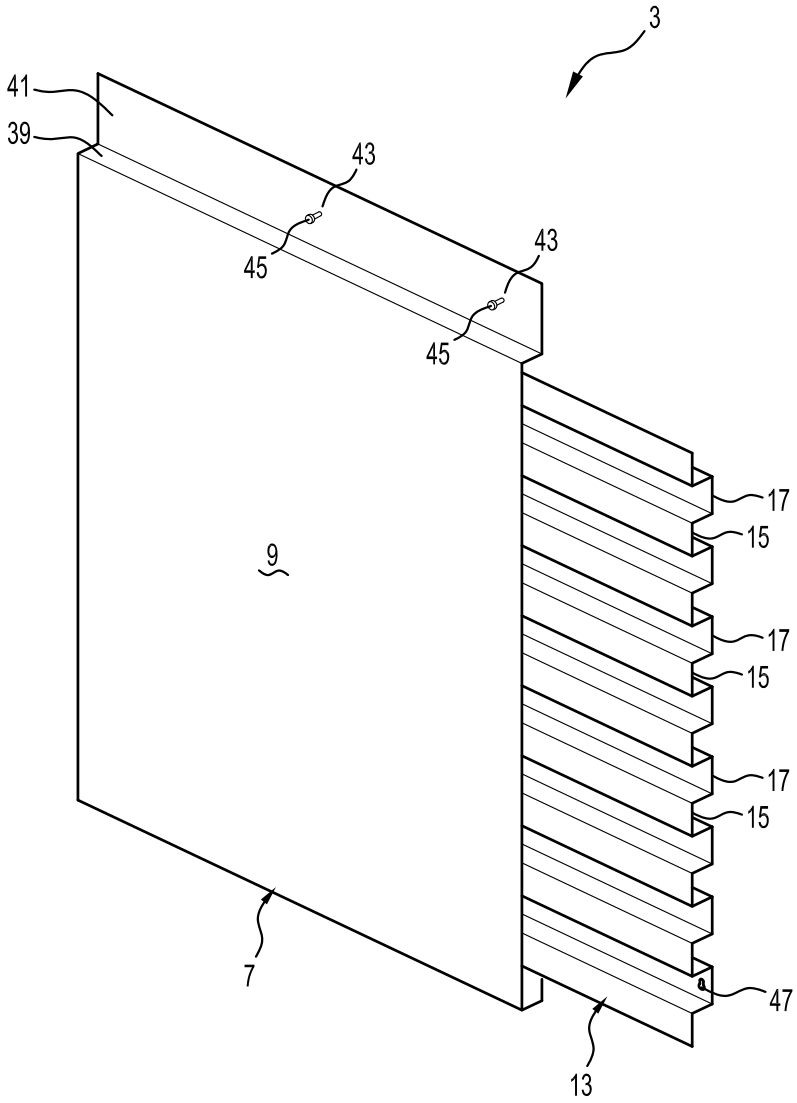

Figure 1

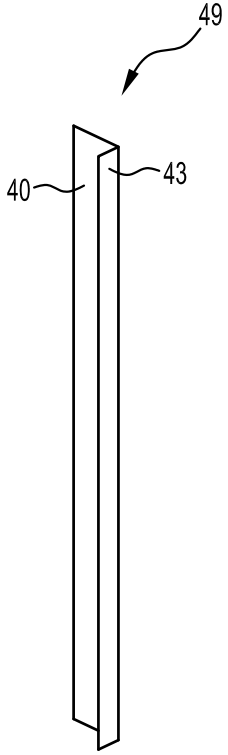

Figure 3

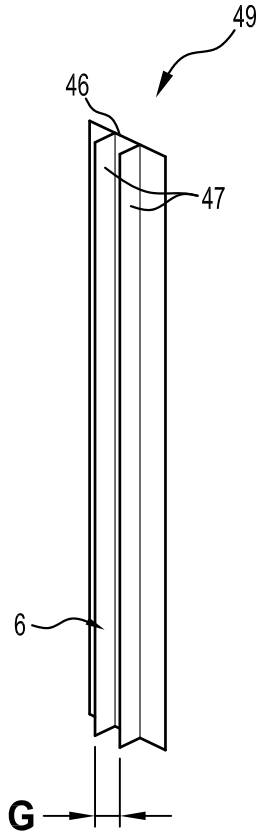

Figure 4

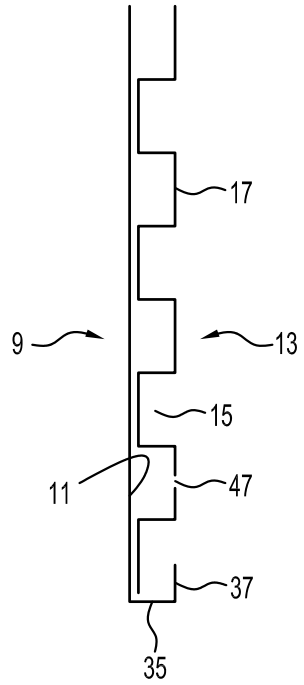

Figure 2

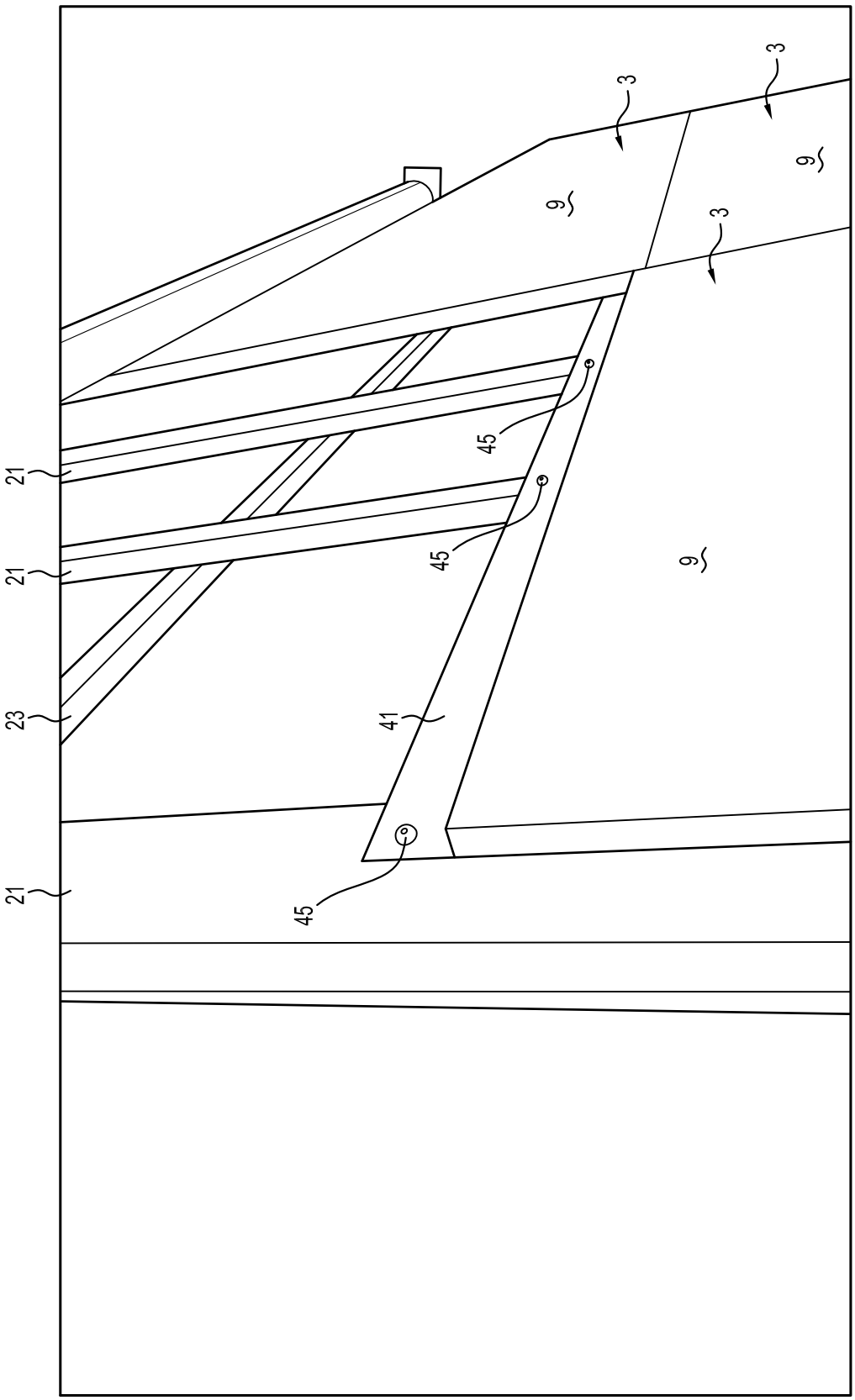

Figure 5

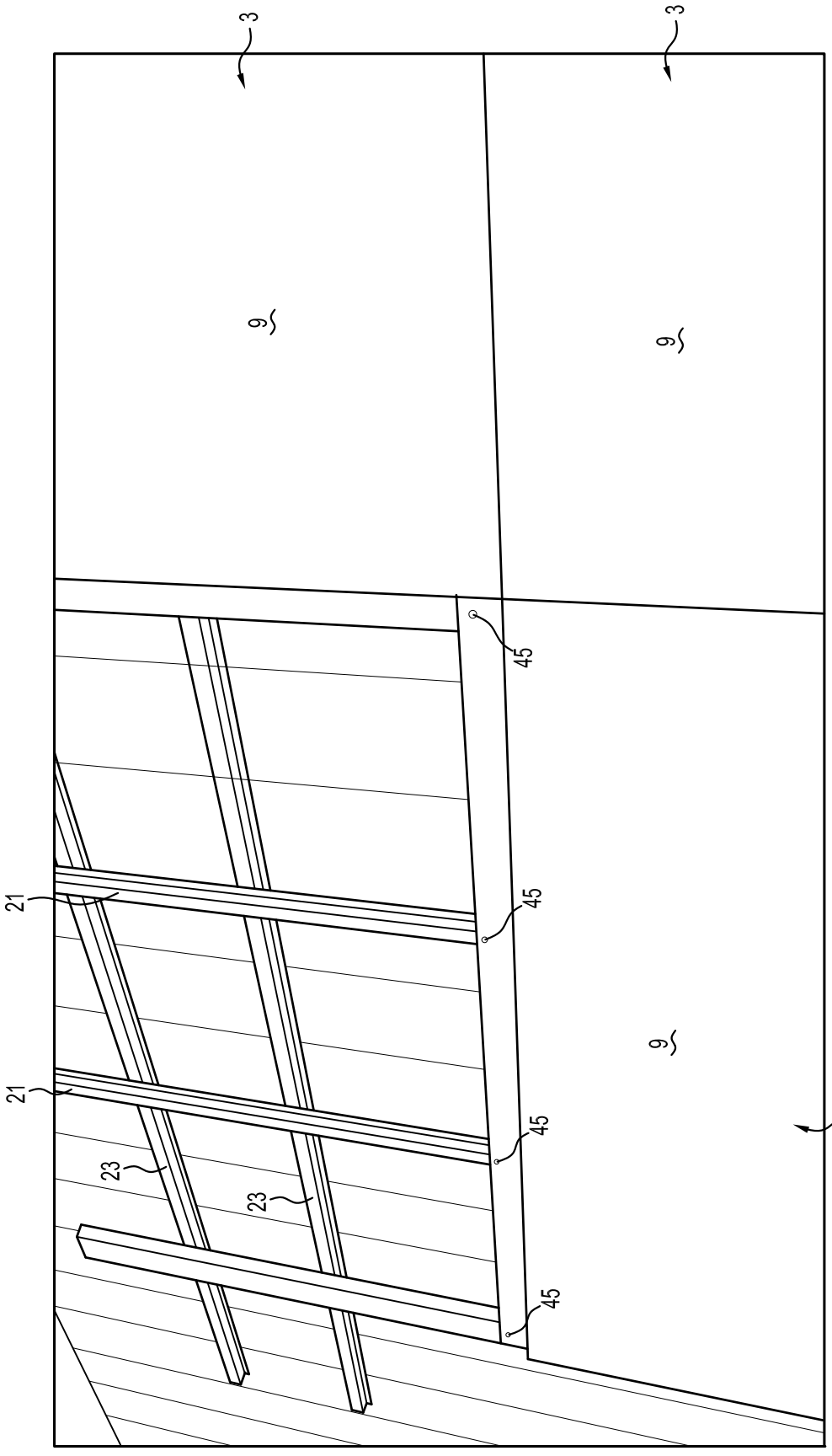

Figure 6

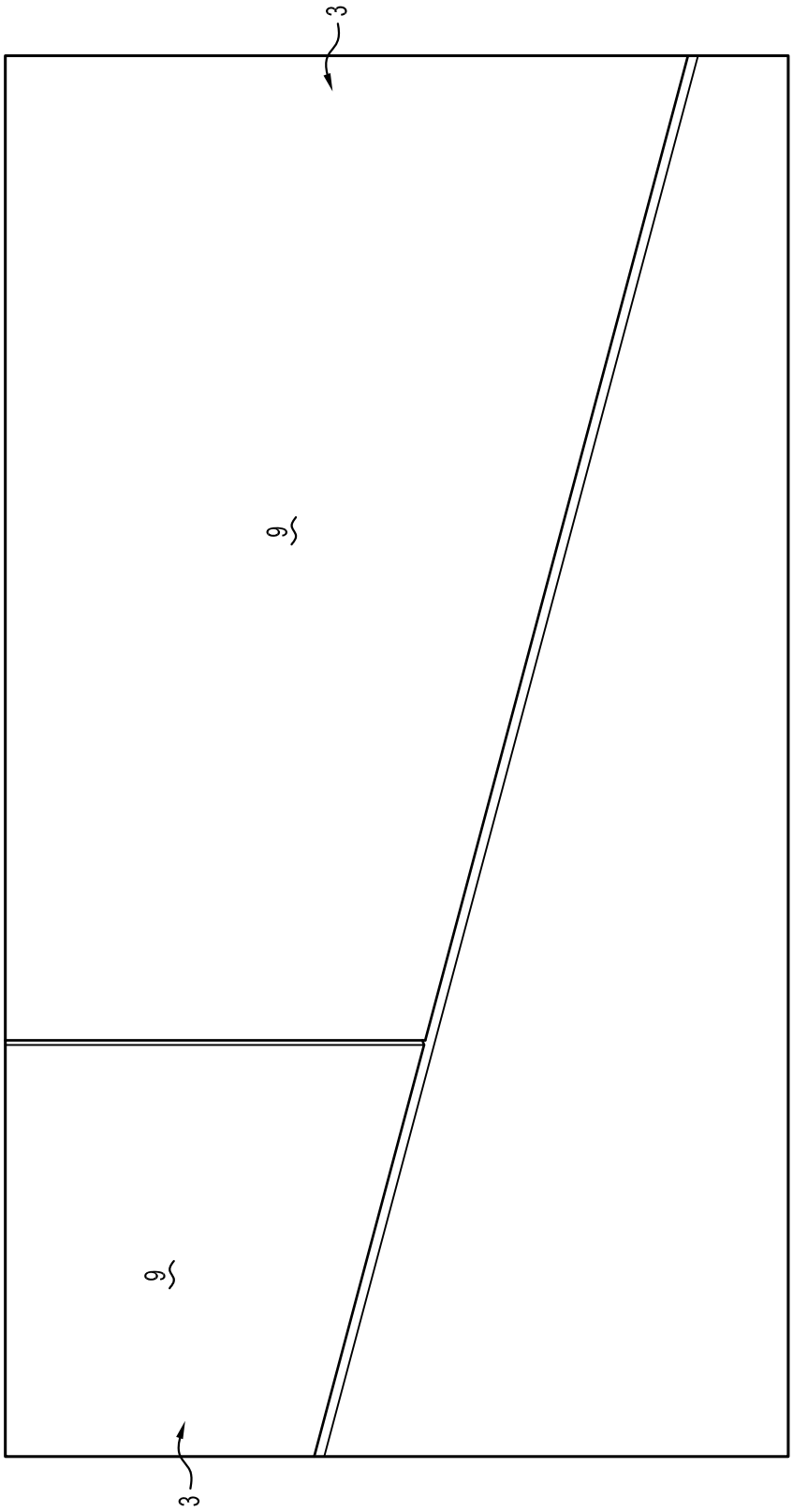

Figure 7

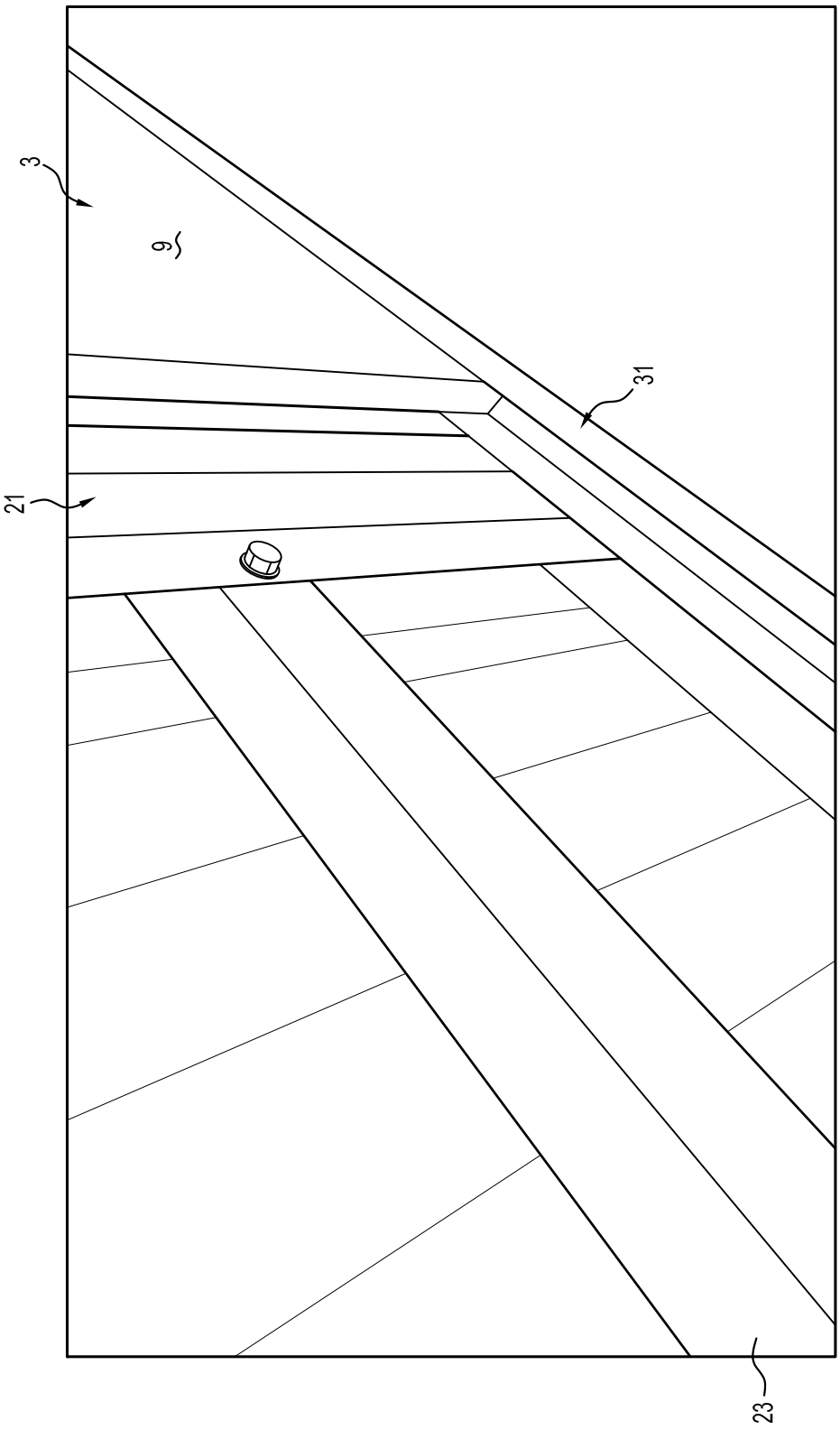

Figure 8

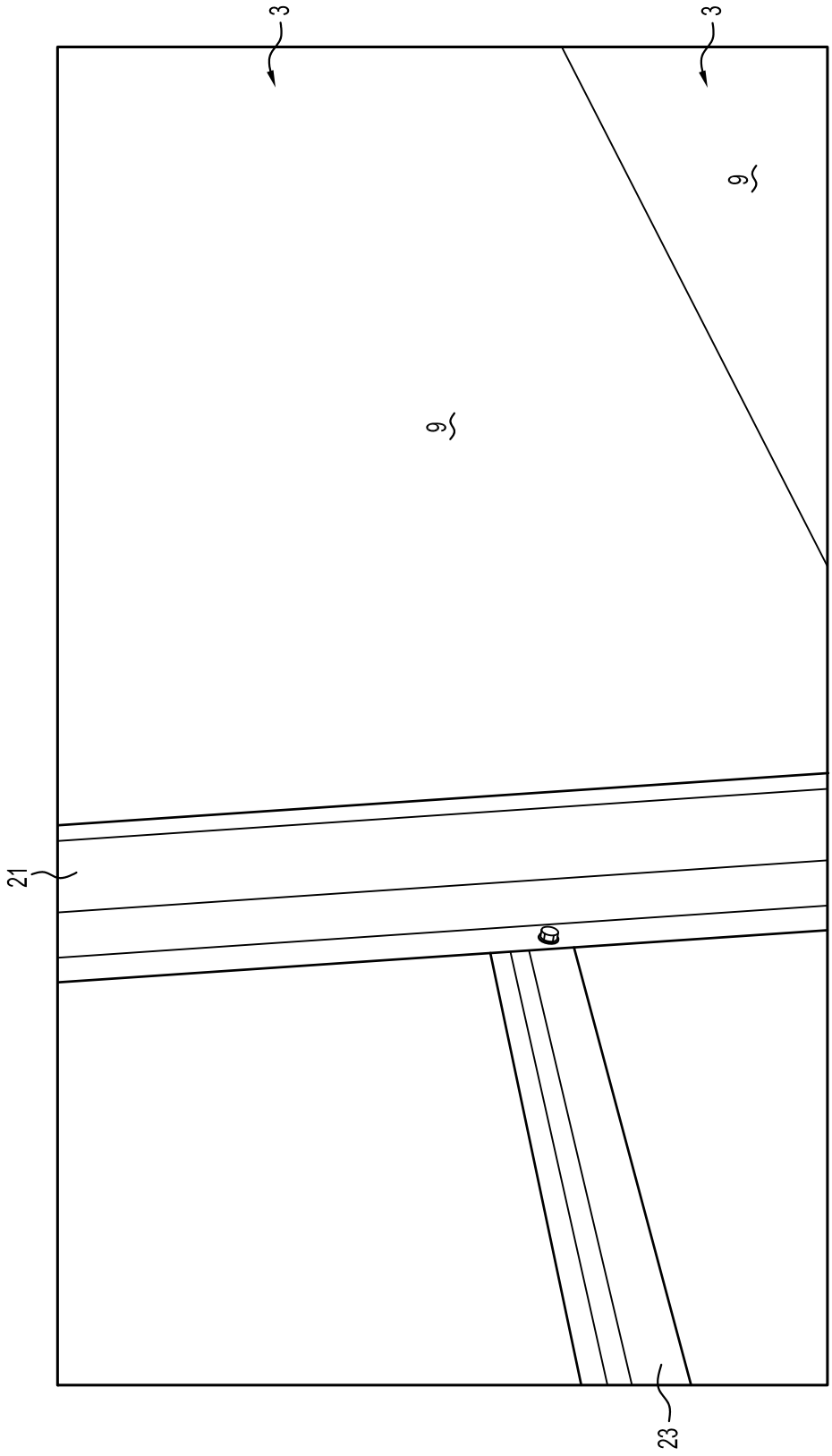

Figure 9

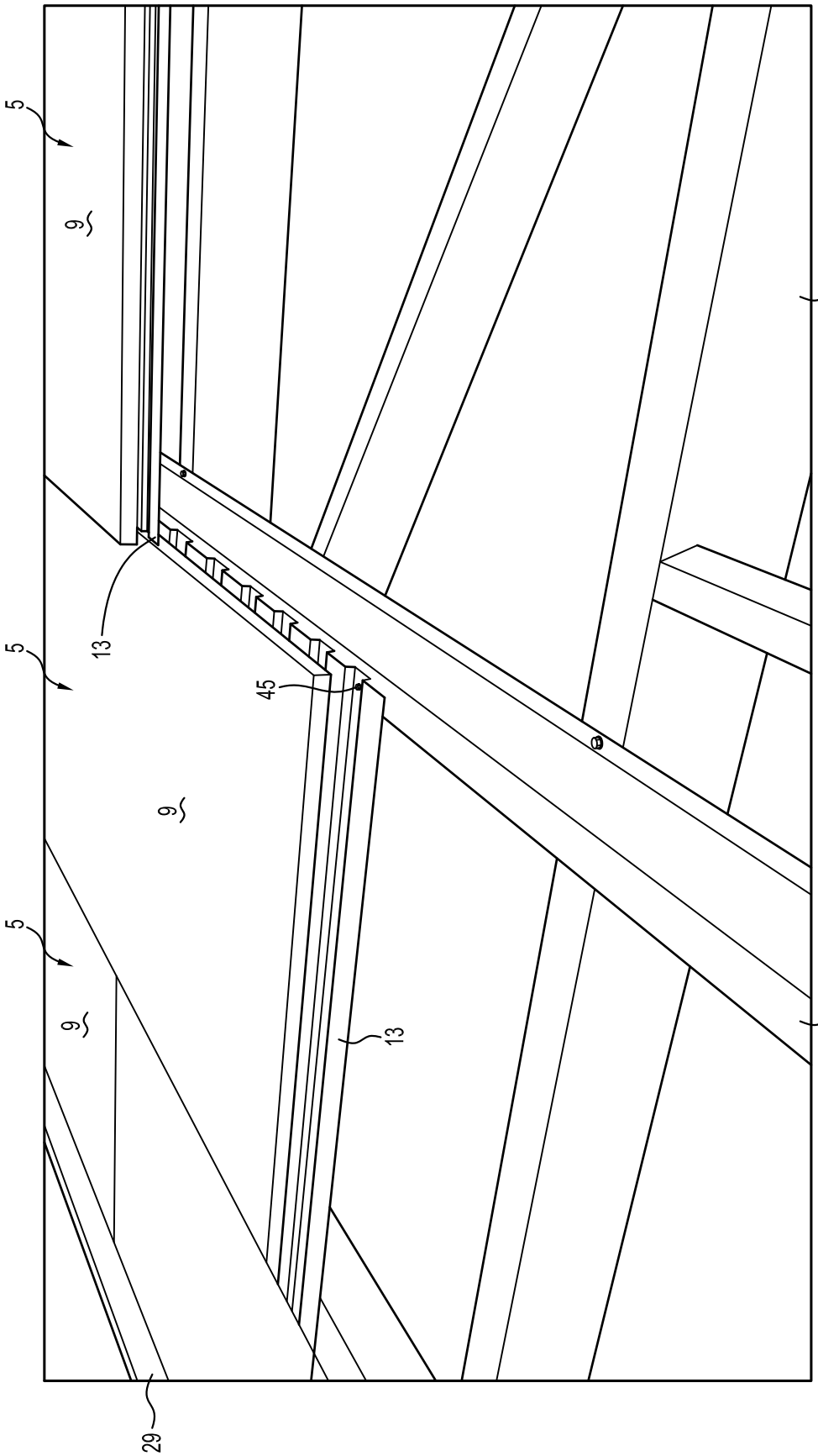

Figure 10

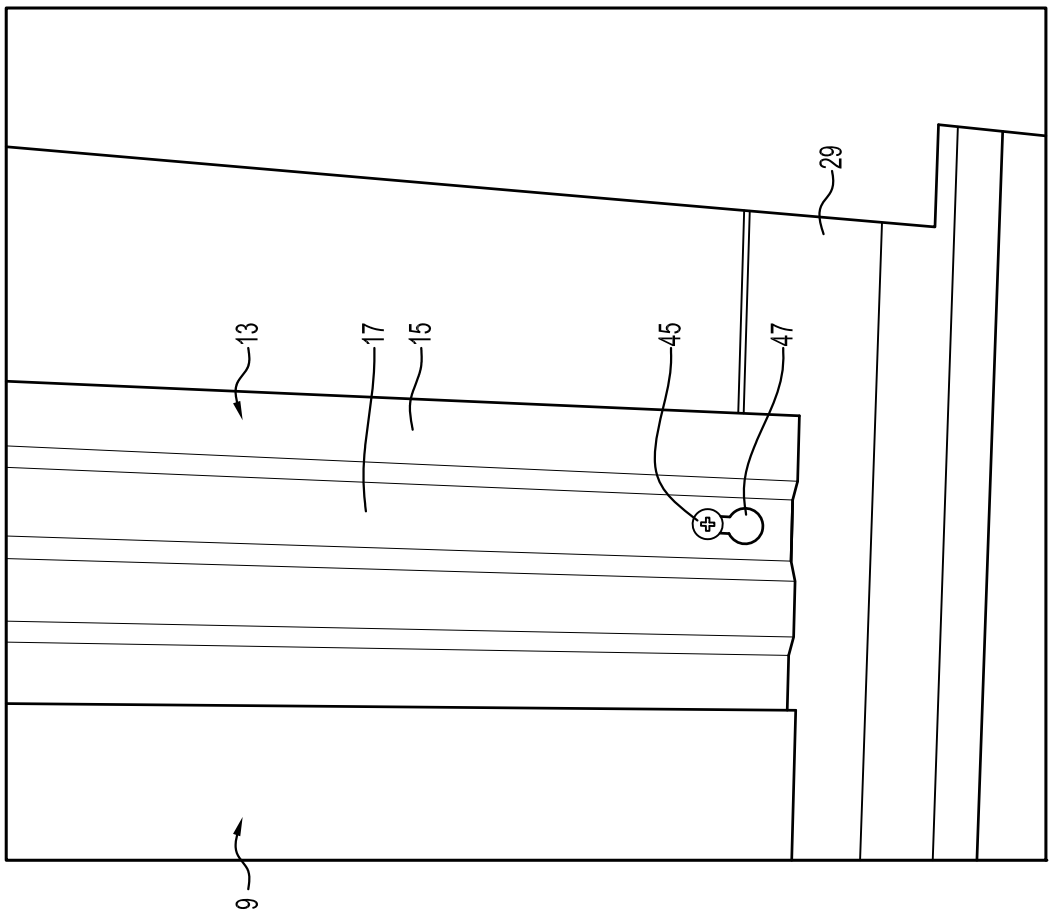

Figure 11

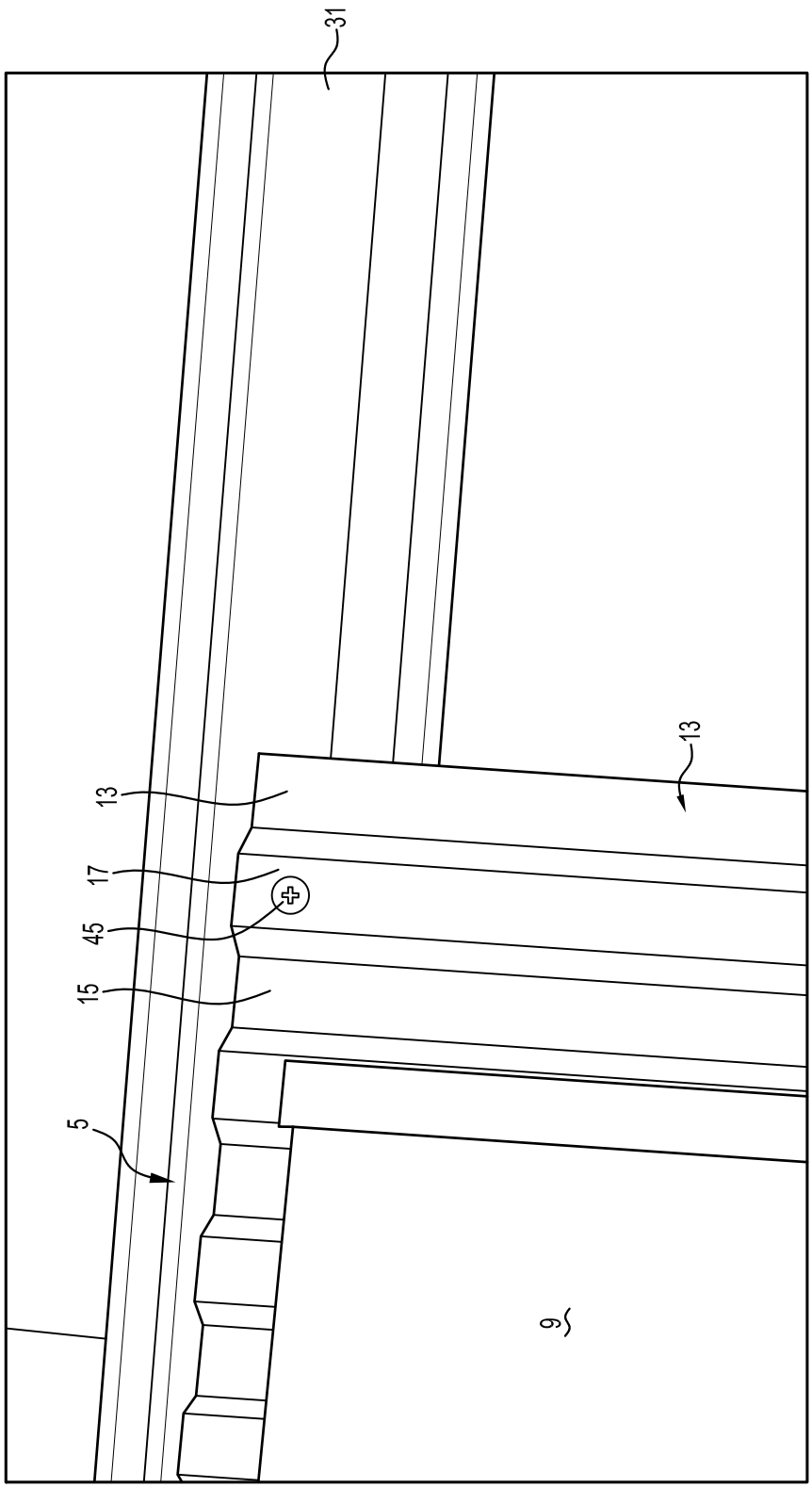

Figure 12

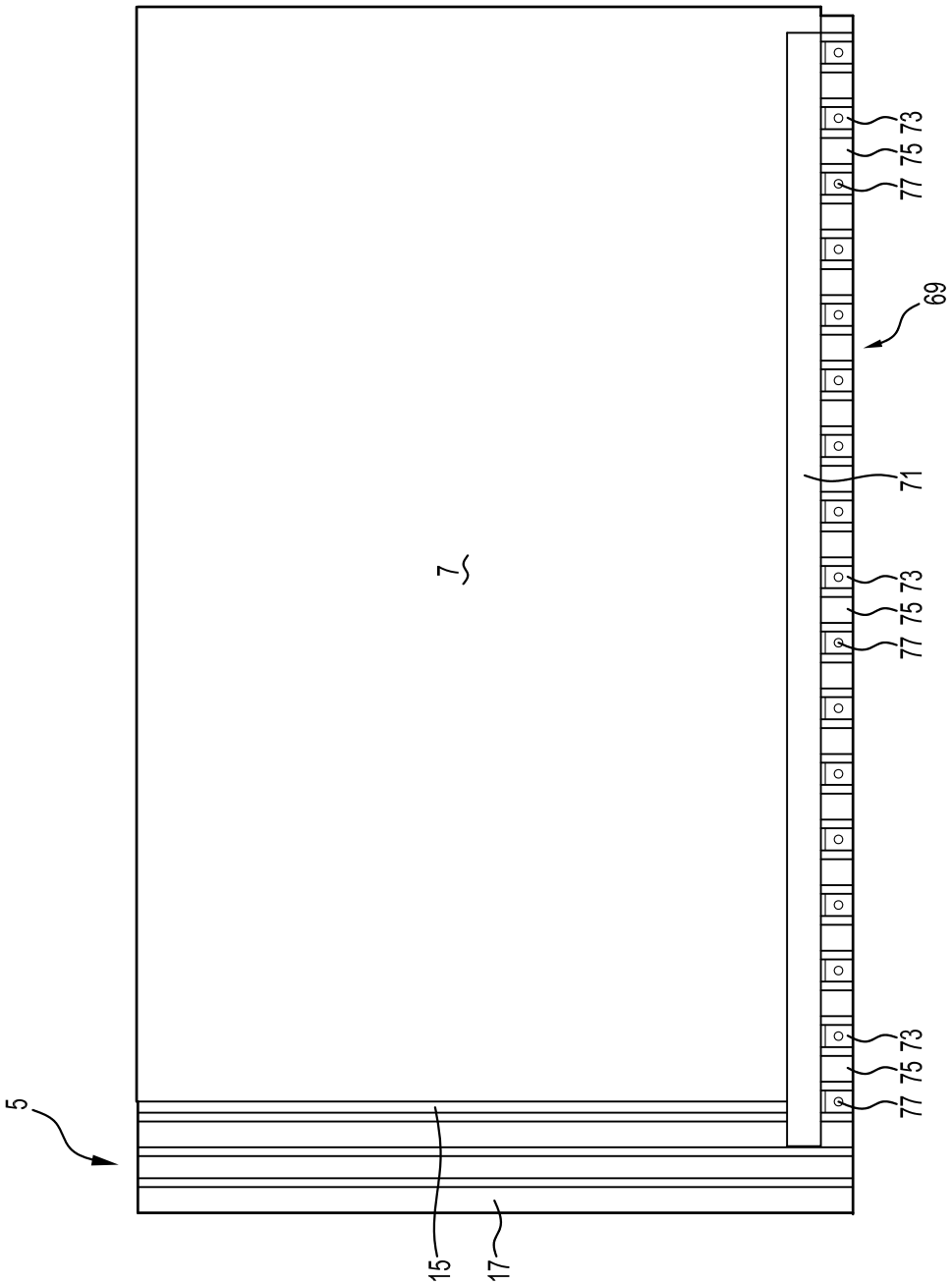

Figure 13

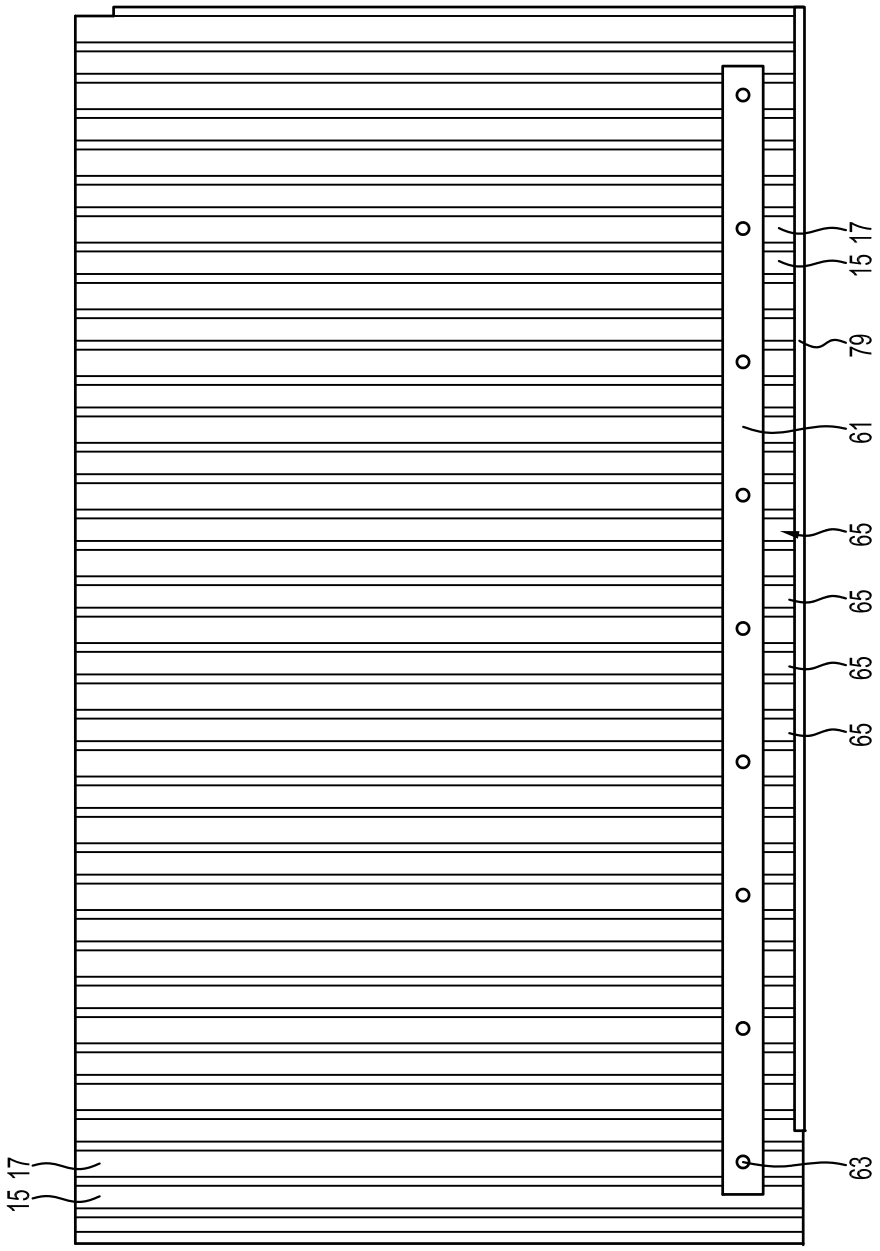

Figure 14



Figure 16

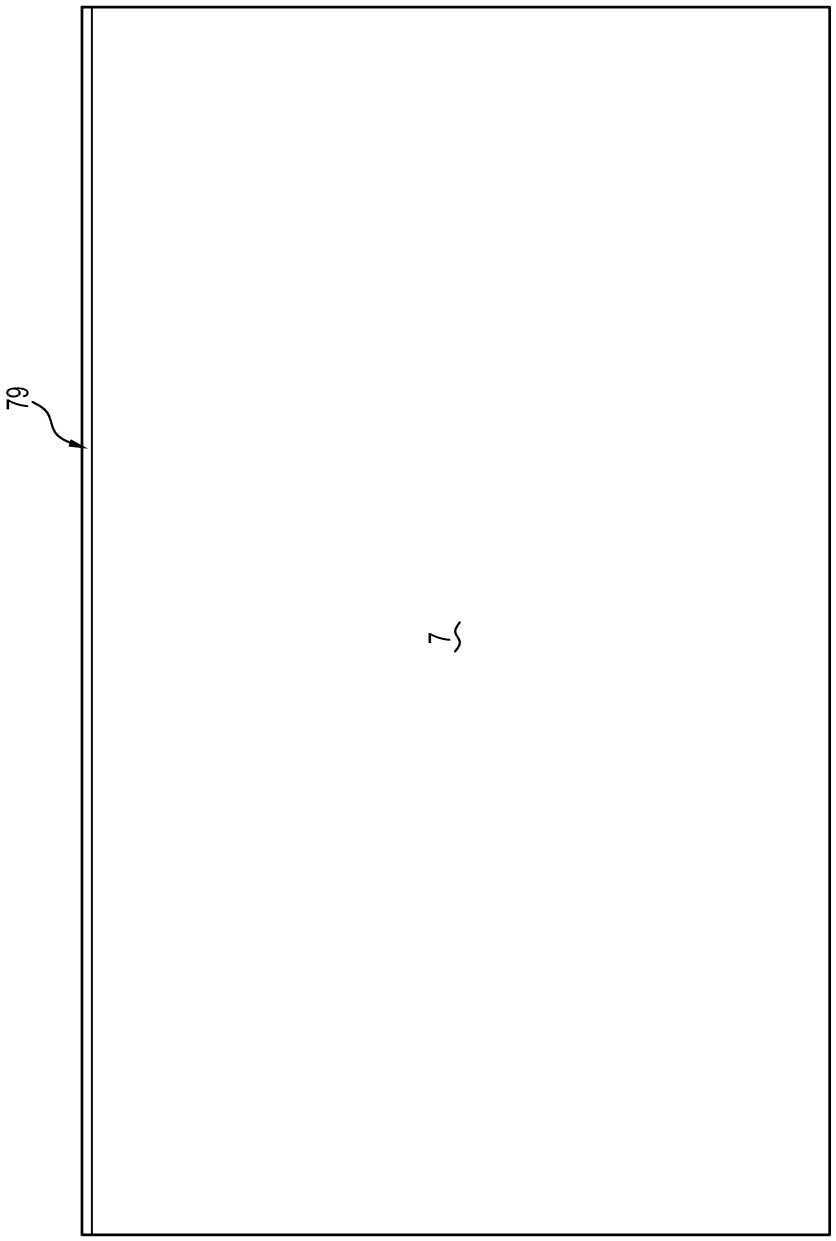

Figure 15

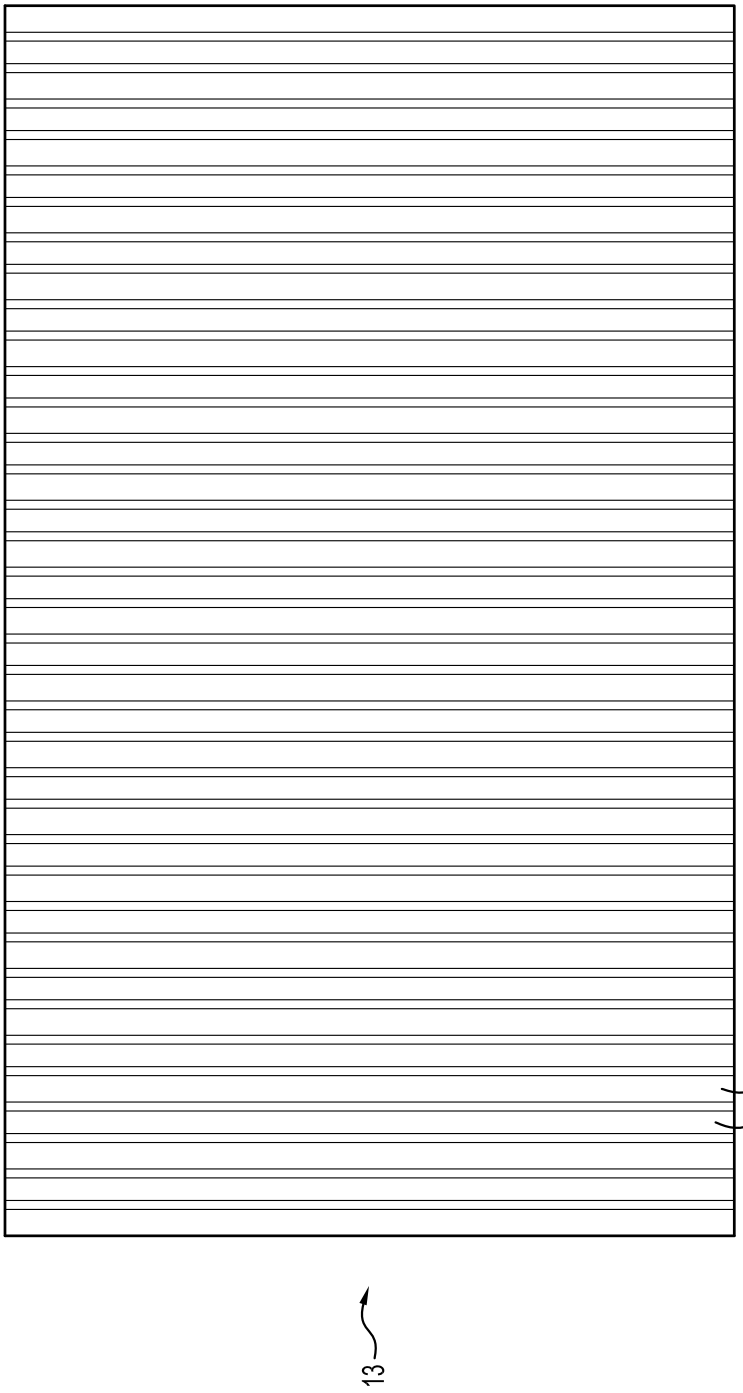

Figure 17

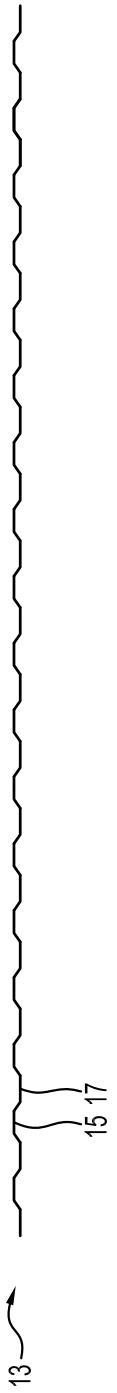

Figure 18

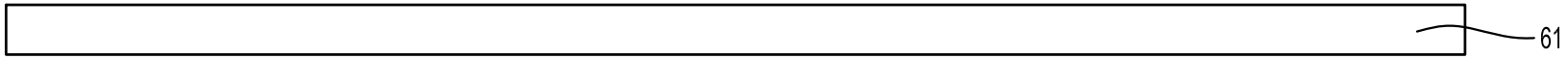

Figure 19

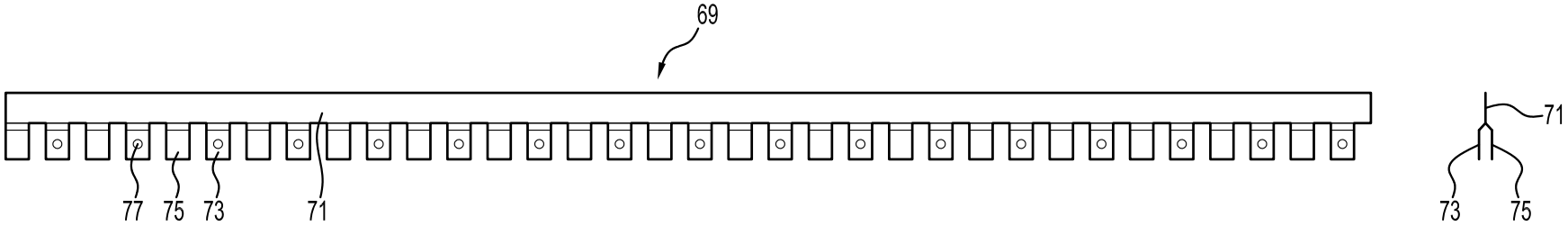

Figure 20

Figure 21

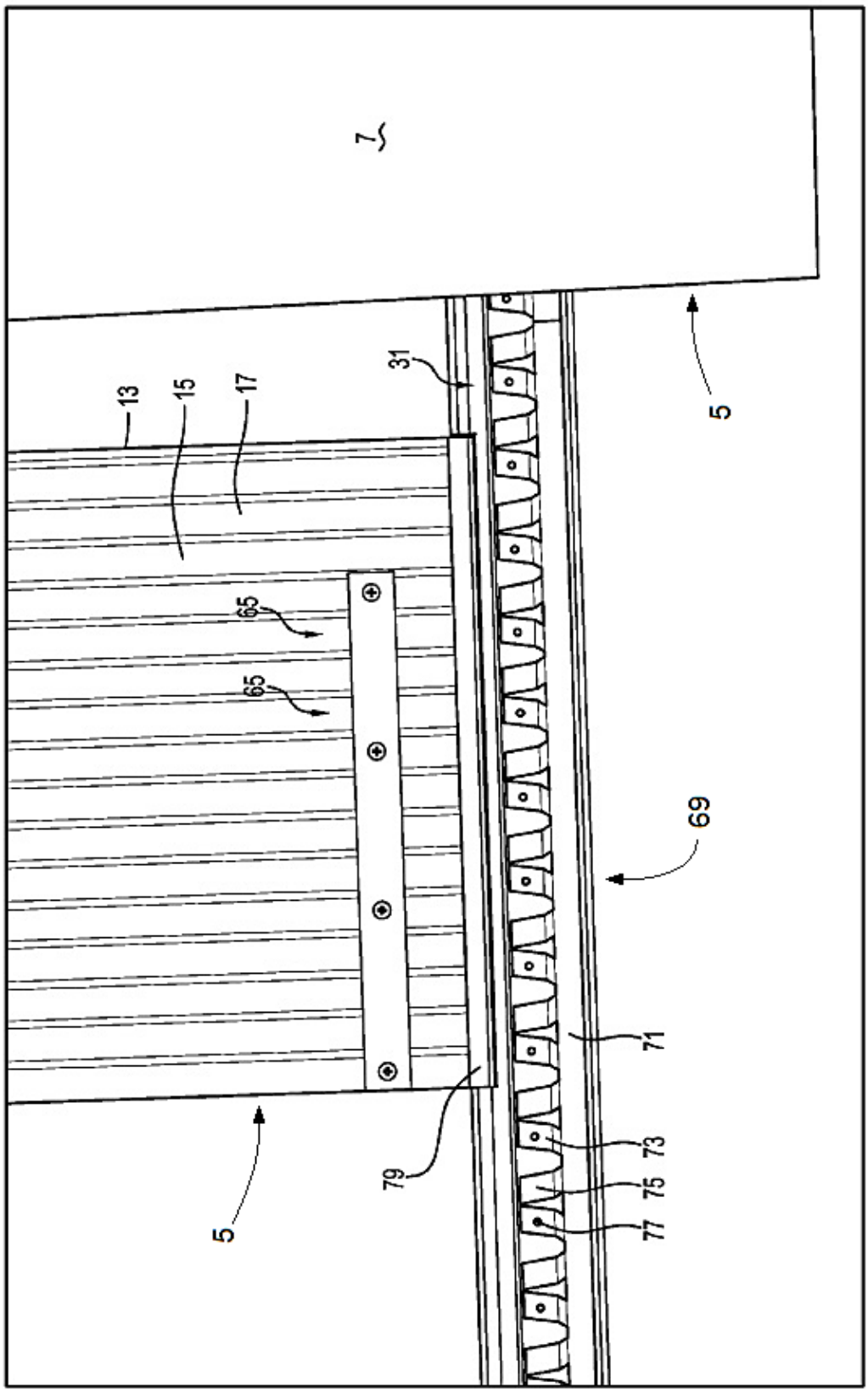

Figure 22

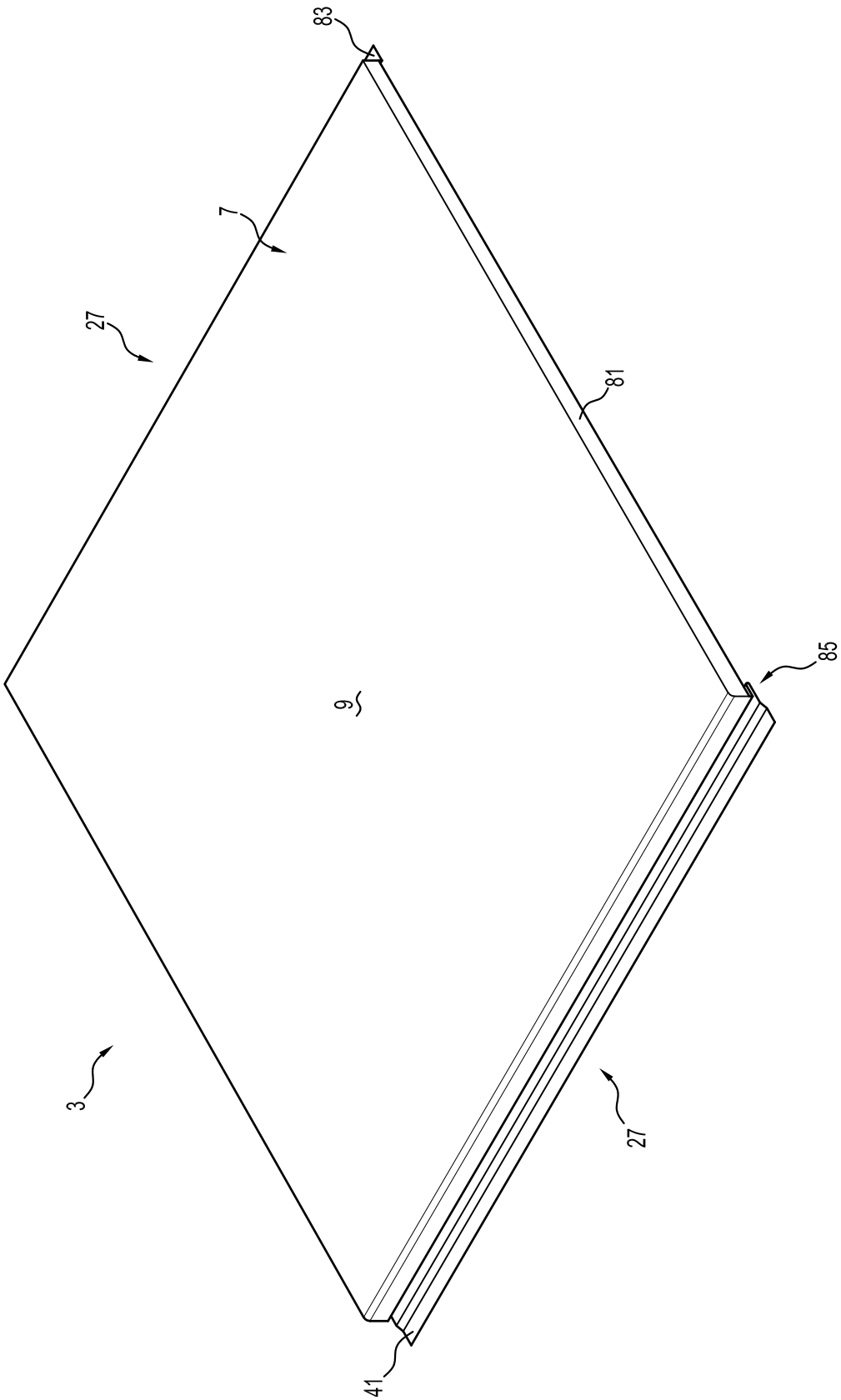

Figure 23

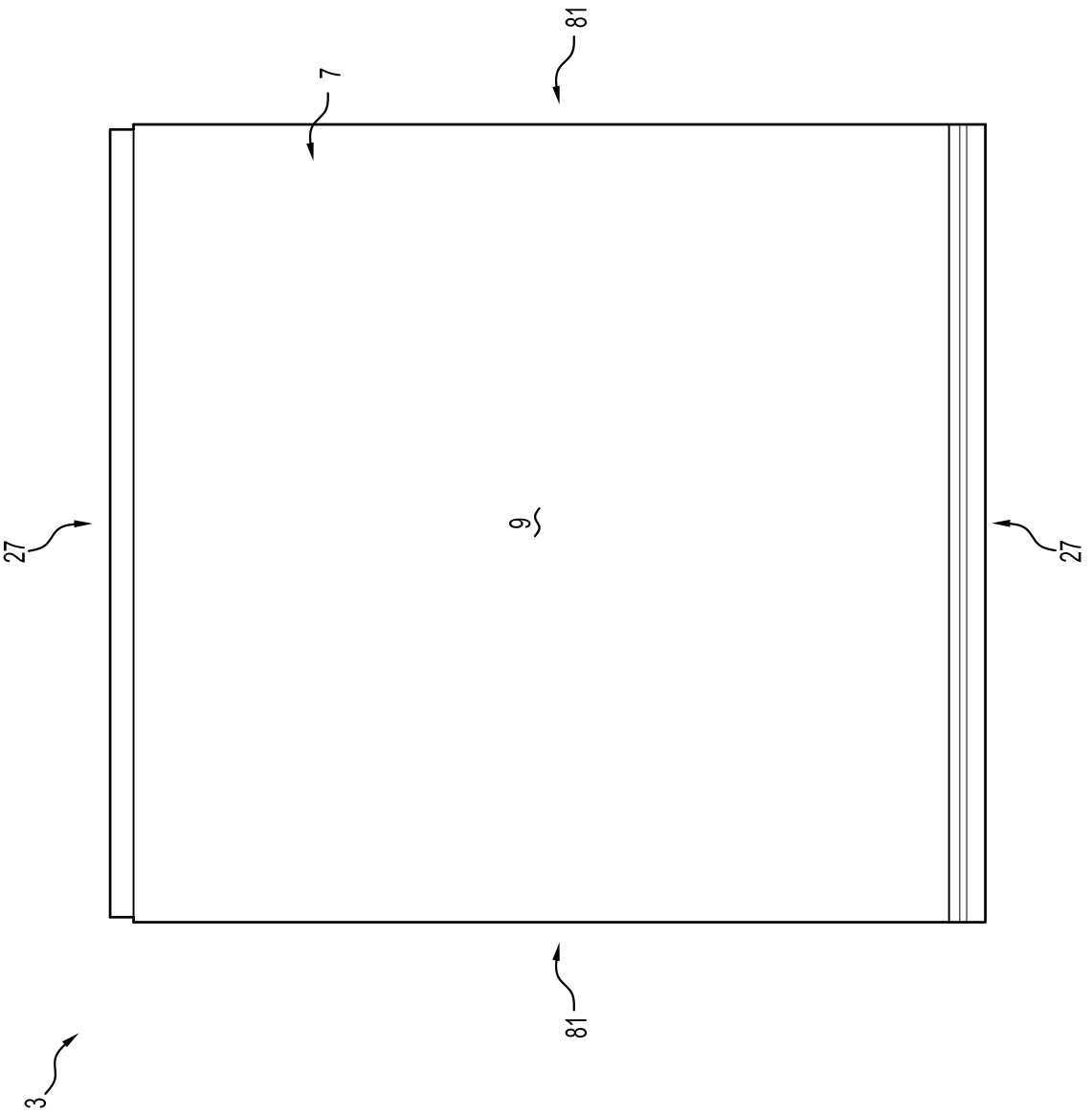

Figure 24

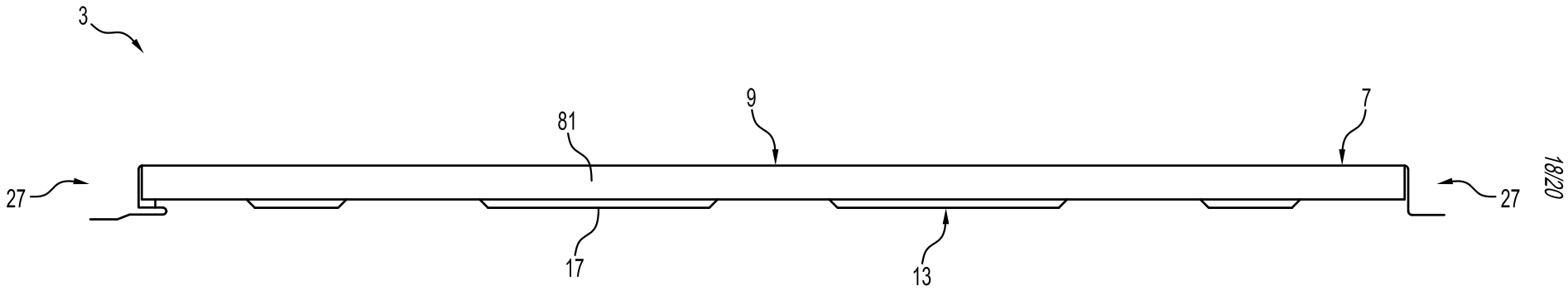

Figure 25

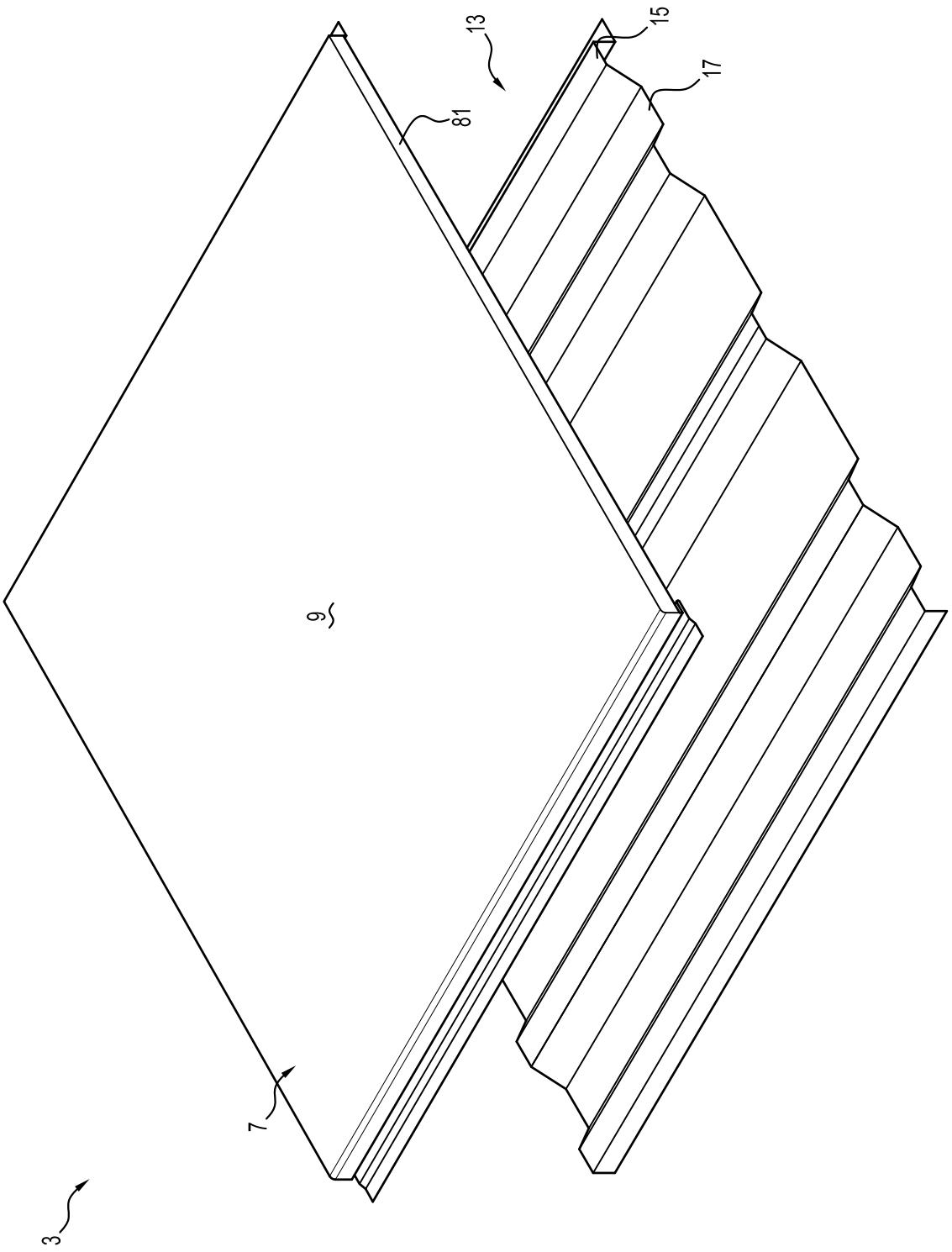

Figure 26

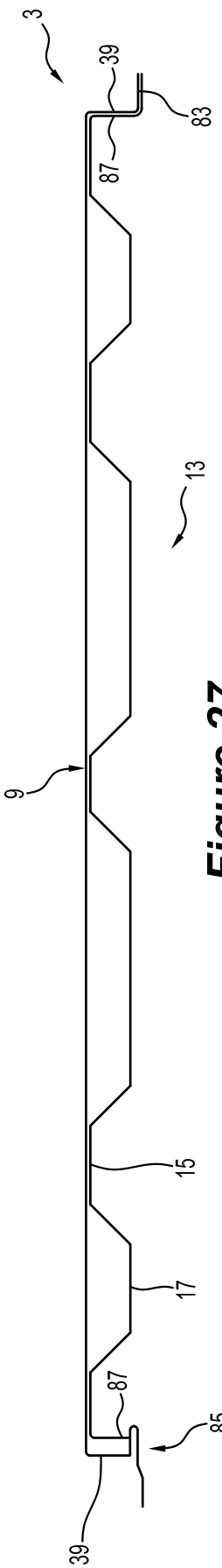

Figure 27

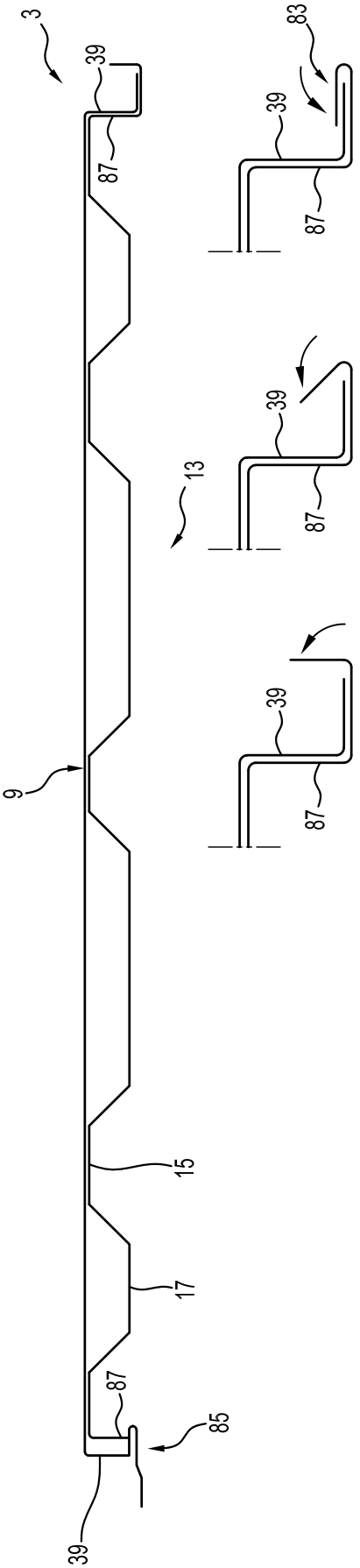

Figure 28

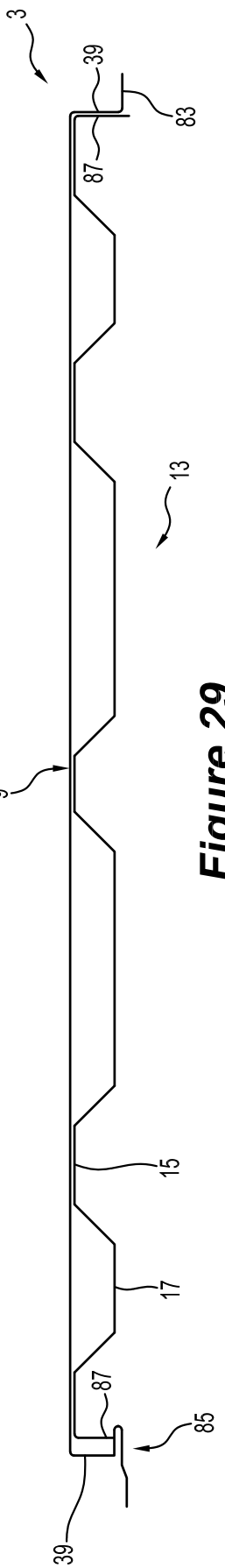

Figure 29