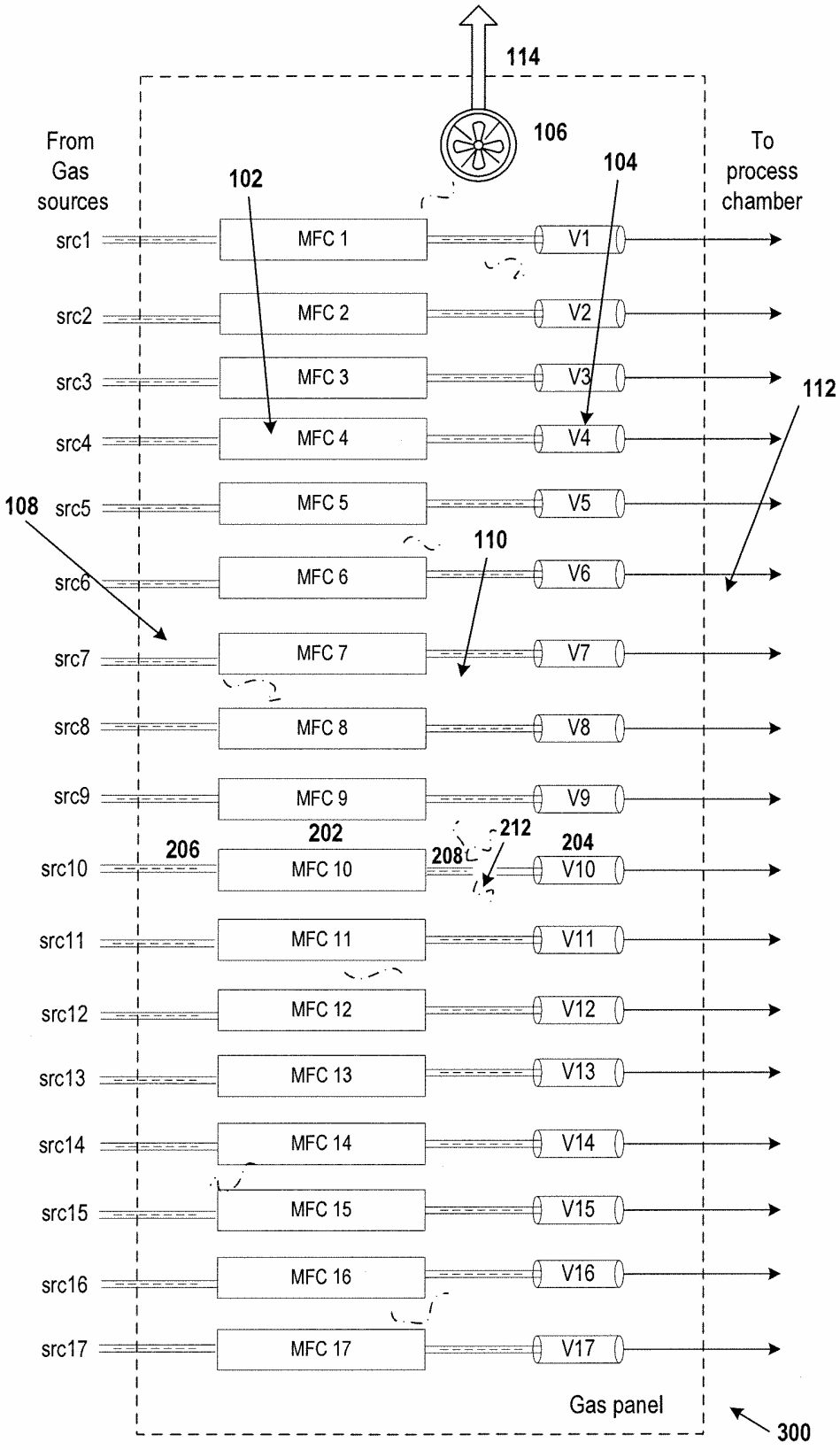
114
106
From Gas sources
To process chamber
102
104
112
108
110
206
202
208
212
204
src1
src2
src3
src4
src5
src6
src7
src8
src9
src10
src11
src12
src13
src14
src15
src16
src17
MFC 1
MFC 2
MFC 3
MFC 4
MFC 5
MFC 6
MFC 7
MFC 8
MFC 9
MFC 10
MFC 11
MFC 12
MFC 13
MFC 14
MFC 15
MFC 16
MFC 17
V1
V2
V3
V4
V5
V6
V7
V8
V9
V10
V11
V12
V13
V14
V15
V16
V17
Gas panel
300

FIG. ~~4~~ 3

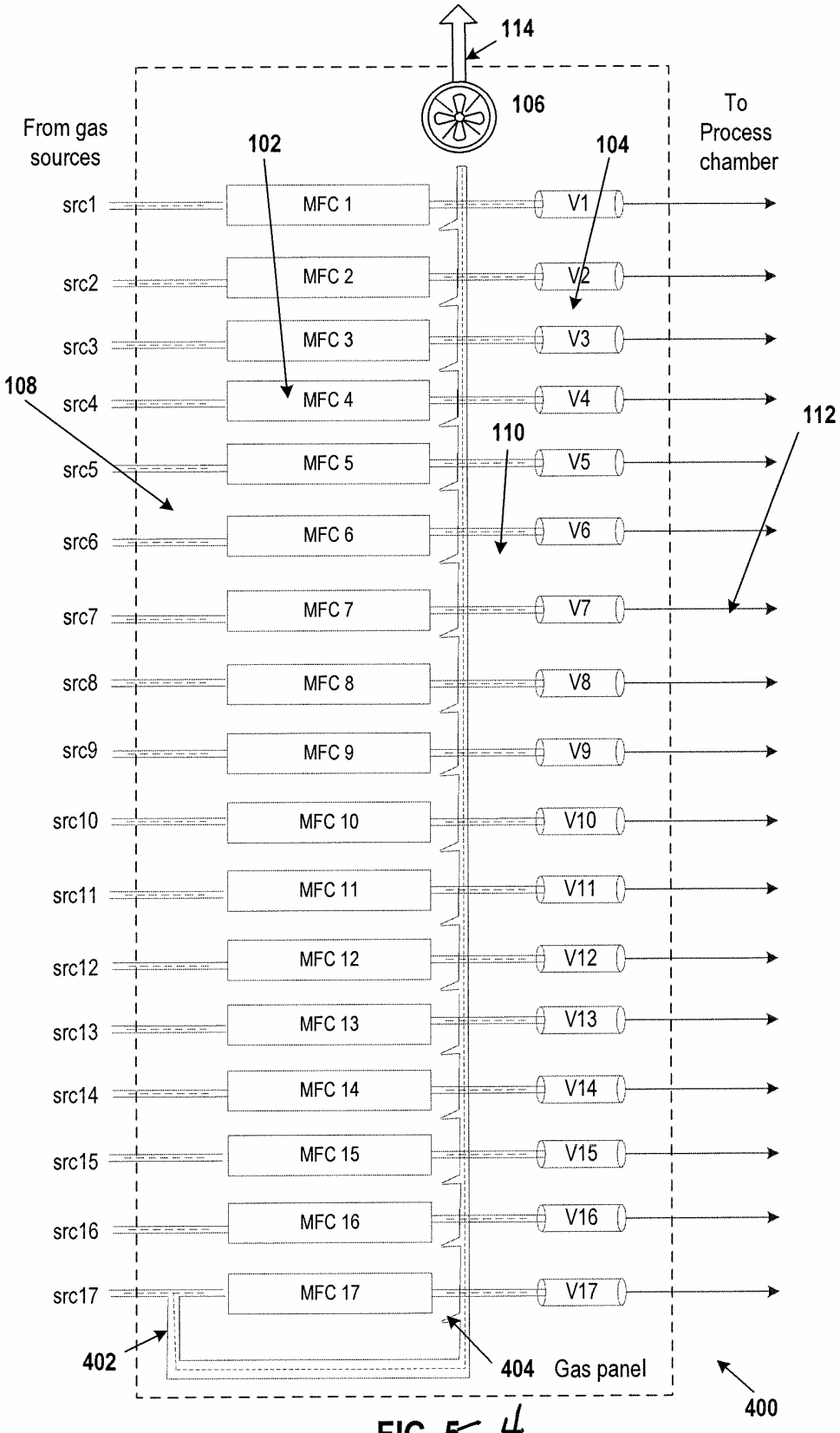
114
106
From gas sources
To Process chamber
102
104
src1
src2
src3
src4
src5
src6
src7
src8
src9
src10
src11
src12
src13
src14
src15
src16
src17
MFC 1
MFC 2
MFC 3
MFC 4
MFC 5
MFC 6
MFC 7
MFC 8
MFC 9
MFC 10
MFC 11
MFC 12
MFC 13
MFC 14
MFC 15
MFC 16
MFC 17
V1
V2
V3
V4
V5
V6
V7
V8
V9
V10
V11
V12
V13
V14
V15
V16
V17
108
110
112
402
404
Gas panel
400

FIG. ~~5~~ 4

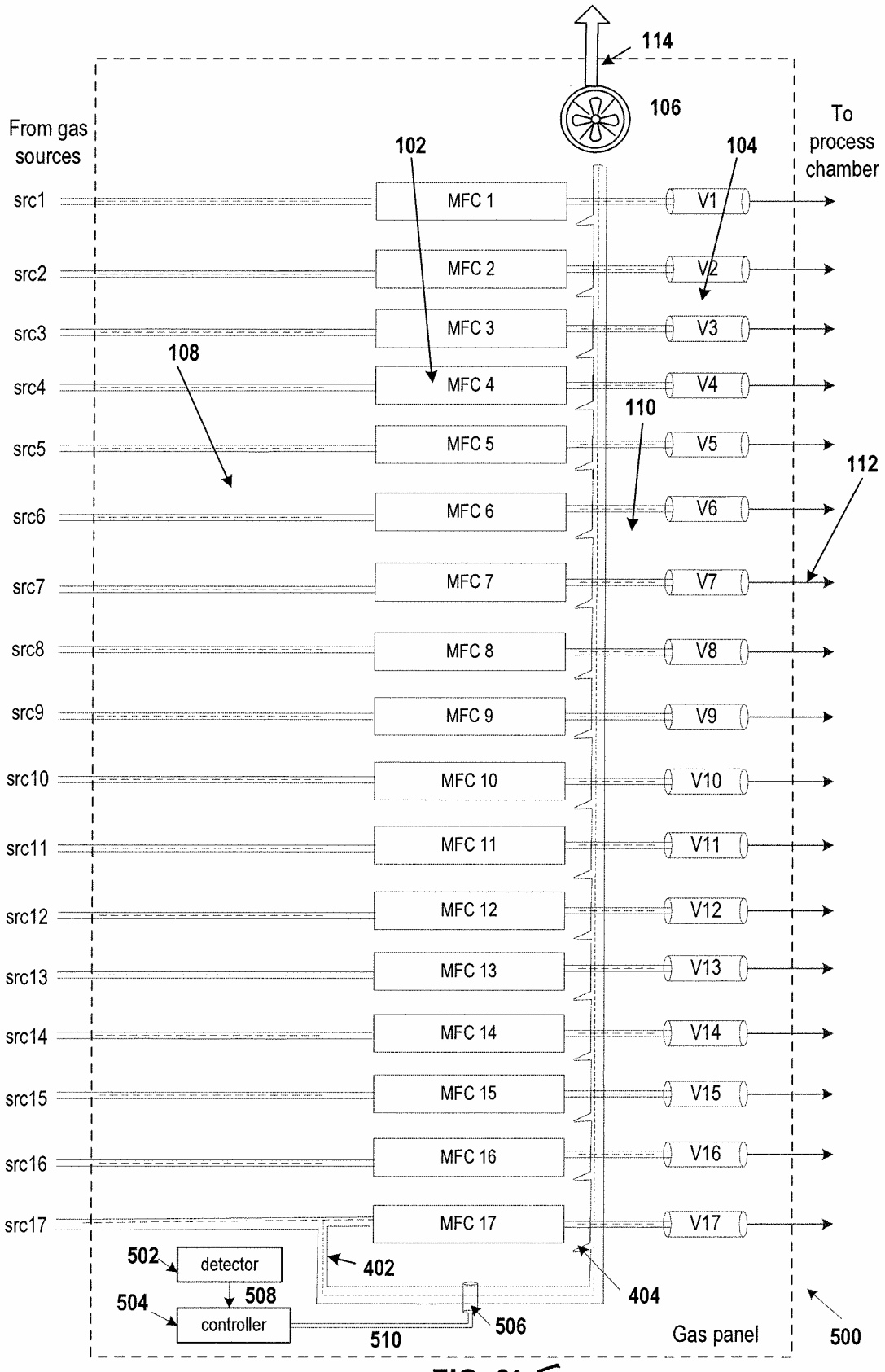
114
106
From gas sources
To process chamber
102
104
src1
MFC 1
V1
src2
MFC 2
V2
src3
MFC 3
V3
108
src4
MFC 4
V4
110
src5
MFC 5
V5
112
src6
MFC 6
V6
src7
MFC 7
V7
src8
MFC 8
V8
src9
MFC 9
V9
src10
MFC 10
V10
src11
MFC 11
V11
src12
MFC 12
V12
src13
MFC 13
V13
src14
MFC 14
V14
src15
MFC 15
V15
src16
MFC 16
V16
src17
MFC 17
V17
502
detector
402
404
504
508
controller
506
510
Gas panel
500

FIG. ~~3~~ 5