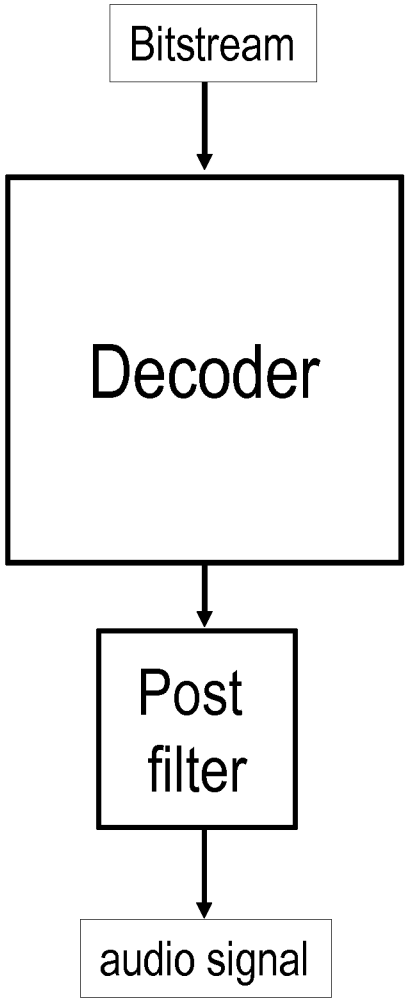

Fig. 1 (prior art)

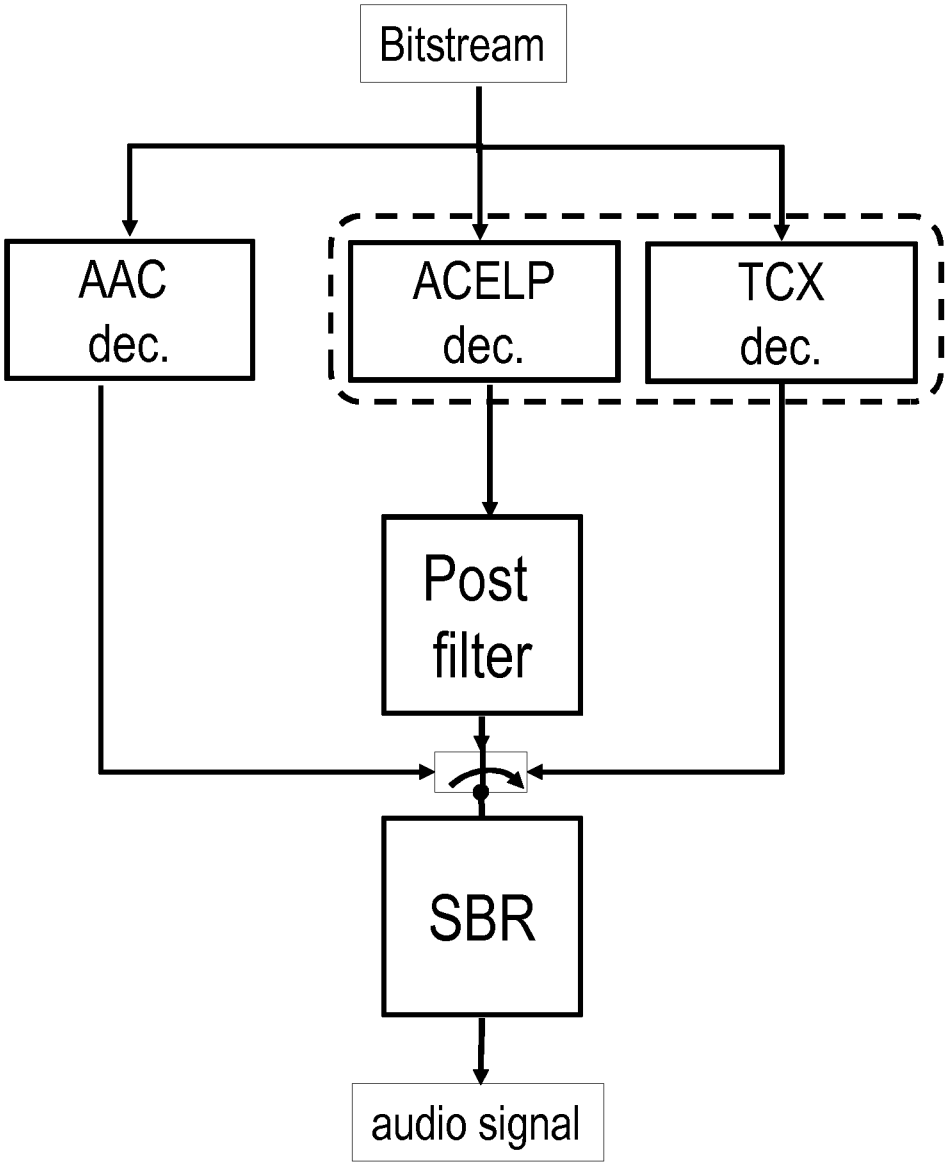

Fig. 2
(prior art)

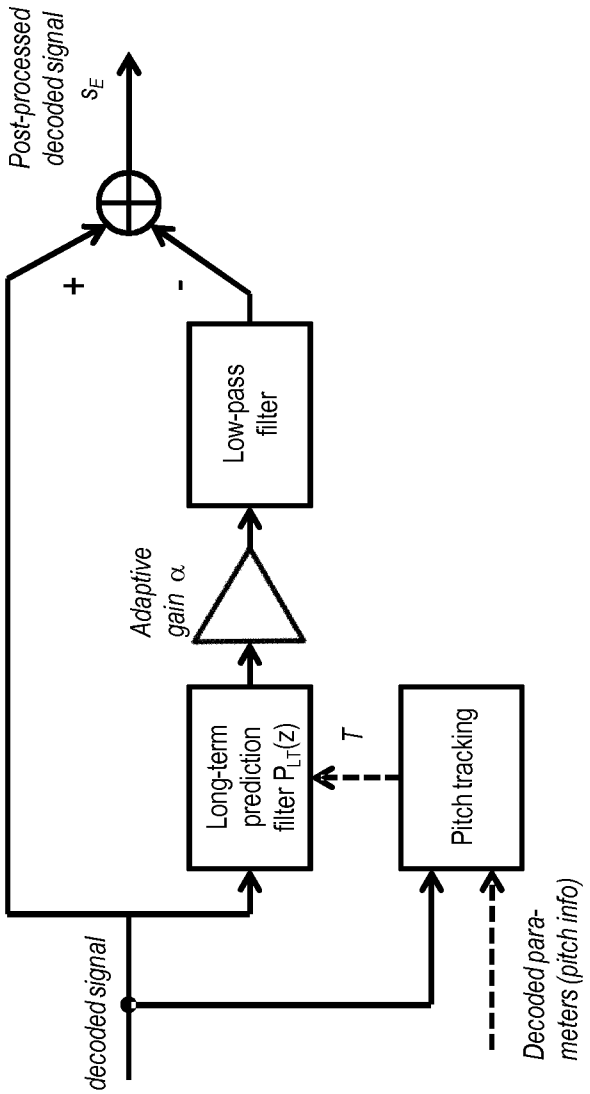
Post-processed decoded signal
s_E
+
-
Low-pass filter
Adaptive gain α
Long-term prediction filter $P_{LT}(z)$
T
Pitch tracking
decoded signal
Decoded para-meters (pitch info)

Fig. 3

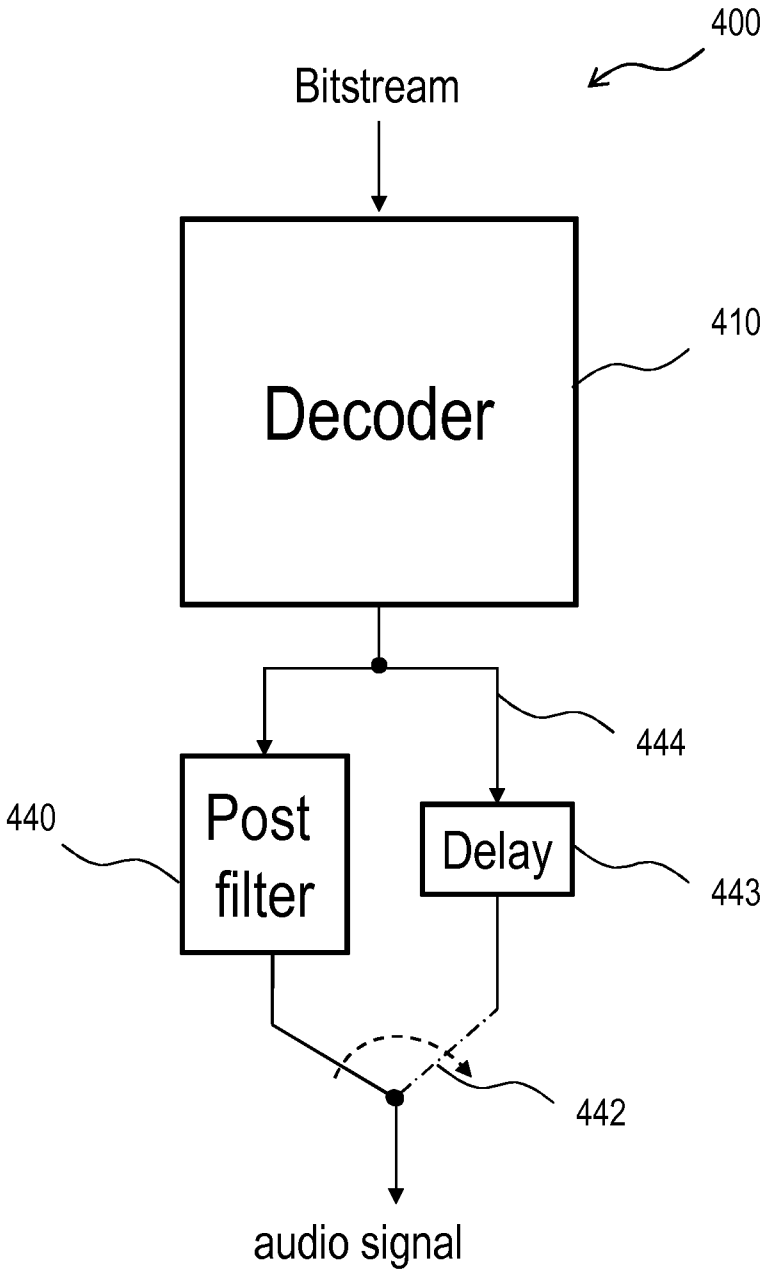
400
Bitstream
Decoder
410
444
440
Post filter
Delay
443
442
audio signal

Fig. 4

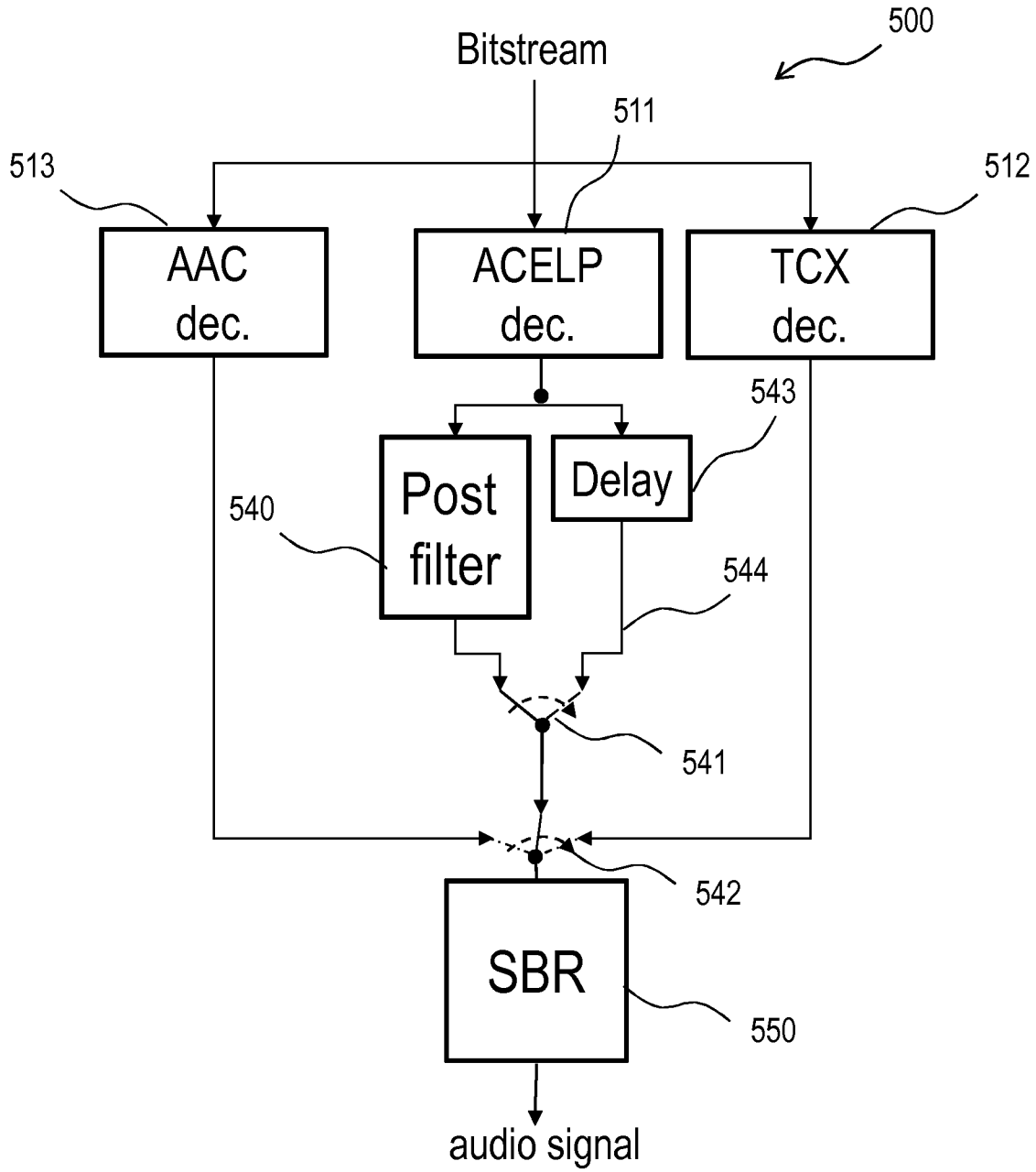
500
Bitstream
511
513
512
AAC dec.
ACELP dec.
TCX dec.
543
Post filter
Delay
540
544
541
542
SBR
550
audio signal

Fig. 5

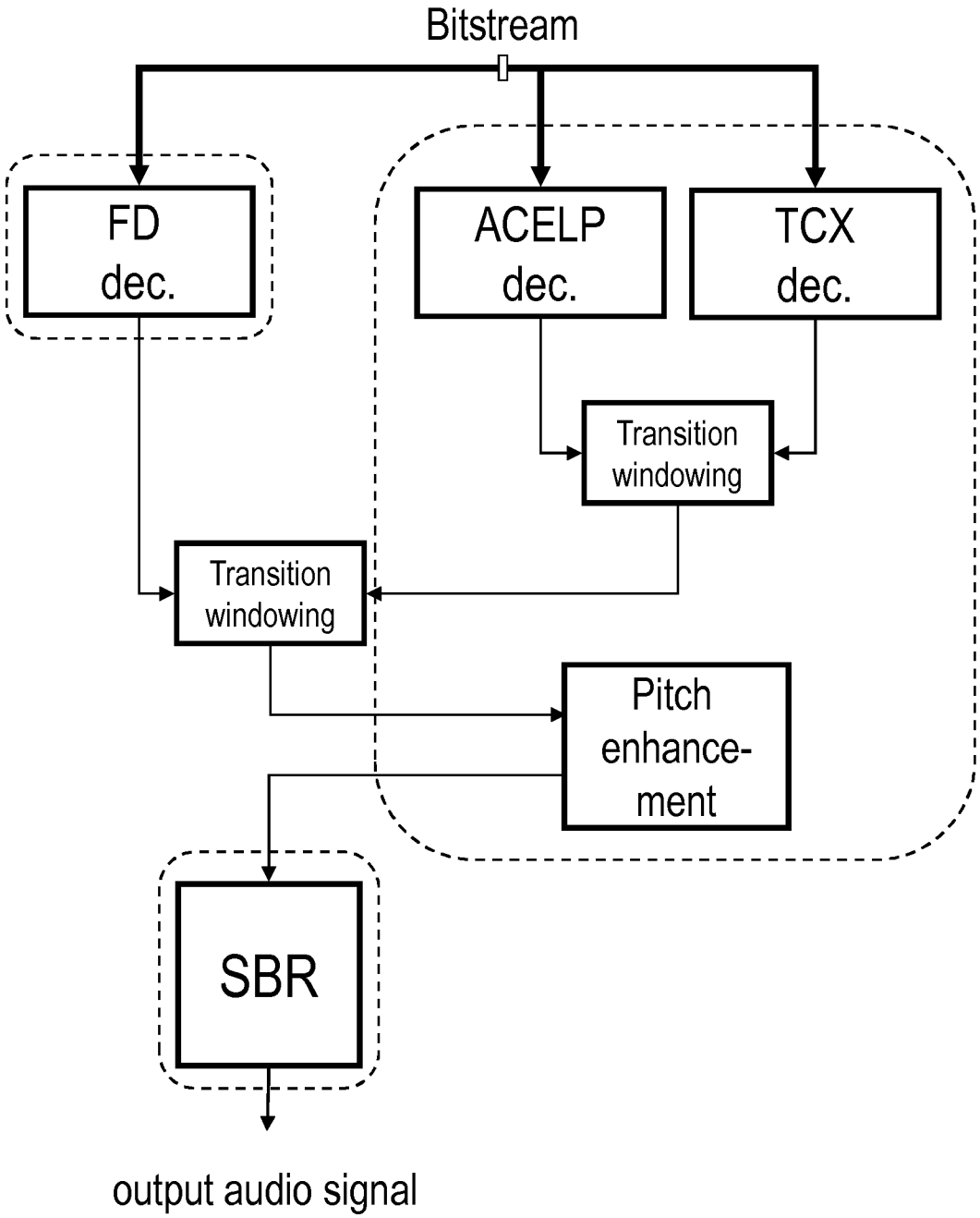

Fig. 6 (prior art)

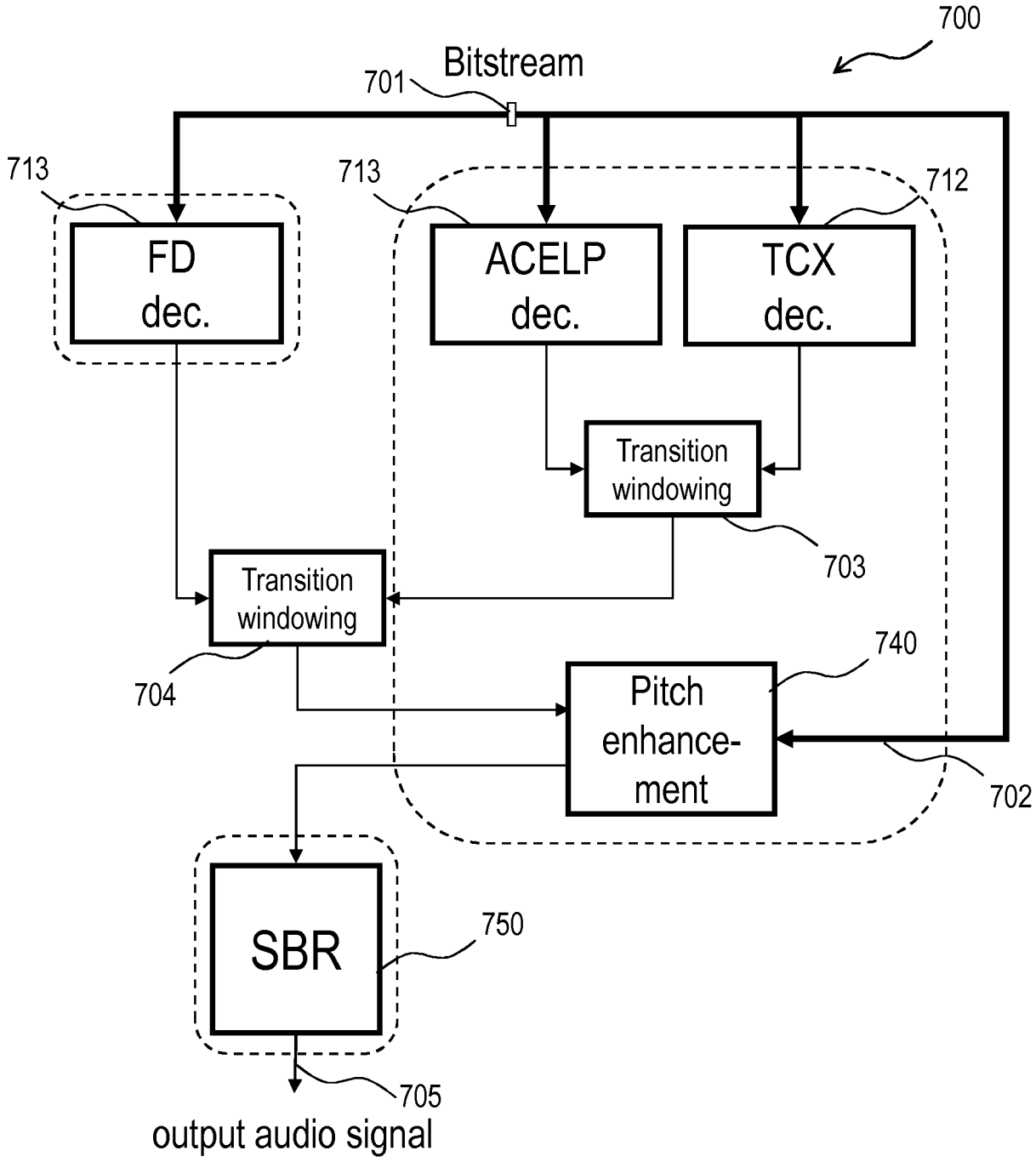
700
Bitstream
701
713
713
712
FD
dec.
ACELP
dec.
TCX
dec.
Transition
windowing
703
Transition
windowing
704
740
Pitch
enhance-
ment
702
SBR
750
705
output audio signal

Fig. 7

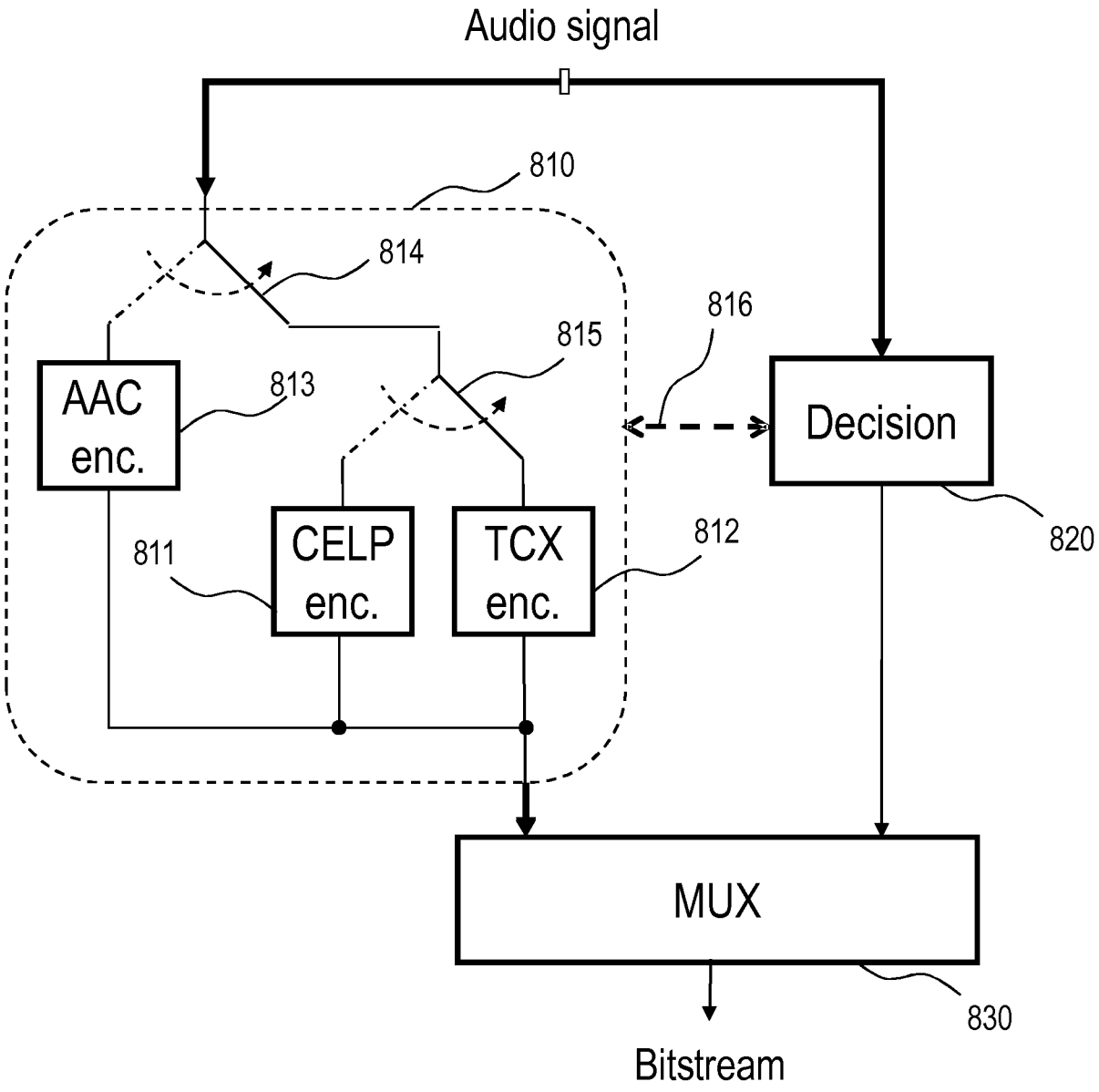
Audio signal
810
814
816
815
AAC enc.
813
Decision
820
811
CELP enc.
TCX enc.
812
MUX
830
Bitstream

Fig. 8

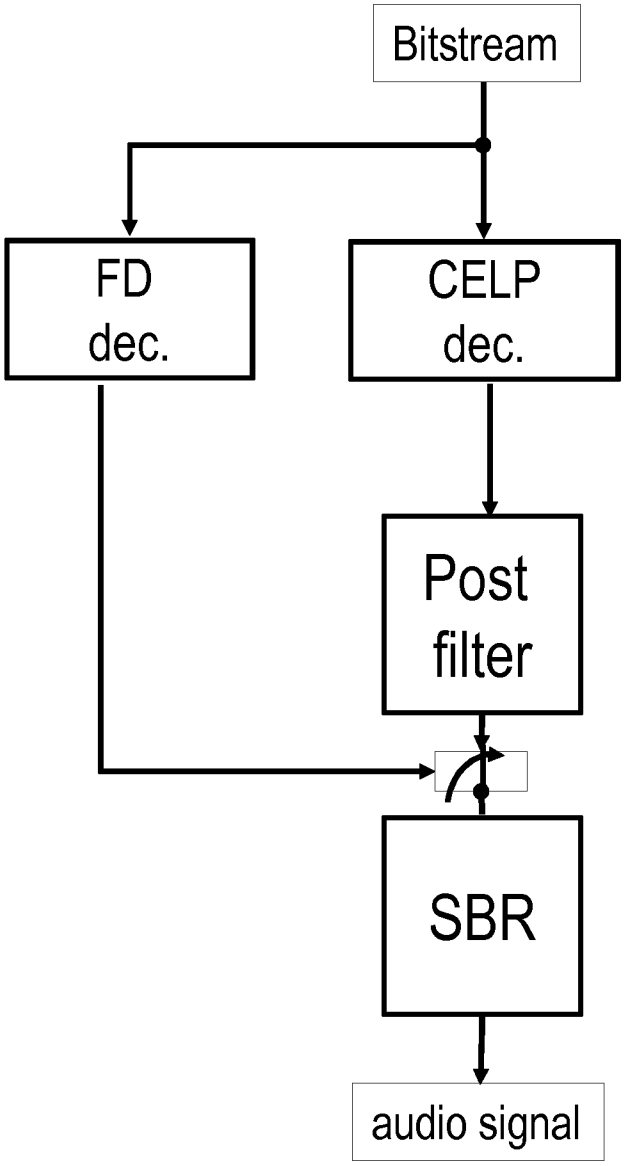

Fig. 9
(prior art)

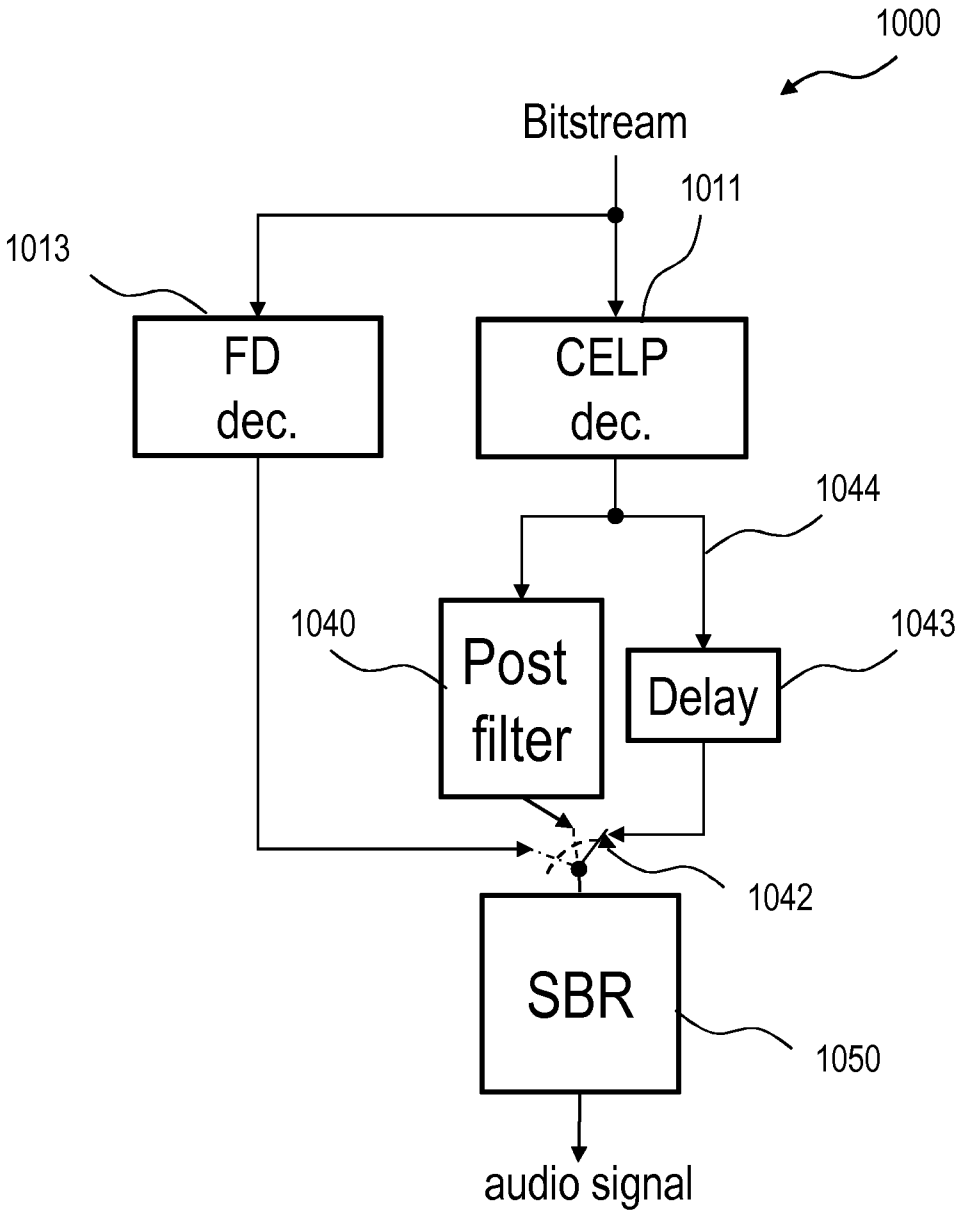
1000
Bitstream
1011
1013
FD
dec.
CELP
dec.
1044
1040
Post
filter
Delay
1043
1042
SBR
1050
audio signal

Fig. 10

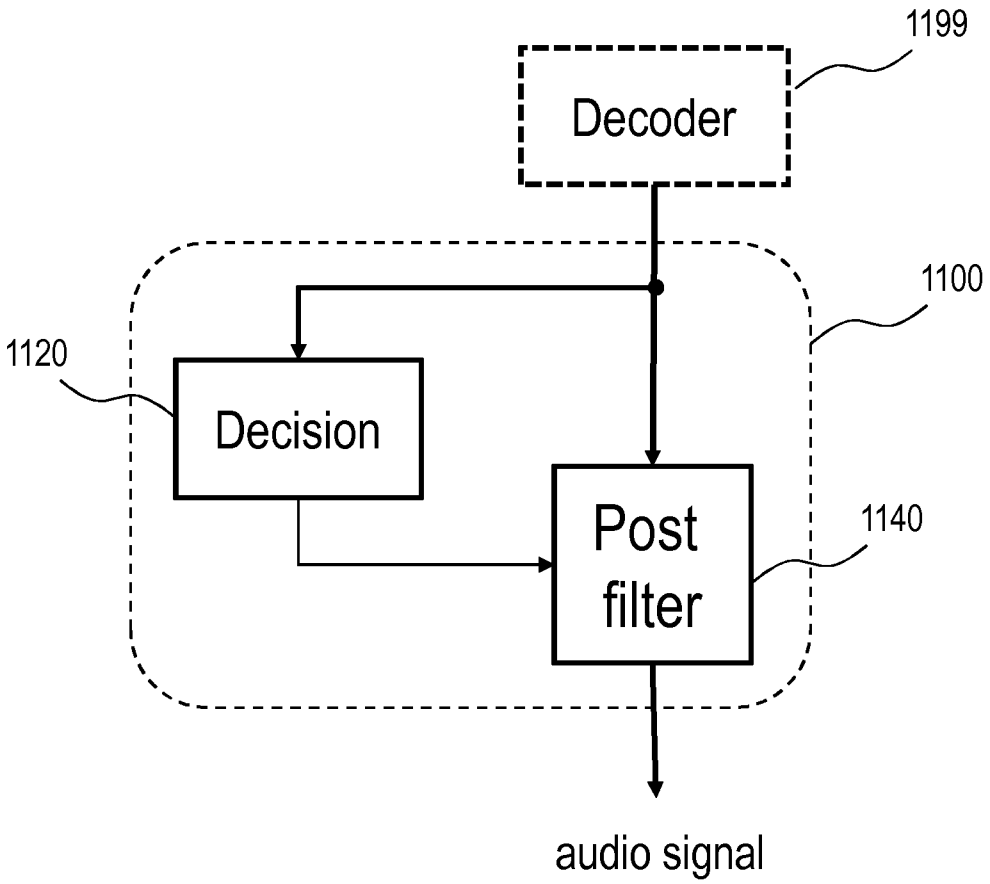
1199
Decoder
1100
1120
Decision
Post
filter
1140
audio signal

Fig. 11