Fig.1

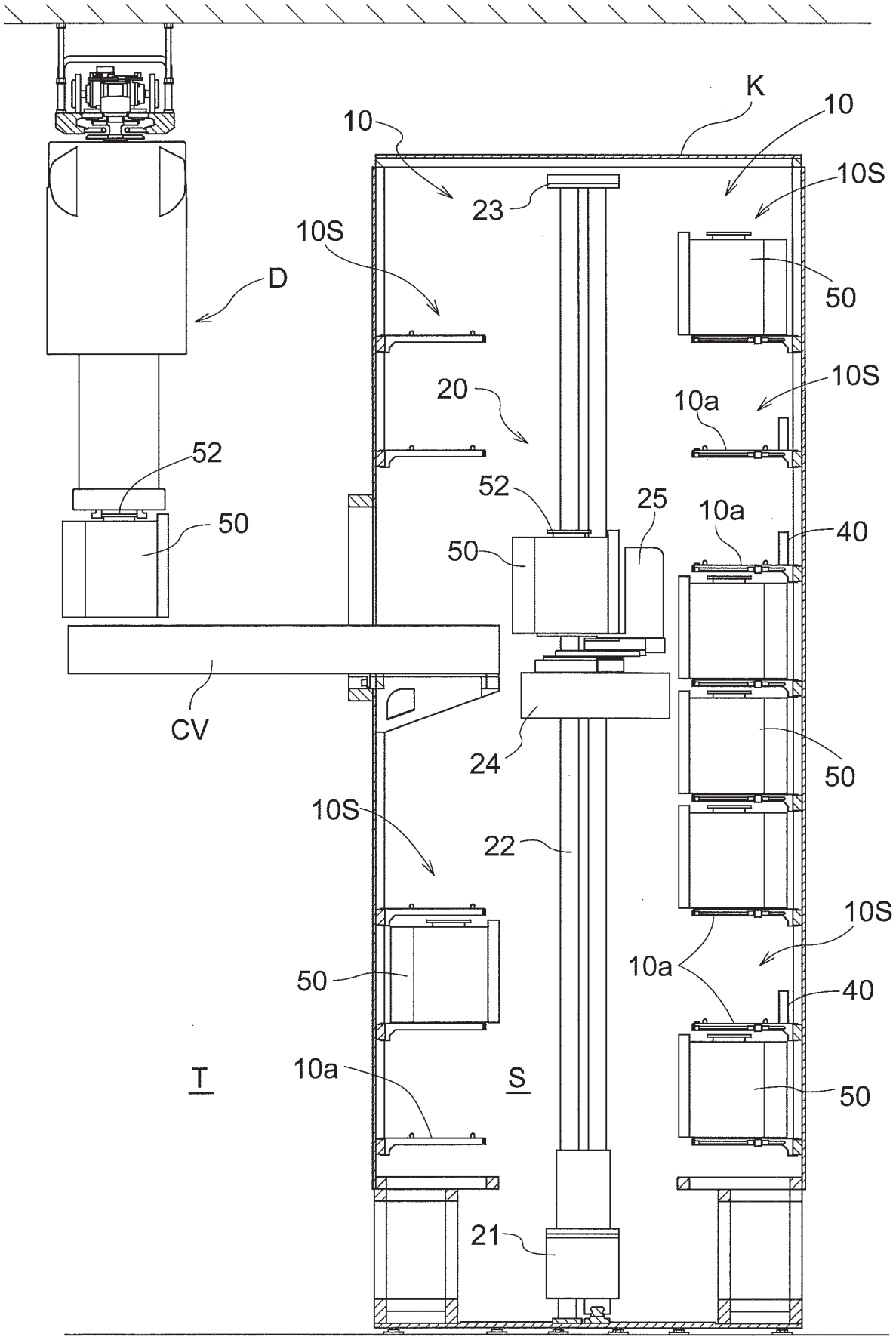
K
10
10
10S
23
10S
50
D
10S
20
10a
52
52
25
10a
40
50
50
CV
24
50
10S
22
10S
10a
50
40
T
10a
S
50
21

Fig.2

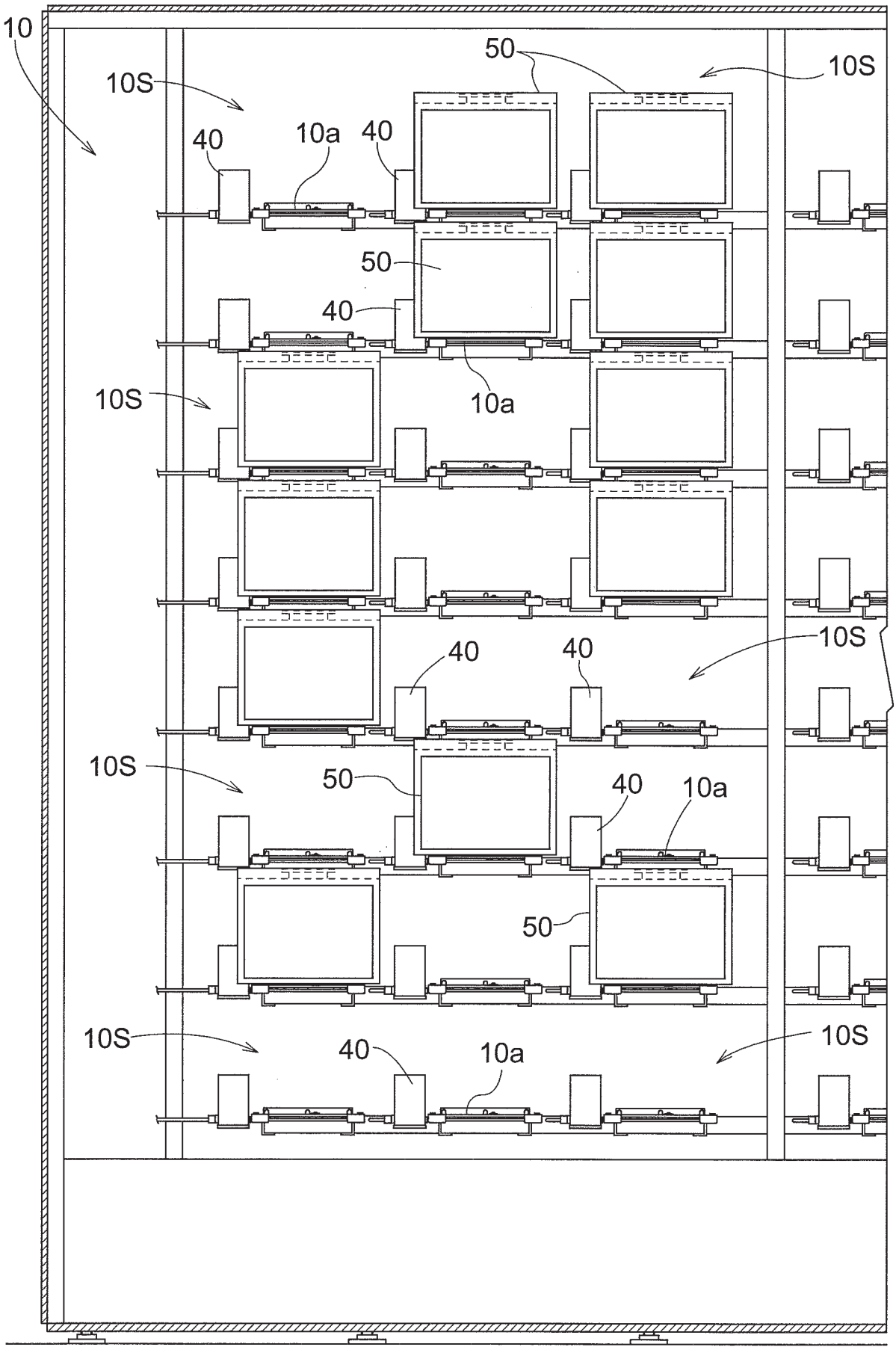
10
10S
50
10S
40
10a
40
50
40
10S
10a
10S
40
40
10S
10S
50
40
10a
50
10S
40
10a
10S

Fig.3

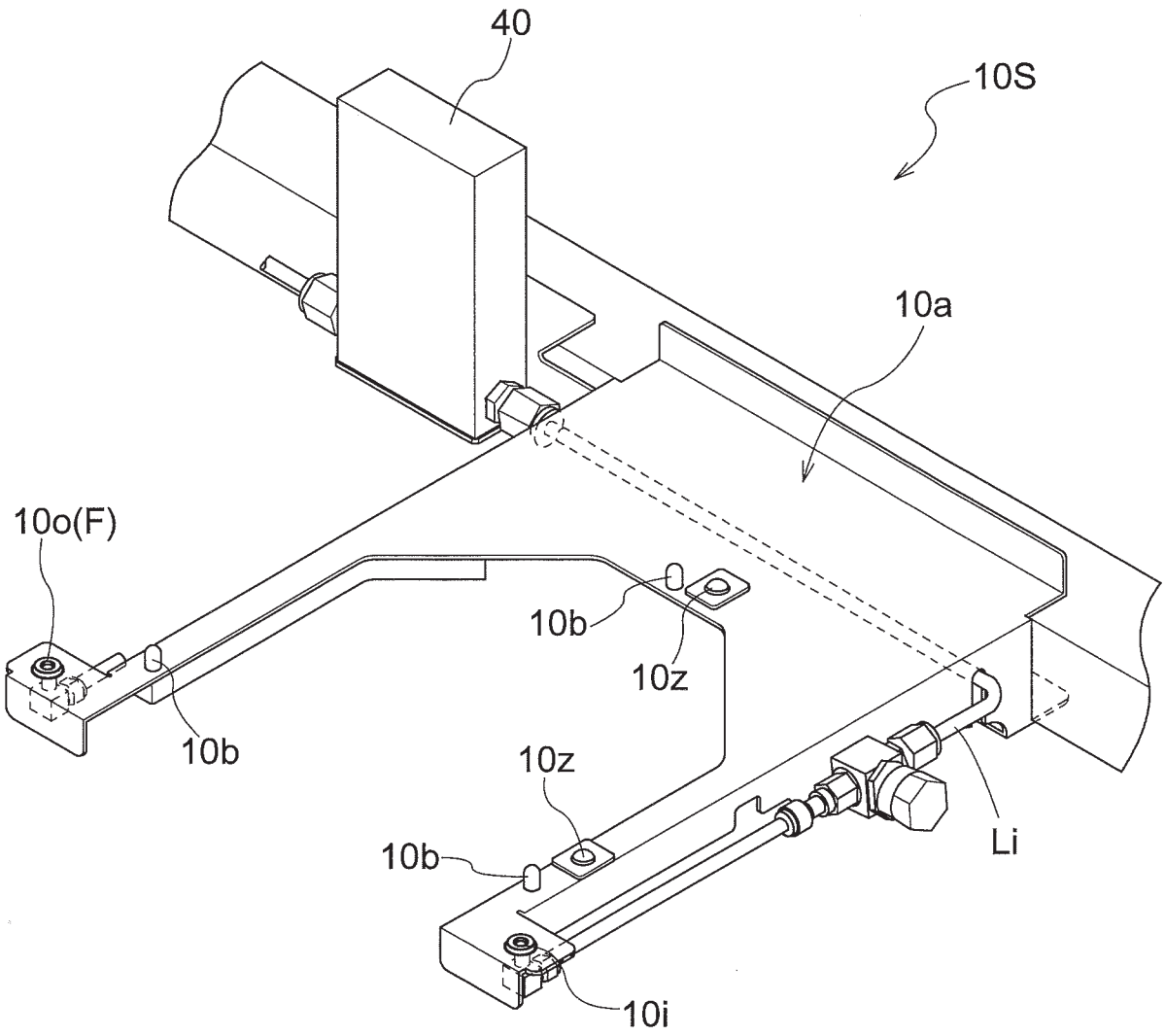

Fig.4

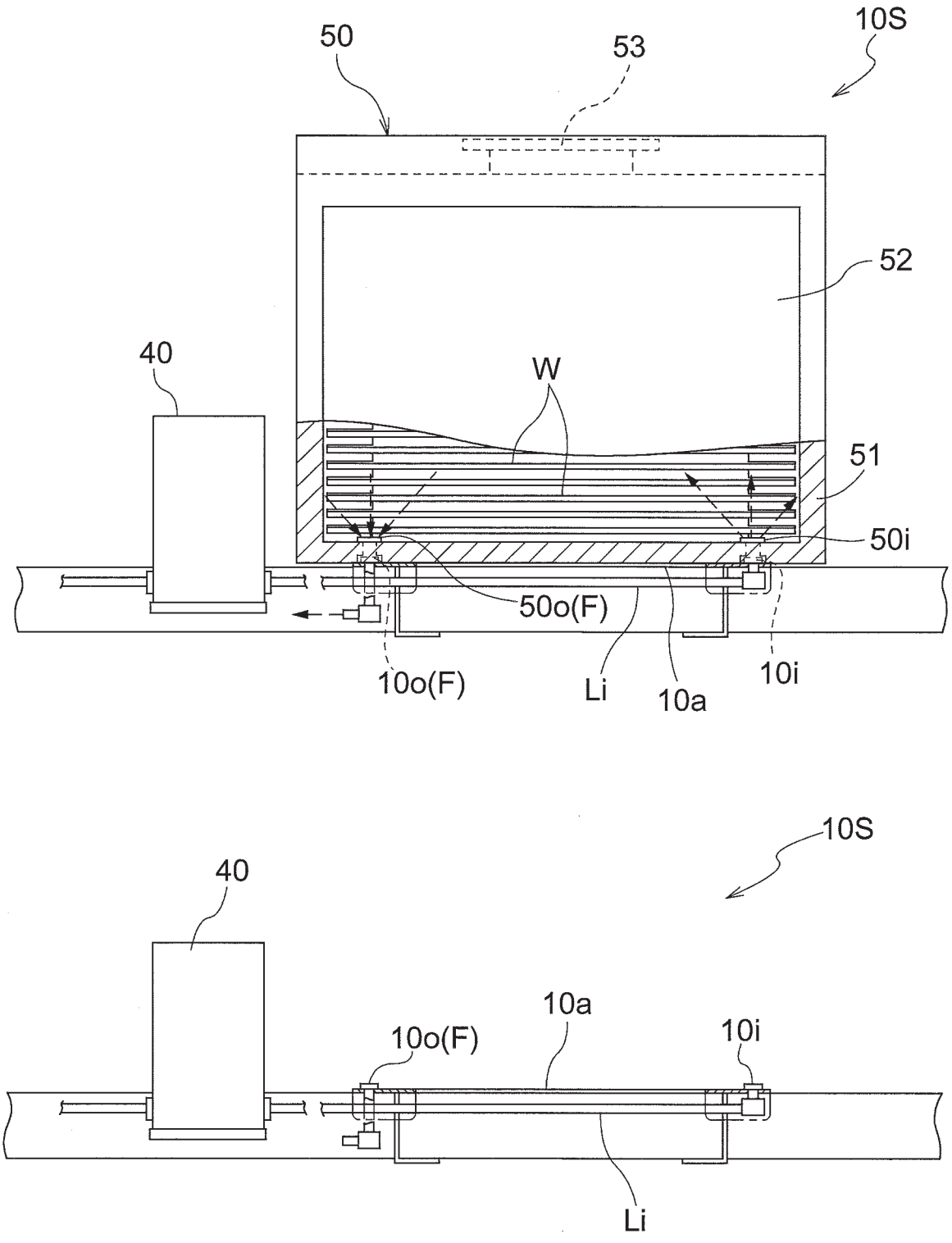
50
53
10S
52
40
W
51
50i
50o(F)
10o(F)
Li
10a
10i
10S
40
10a
10o(F)
10i
Li

Fig.5

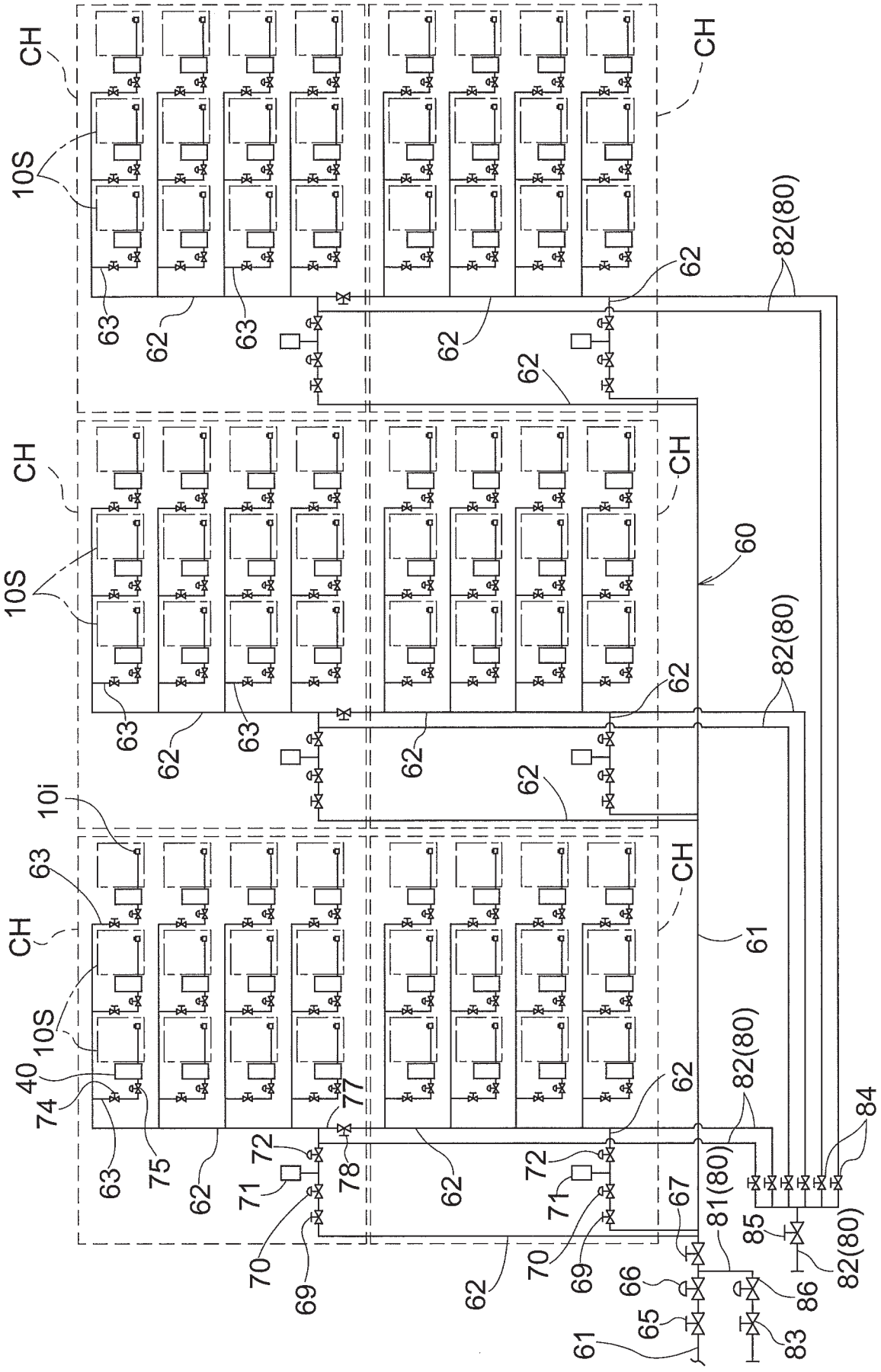
CH
10S
10i
40
74
75
63
62
71
72
77
78
70
69
61
60
67
66
65
81(80)
82(80)
83
84
85
86

Fig.6

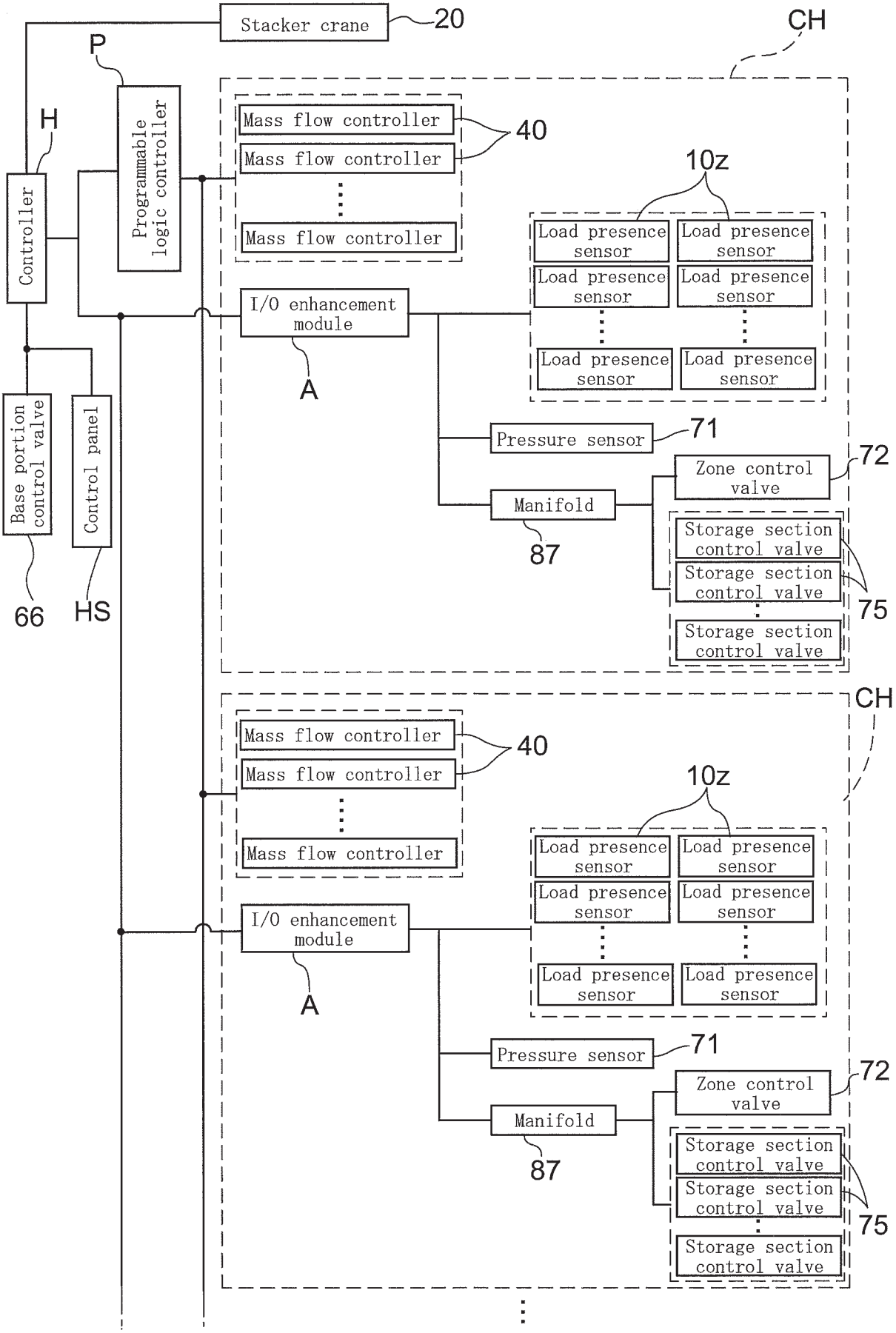
Stacker crane
20
CH
P
H
Programmable logic controller
Controller
Mass flow controller
Mass flow controller
Mass flow controller
40
10z
Load presence sensor
Load presence sensor
Load presence sensor
Load presence sensor
Load presence sensor
Load presence sensor
I/O enhancement module
A
Pressure sensor
71
Zone control valve
72
Manifold
87
Storage section control valve
Storage section control valve
Storage section control valve
75
Base portion control valve
Control panel
66
HS
CH
Mass flow controller
Mass flow controller
Mass flow controller
40
10z
Load presence sensor
Load presence sensor
Load presence sensor
Load presence sensor
Load presence sensor
Load presence sensor
I/O enhancement module
A
Pressure sensor
71
Zone control valve
72
Manifold
87
Storage section control valve
Storage section control valve
Storage section control valve
75

Fig.7

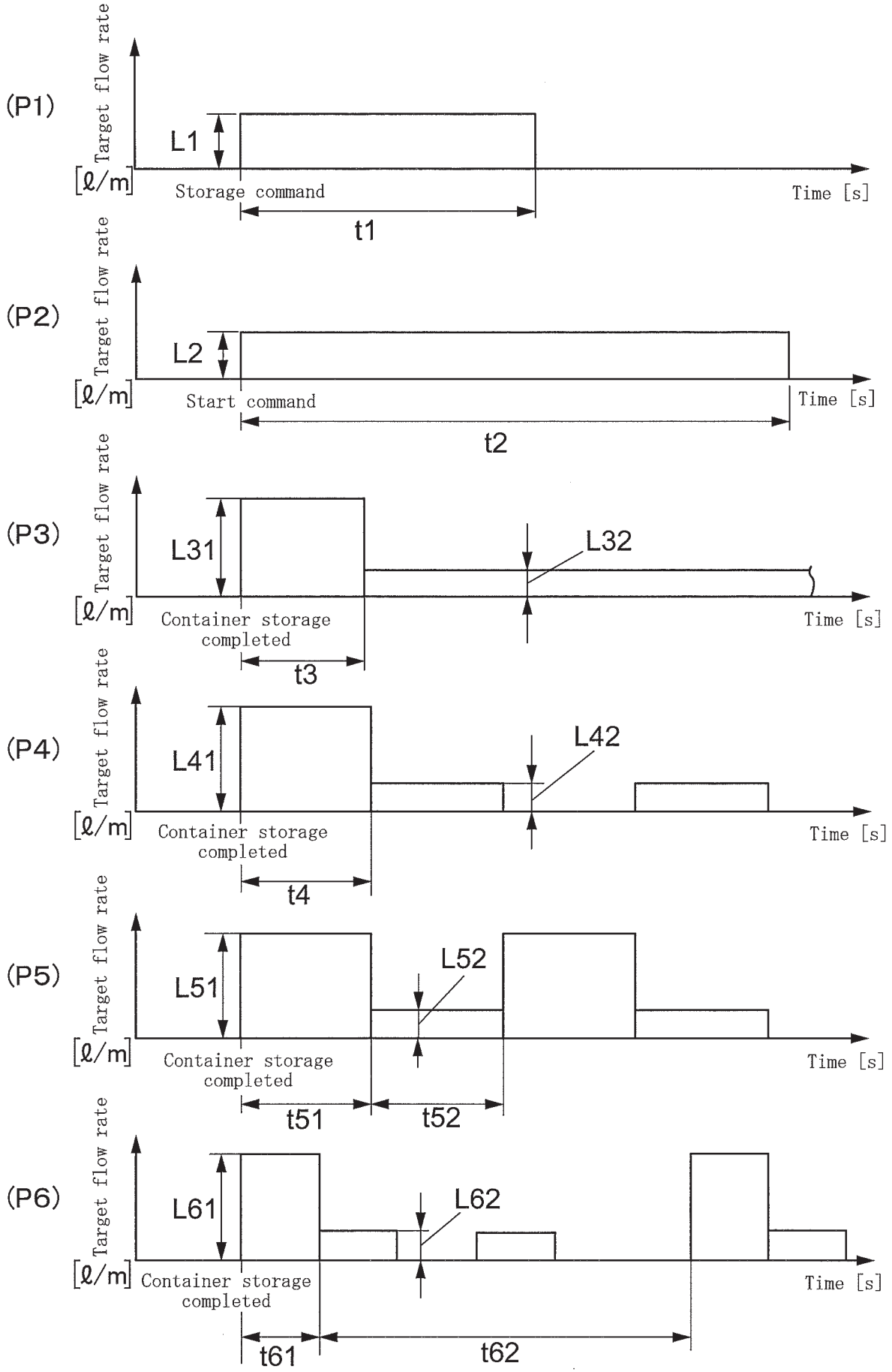
(P1)
Target flow rate
[ℓ/m]
L1
Storage command
Time [s]
t1
(P2)
Target flow rate
[ℓ/m]
L2
Start command
Time [s]
t2
(P3)
Target flow rate
[ℓ/m]
L31
L32
Container storage completed
Time [s]
t3
(P4)
Target flow rate
[ℓ/m]
L41
L42
Container storage completed
Time [s]
t4
(P5)
Target flow rate
[ℓ/m]
L51
L52
Container storage completed
Time [s]
t51
t52
(P6)
Target flow rate
[ℓ/m]
L61
L62
Container storage completed
Time [s]
t61
t62

Fig.8

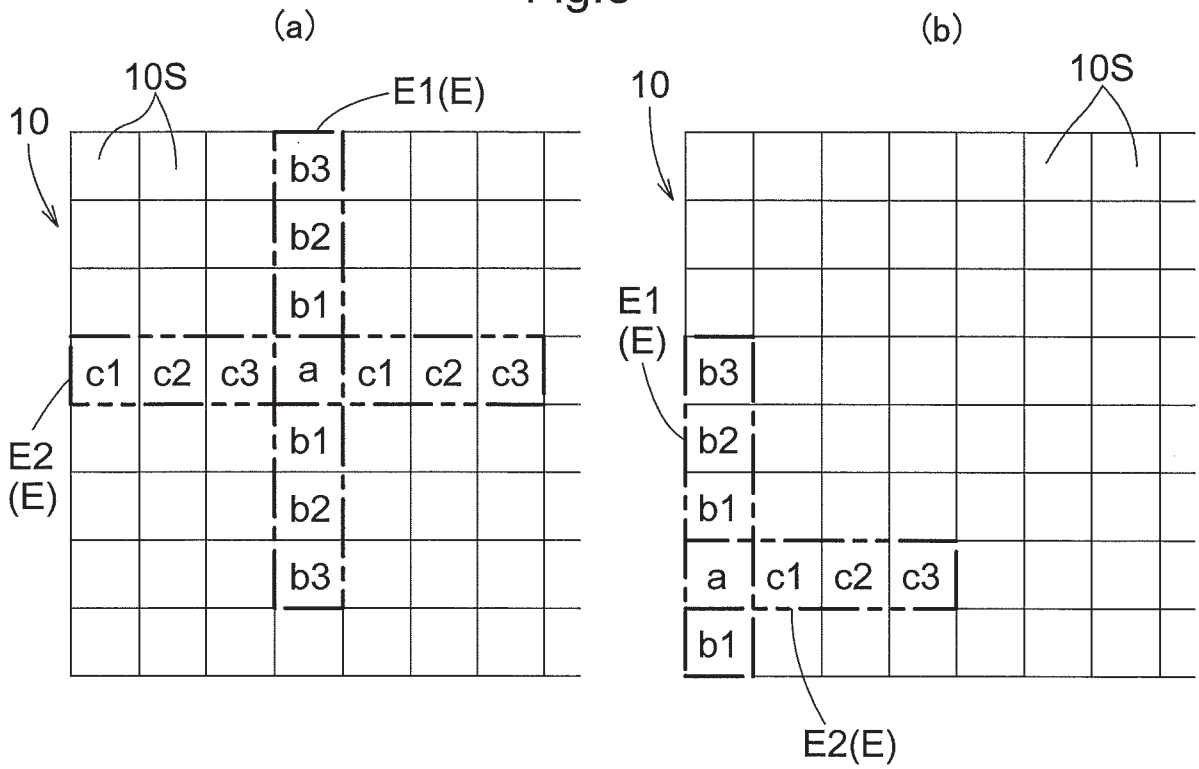
(a)
10S
E1(E)
10
b3
b2
b1
c1 c2 c3 a c1 c2 c3
E2
(E)
b1
b2
b3
(b)
10
10S
E1
(E)
b3
b2
b1
a c1 c2 c3
b1
E2(E)

Fig.9

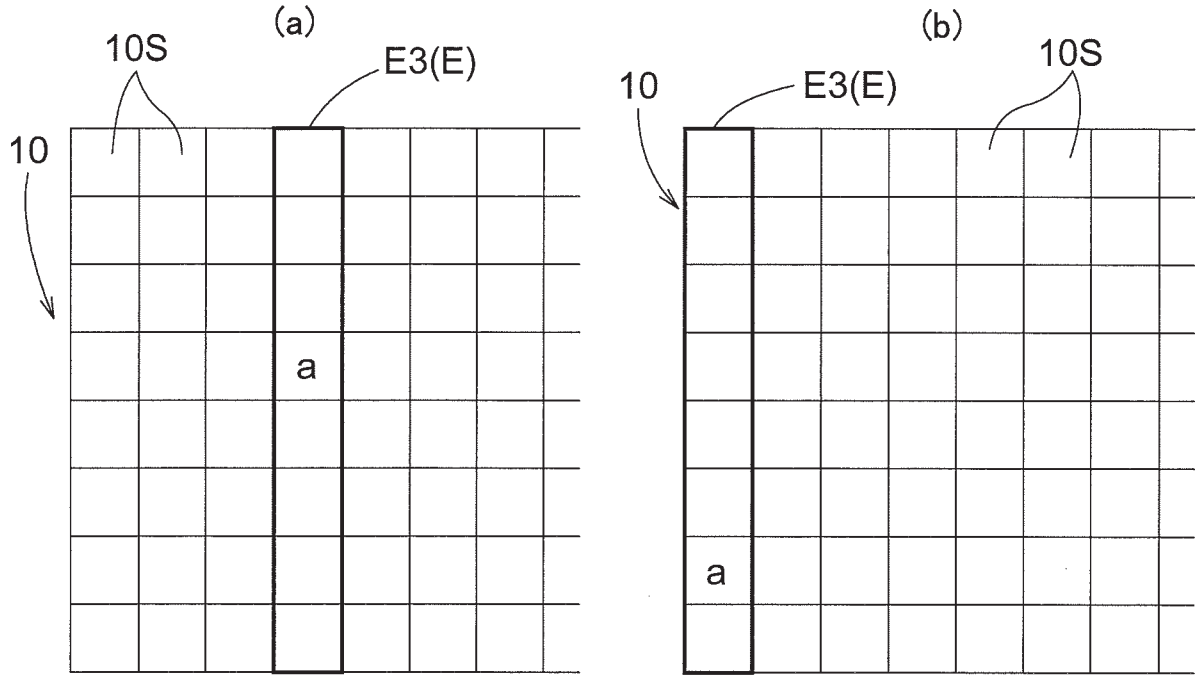
(a)
10S
E3(E)
10
a
(b)
10
E3(E)
10S
a

Fig.10

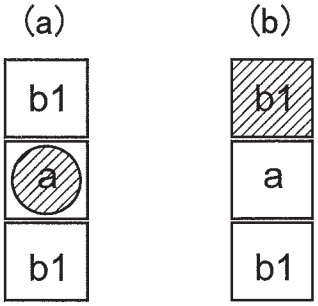

Fig.11

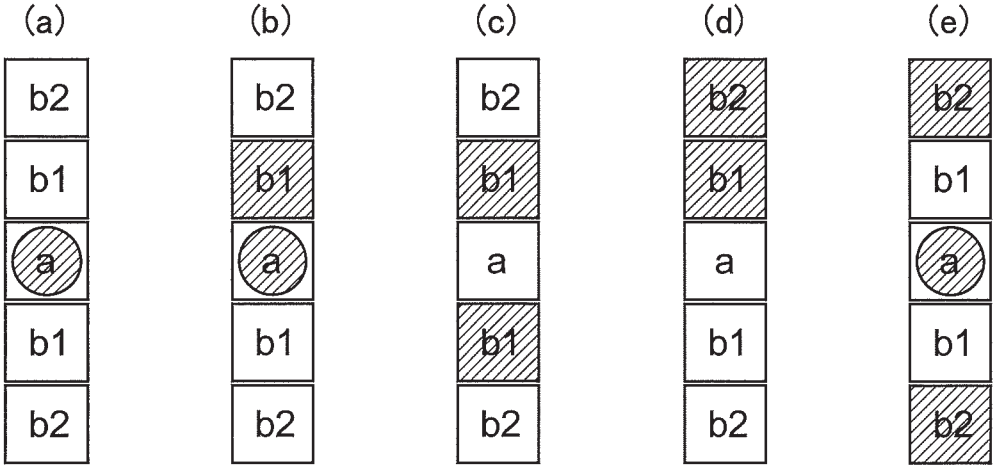

Fig.12

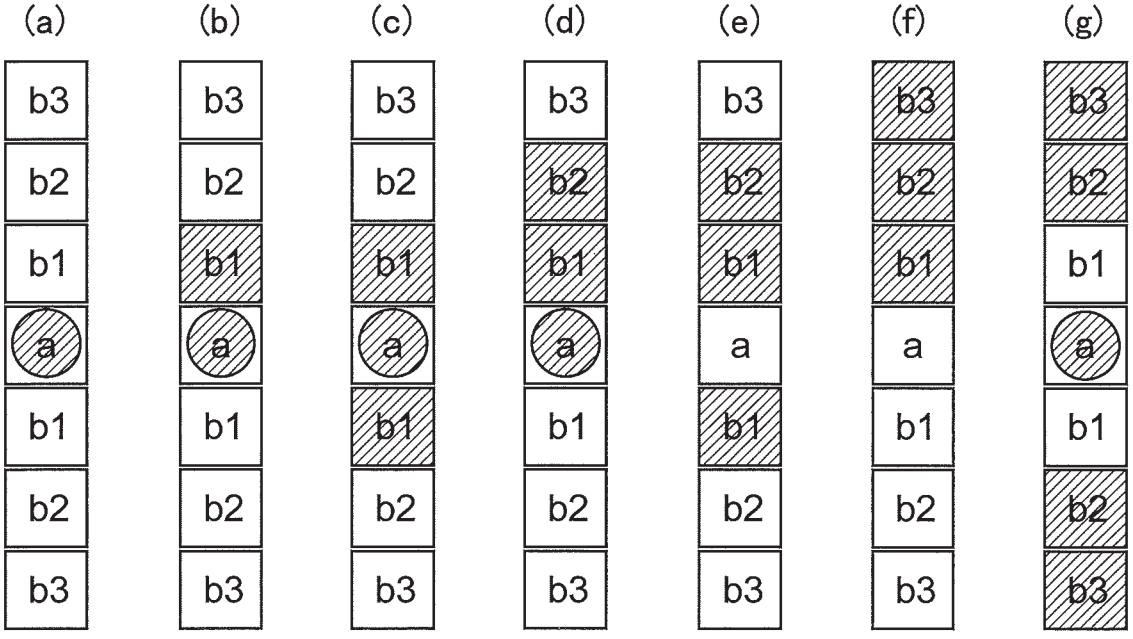

Fig.13

Fig.14

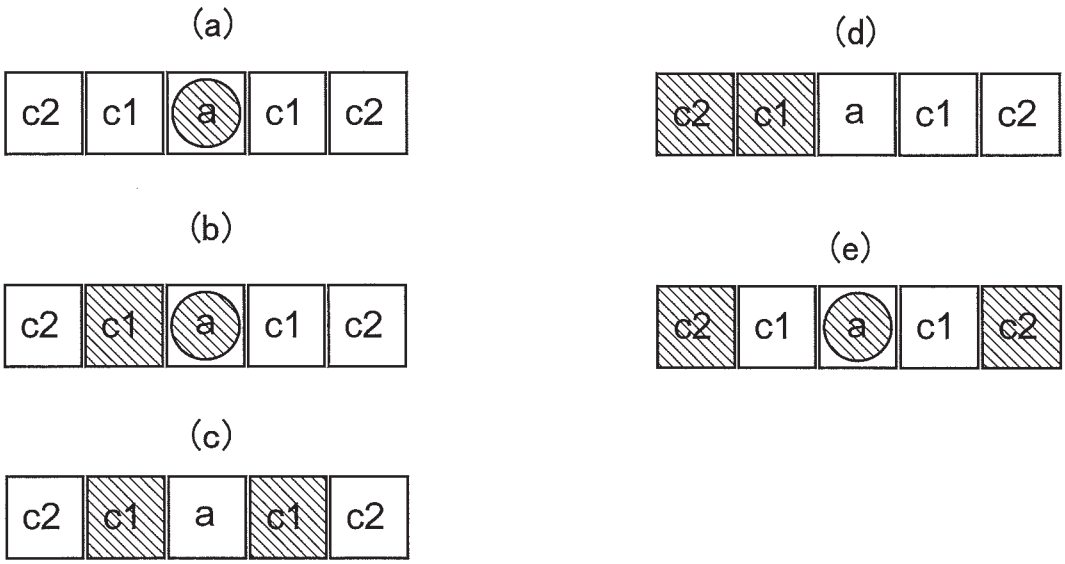

Fig.15

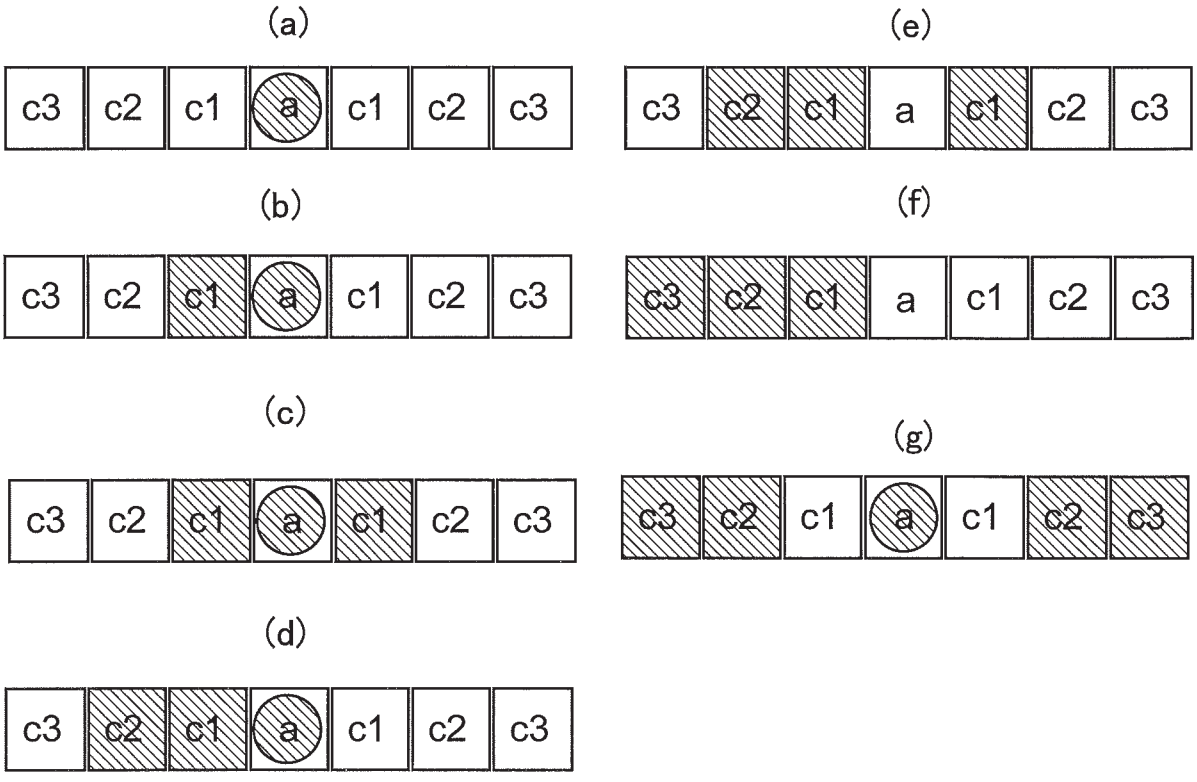
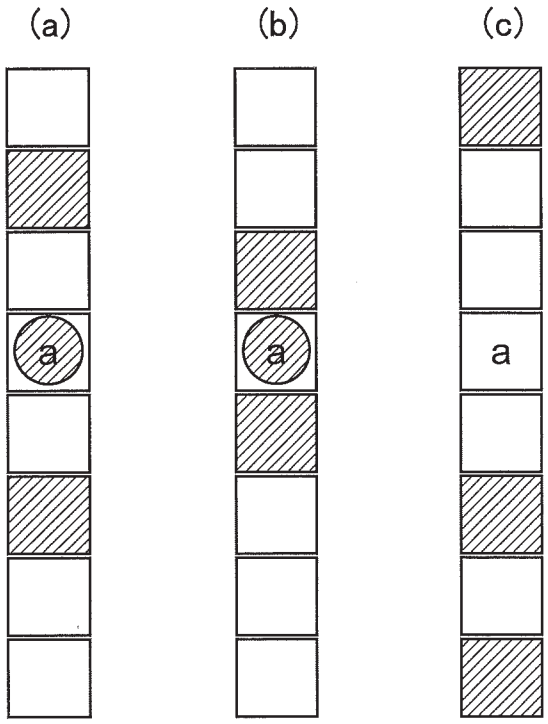
Fig.16