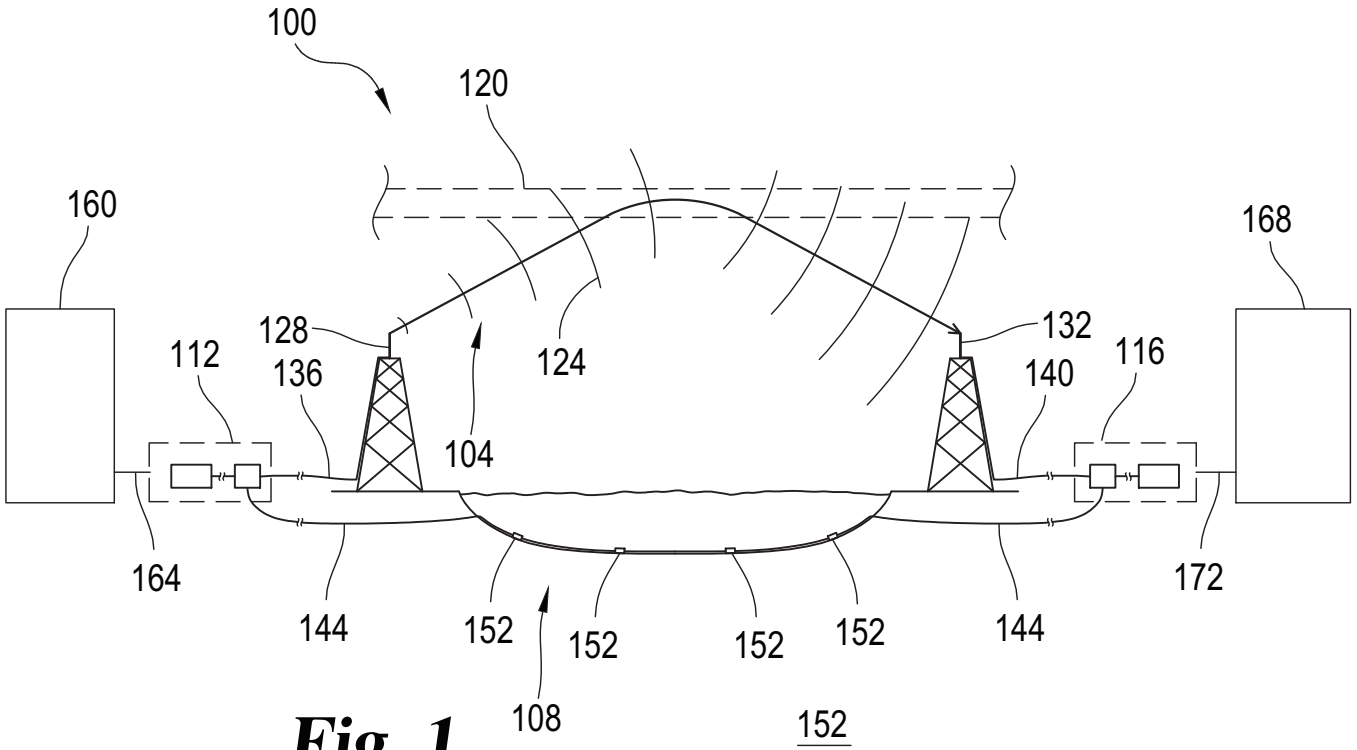
100
120
160
168
128
132
112
136
124
140
116
104
164
172
144
152
152
152
152
144
108
152

Fig. 1

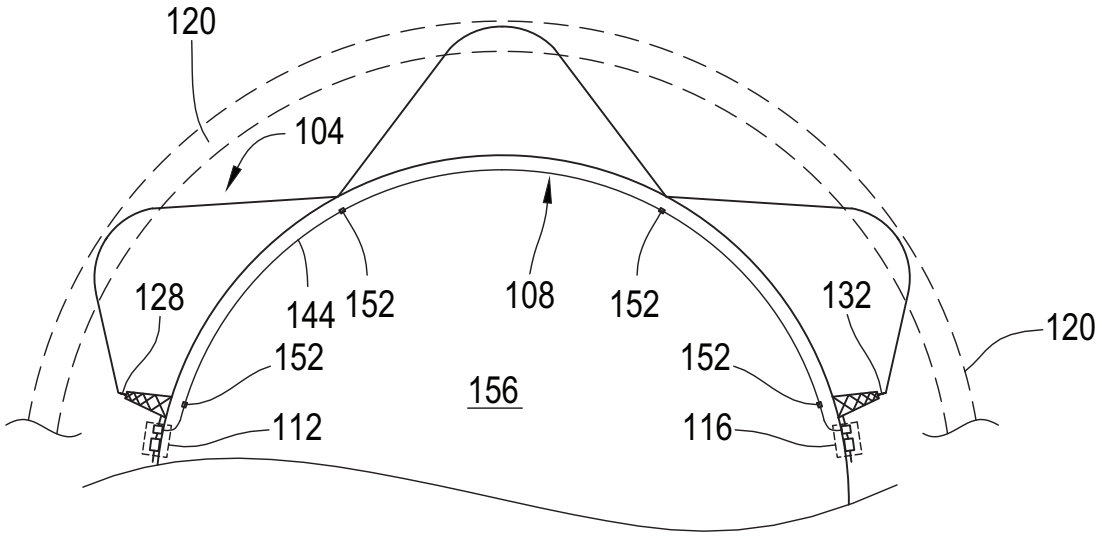
120
104
128
144
152
108
152
132
120
152
152
156
112
116

Fig. 2

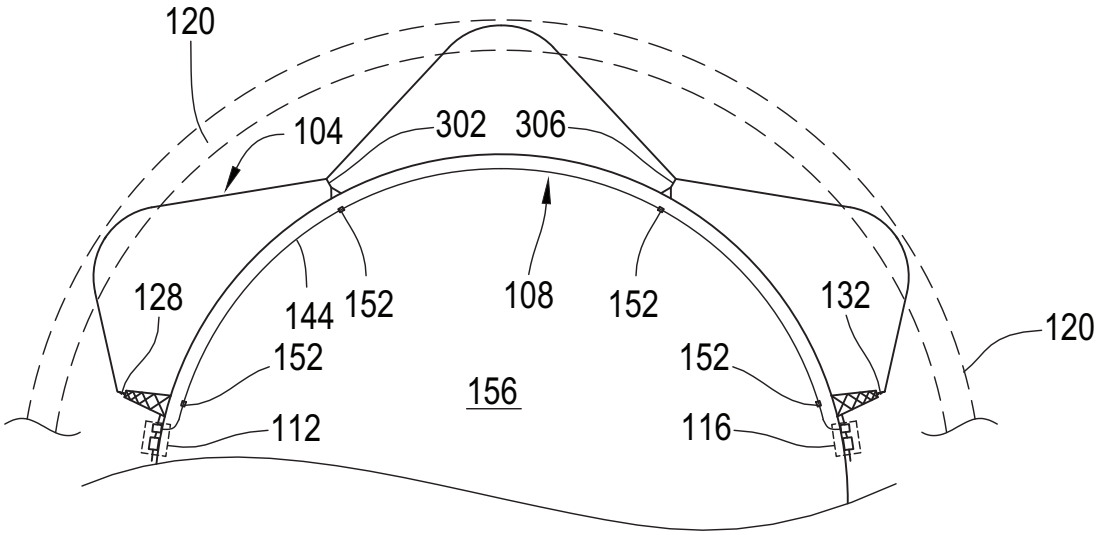
120
104
302
306
128
144
152
108
152
132
120
152
152
156
112
116

Fig. 3

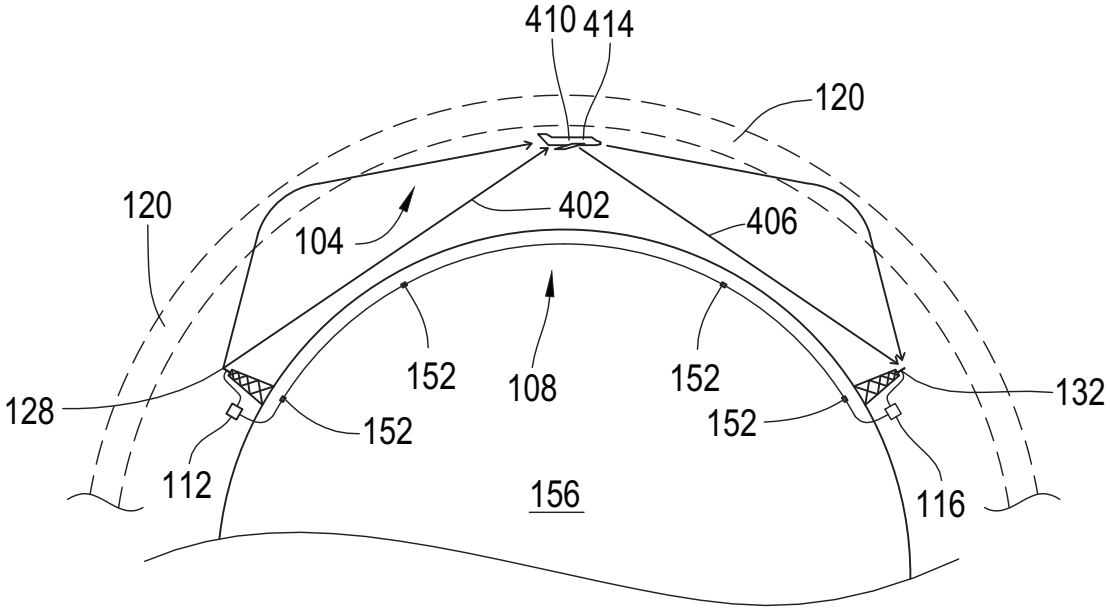
410
414
120
120
104
402
406
152
108
152
128
132
152
152
112
156
116

Fig. 4

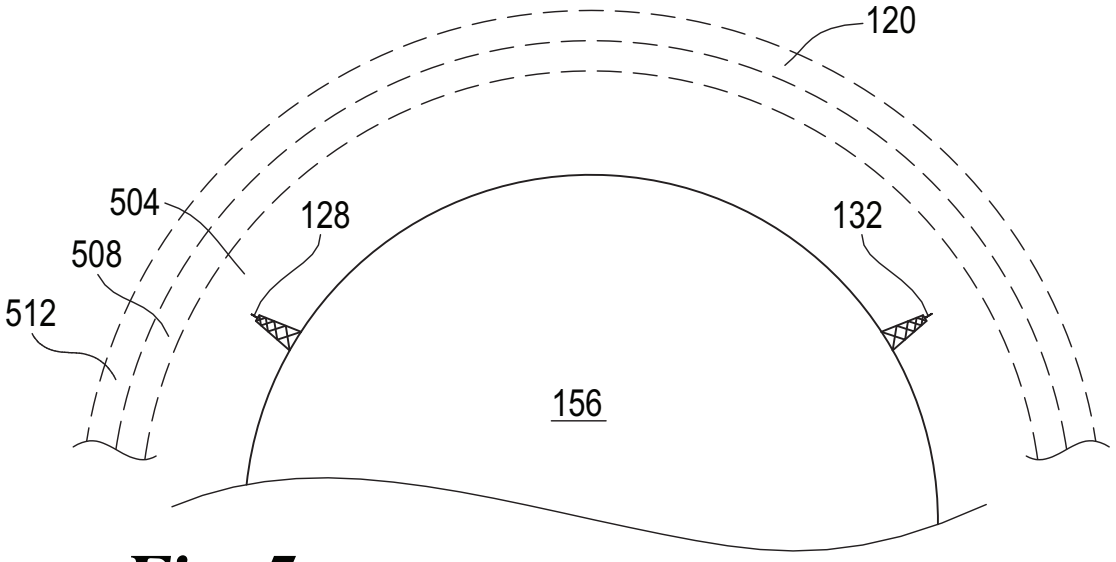
120
504
128
132
508
512
156

Fig. 5

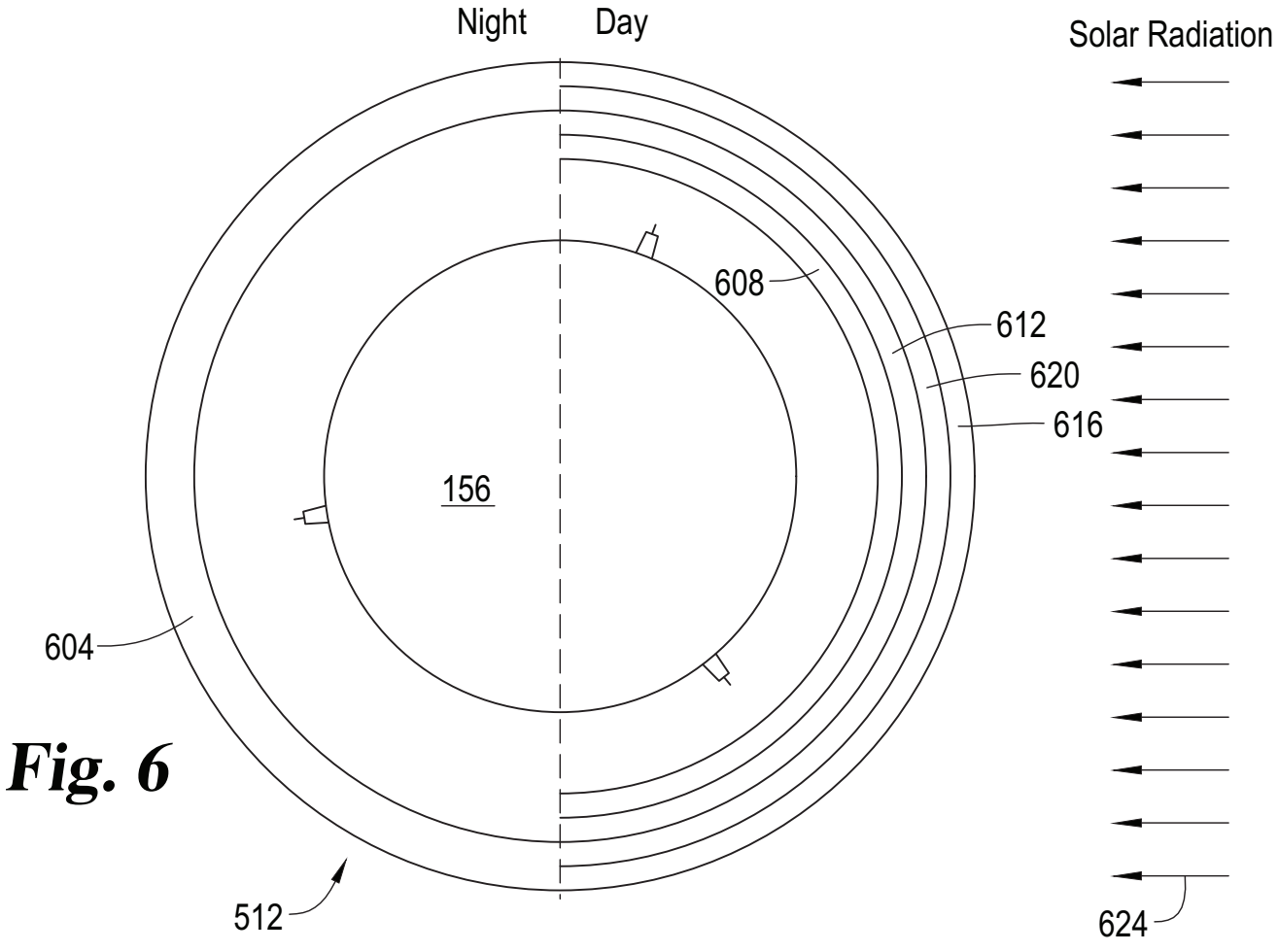
Night
Day
Solar Radiation
608
612
620
616
156
604
512
624

Fig. 6

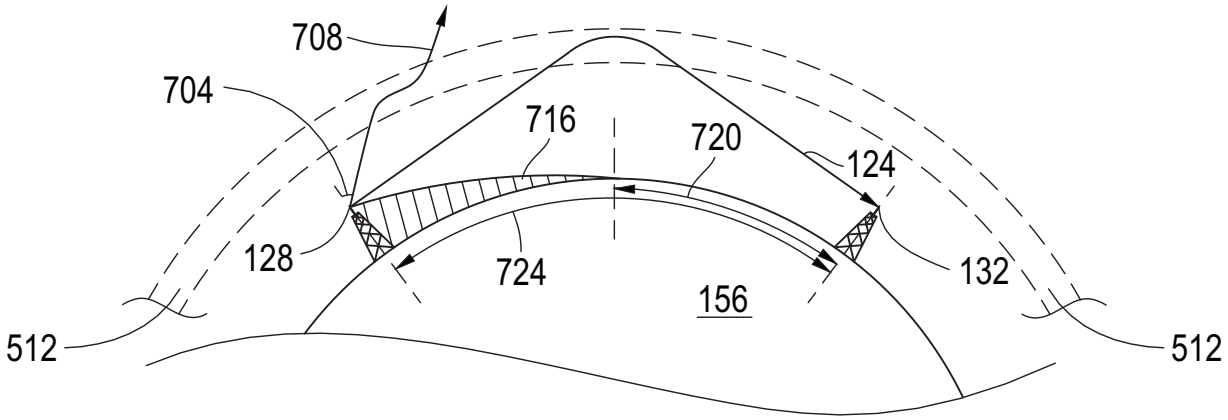

Fig. 7

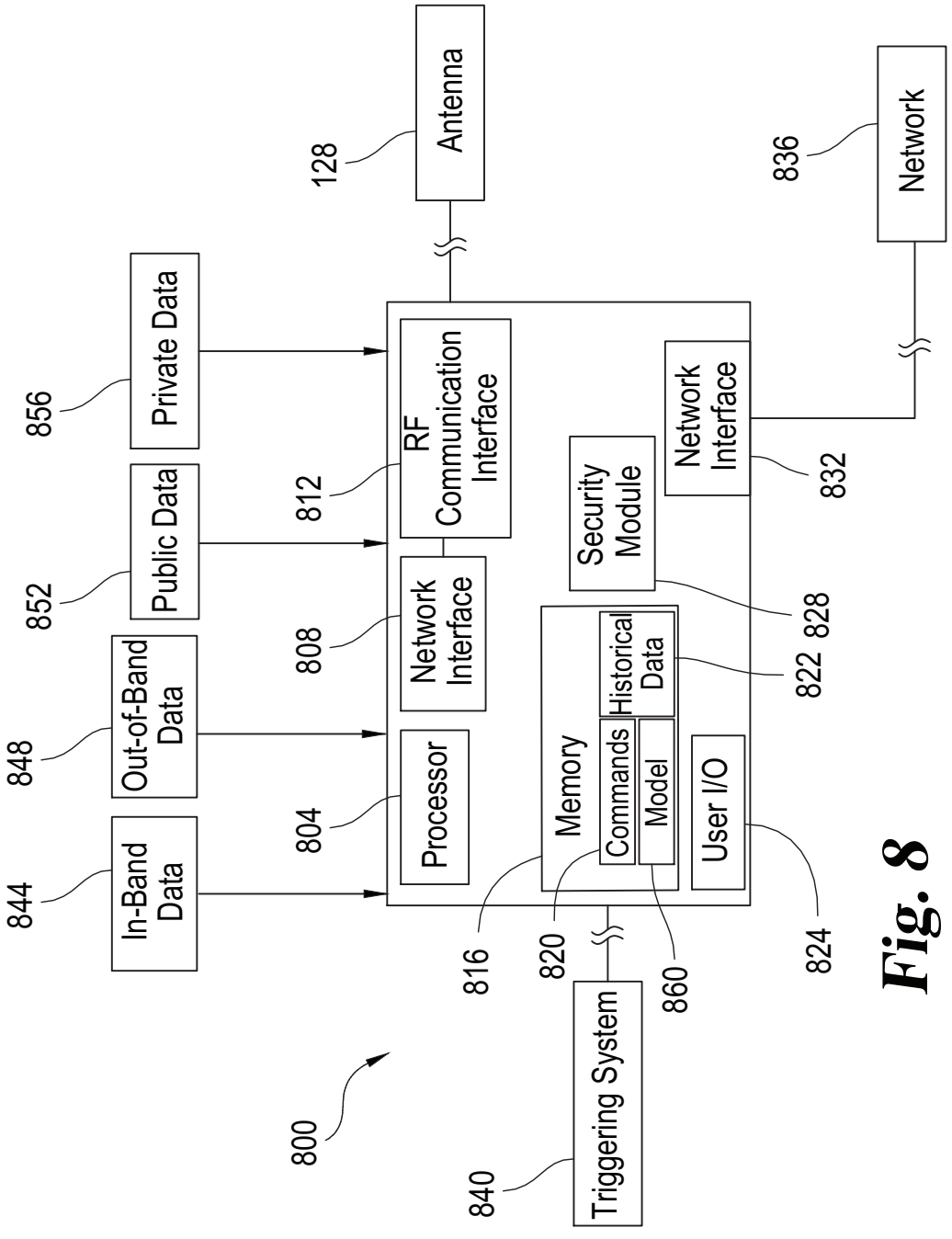
800
844
In-Band Data
848
Out-of-Band Data
852
Public Data
856
Private Data
804
Processor
808
Network Interface
812
RF Communication Interface
128
Antenna
816
820
860
Memory
Commands
Model
Historical Data
822
Security Module
828
User I/O
824
Network Interface
832
836
Network
840
Triggering System

Fig. 8

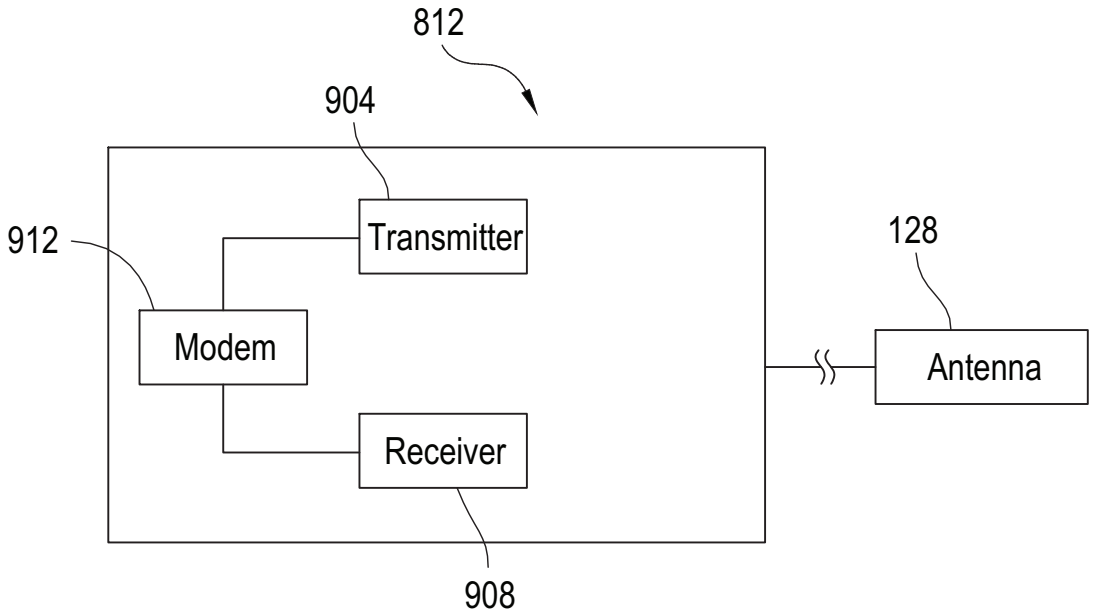

Fig. 9

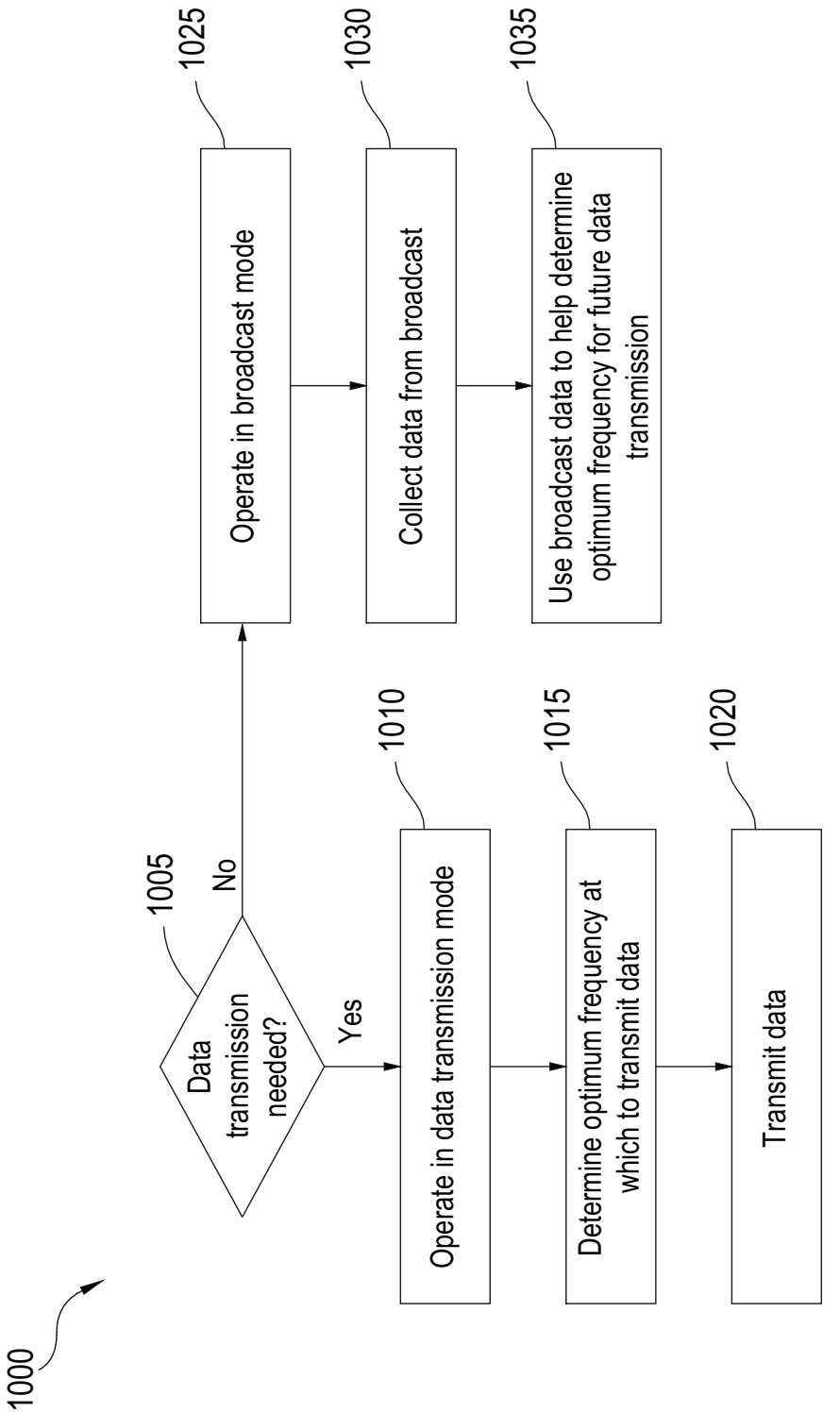
1000
1005
Data transmission needed?
No
Yes
1010
Operate in data transmission mode
1015
Determine optimum frequency at which to transmit data
1020
Transmit data
1025
Operate in broadcast mode
1030
Collect data from broadcast
1035
Use broadcast data to help determine optimum frequency for future data transmission

Fig. 10

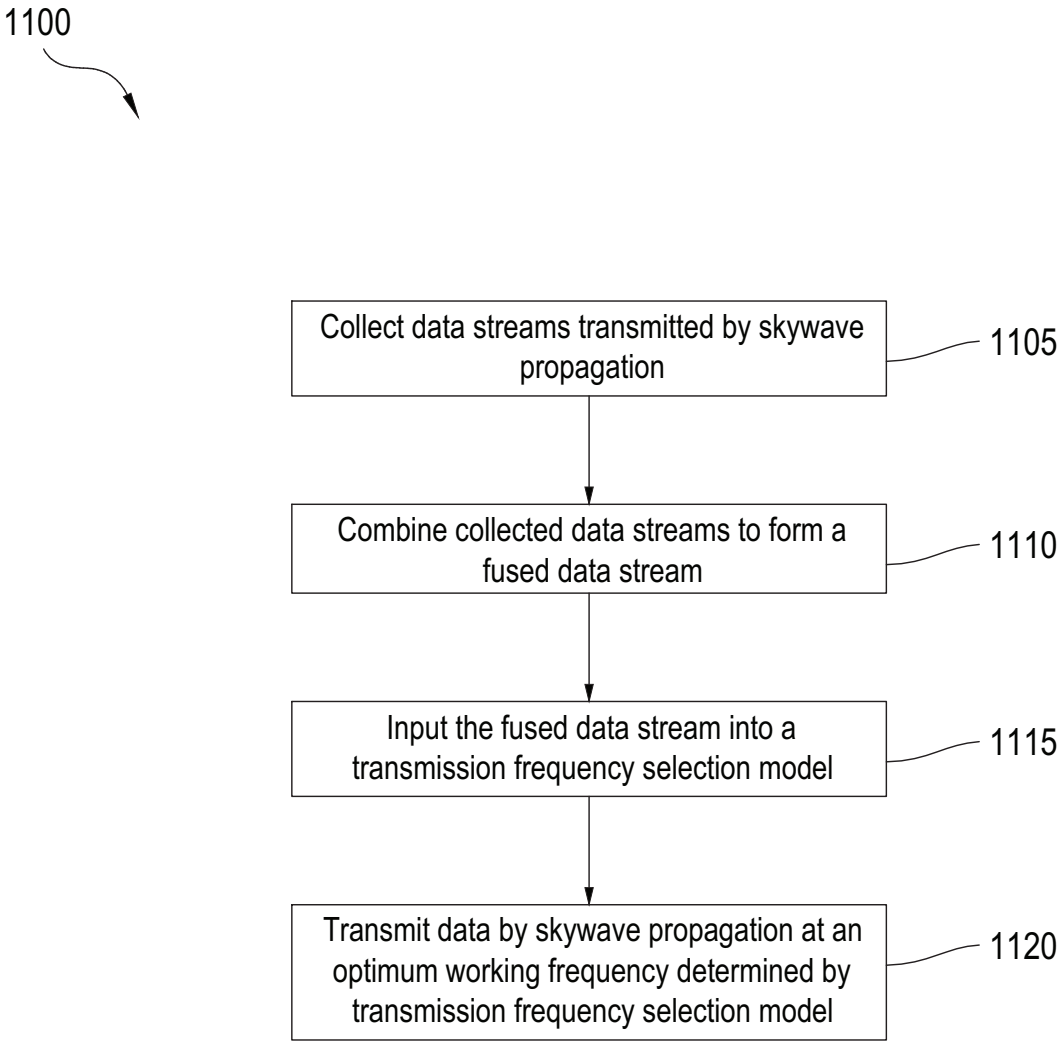
1100
Collect data streams transmitted by skywave propagation
1105
Combine collected data streams to form a fused data stream
1110
Input the fused data stream into a transmission frequency selection model
1115
Transmit data by skywave propagation at an optimum working frequency determined by transmission frequency selection model
1120

Fig. 11

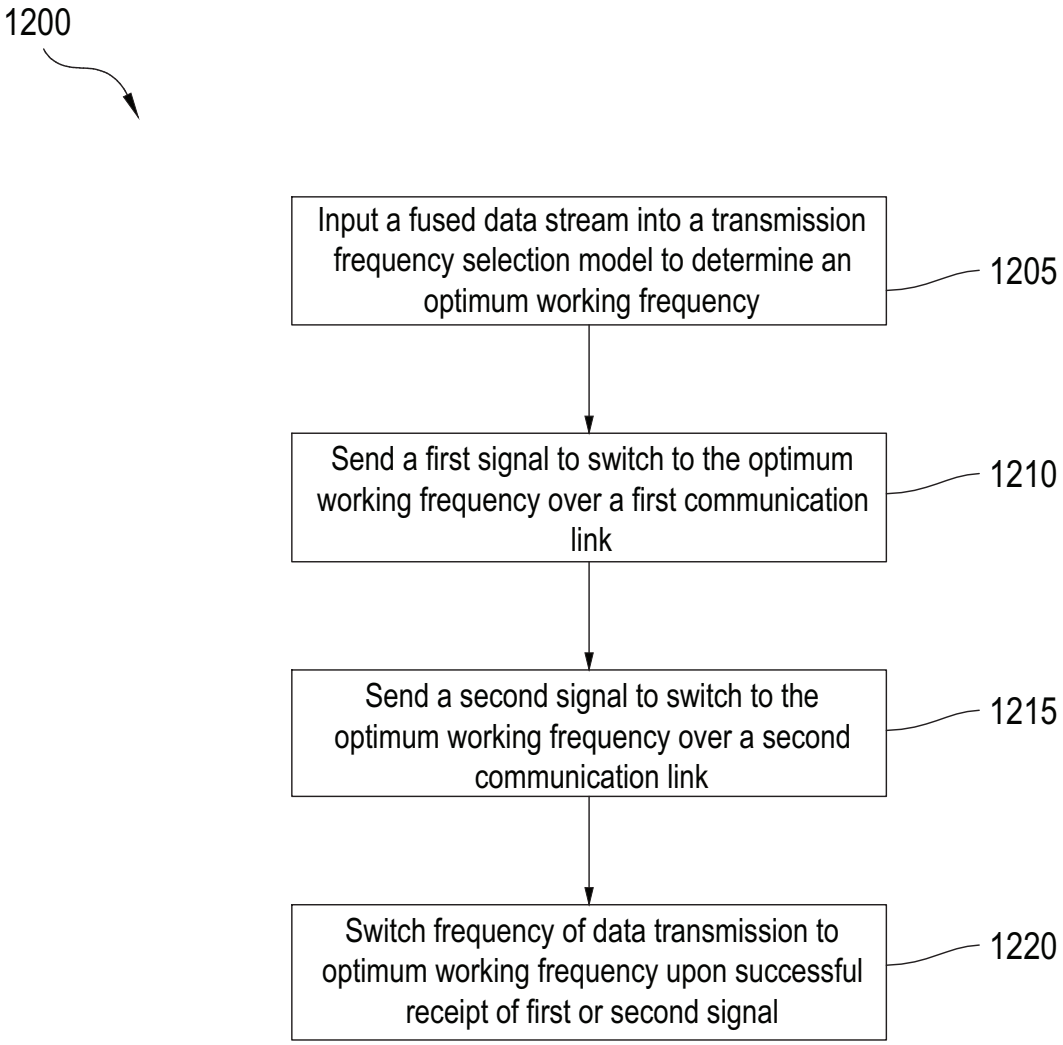
1200
Input a fused data stream into a transmission frequency selection model to determine an optimum working frequency
1205
Send a first signal to switch to the optimum working frequency over a first communication link
1210
Send a second signal to switch to the optimum working frequency over a second communication link
1215
Switch frequency of data transmission to optimum working frequency upon successful receipt of first or second signal
1220

Fig. 12