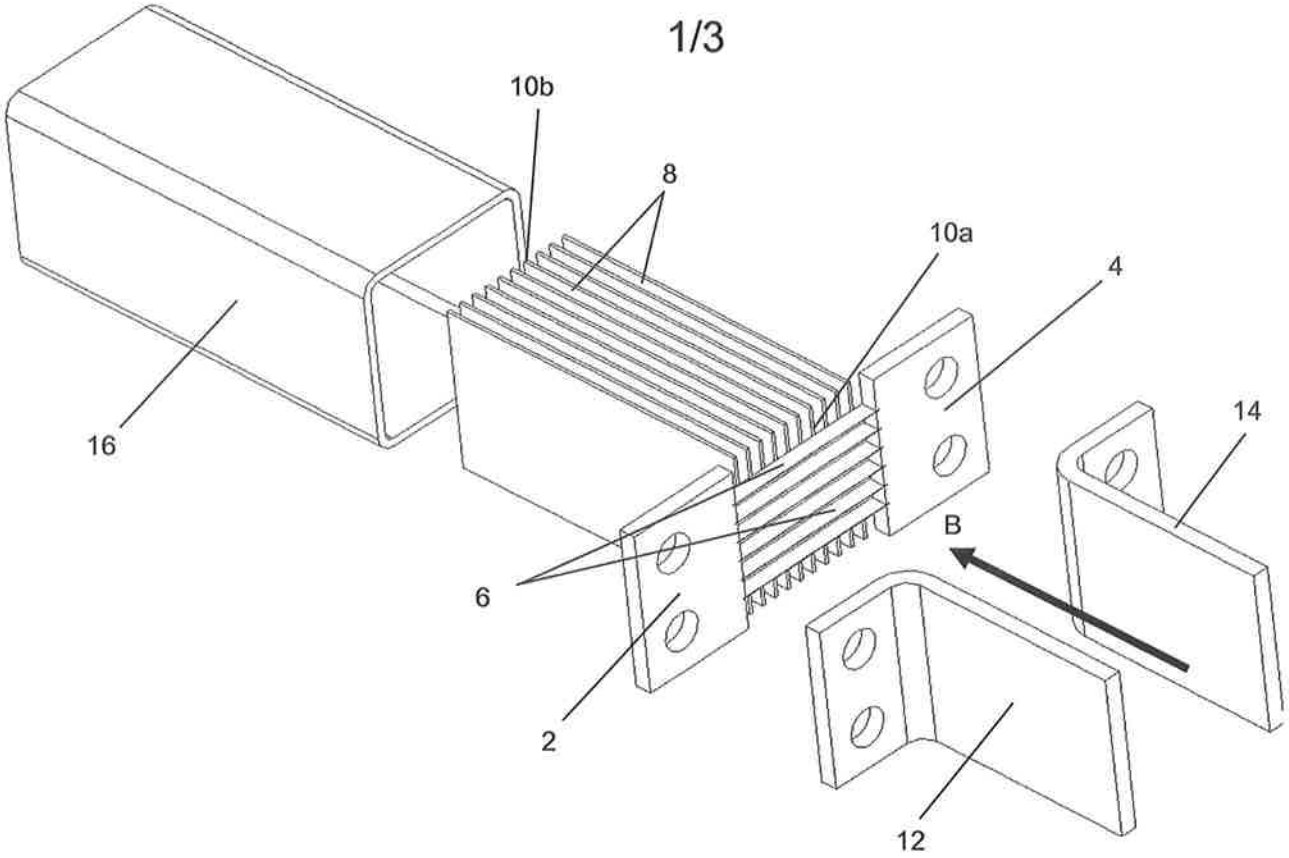

Figure 1

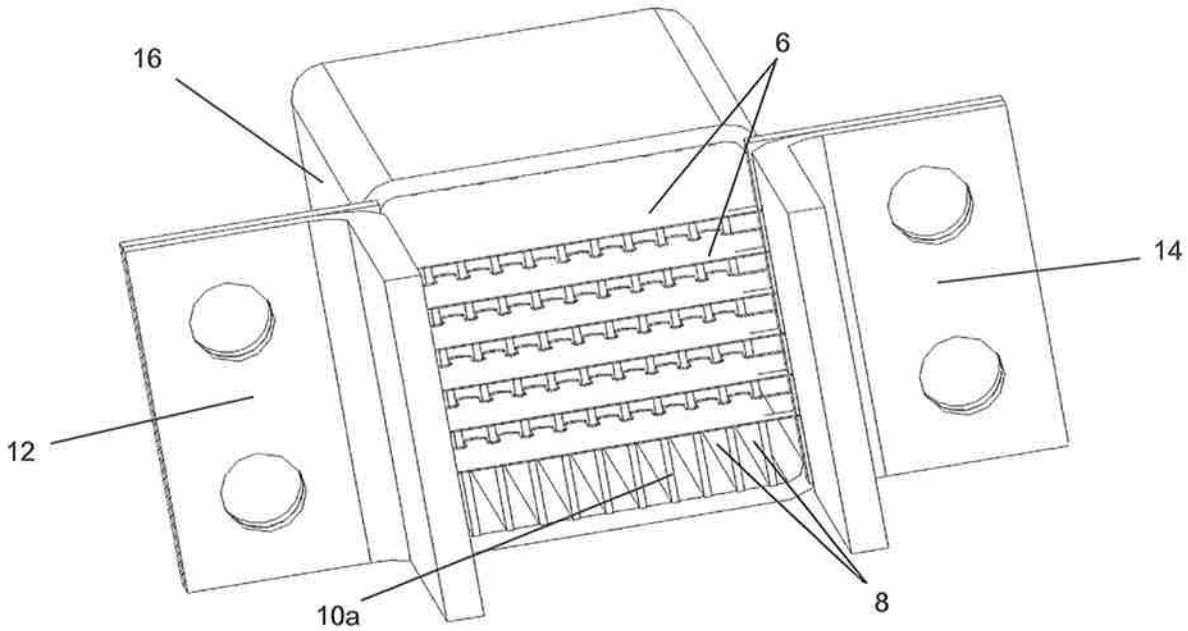

Figure 2

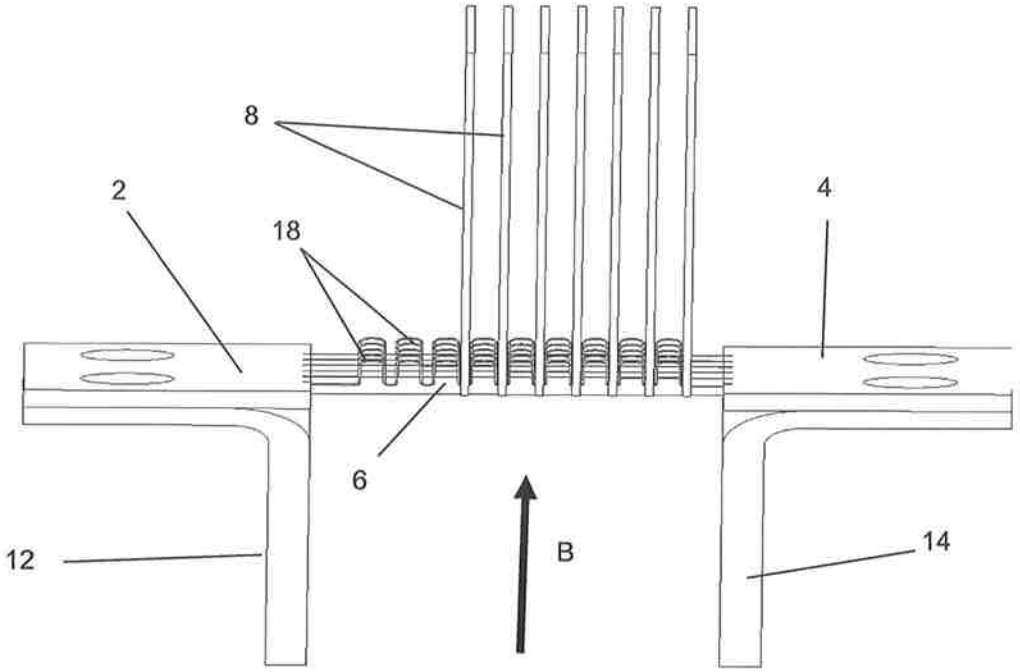

Figure 3

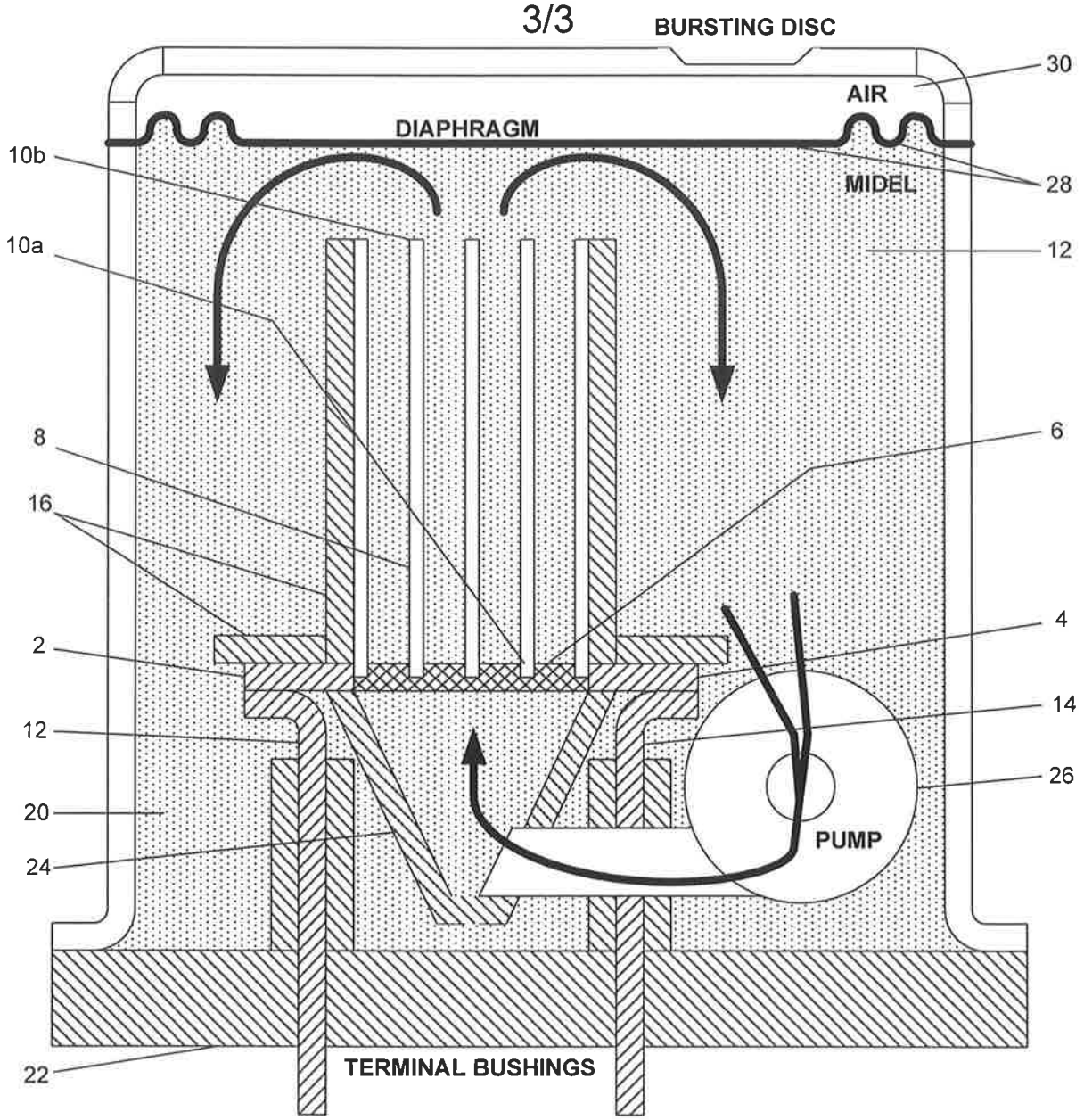
BURSTING DISC
30
AIR
DIAPHRAGM
10b
28
MIDEL
10a
12
8
6
16
4
2
14
12
26
20
PUMP
24
22
TERMINAL BUSHINGS

Figure 4