Fig. 1

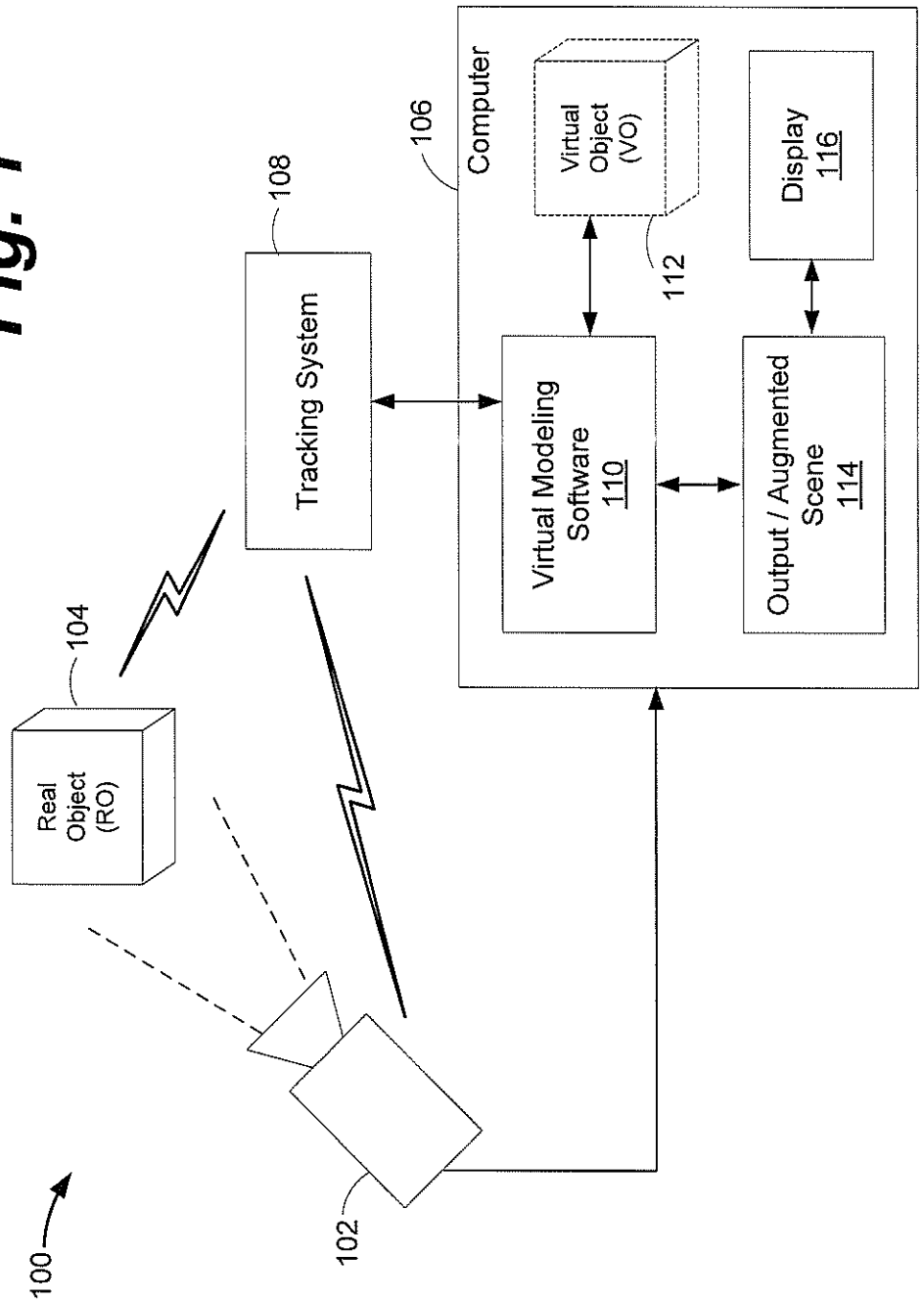
100
102
104
Real Object (RO)
108
Tracking System
106
Computer
Virtual Object (VO)
112
Virtual Modeling Software 110
Output / Augmented Scene 114
Display 116

Fig. 2

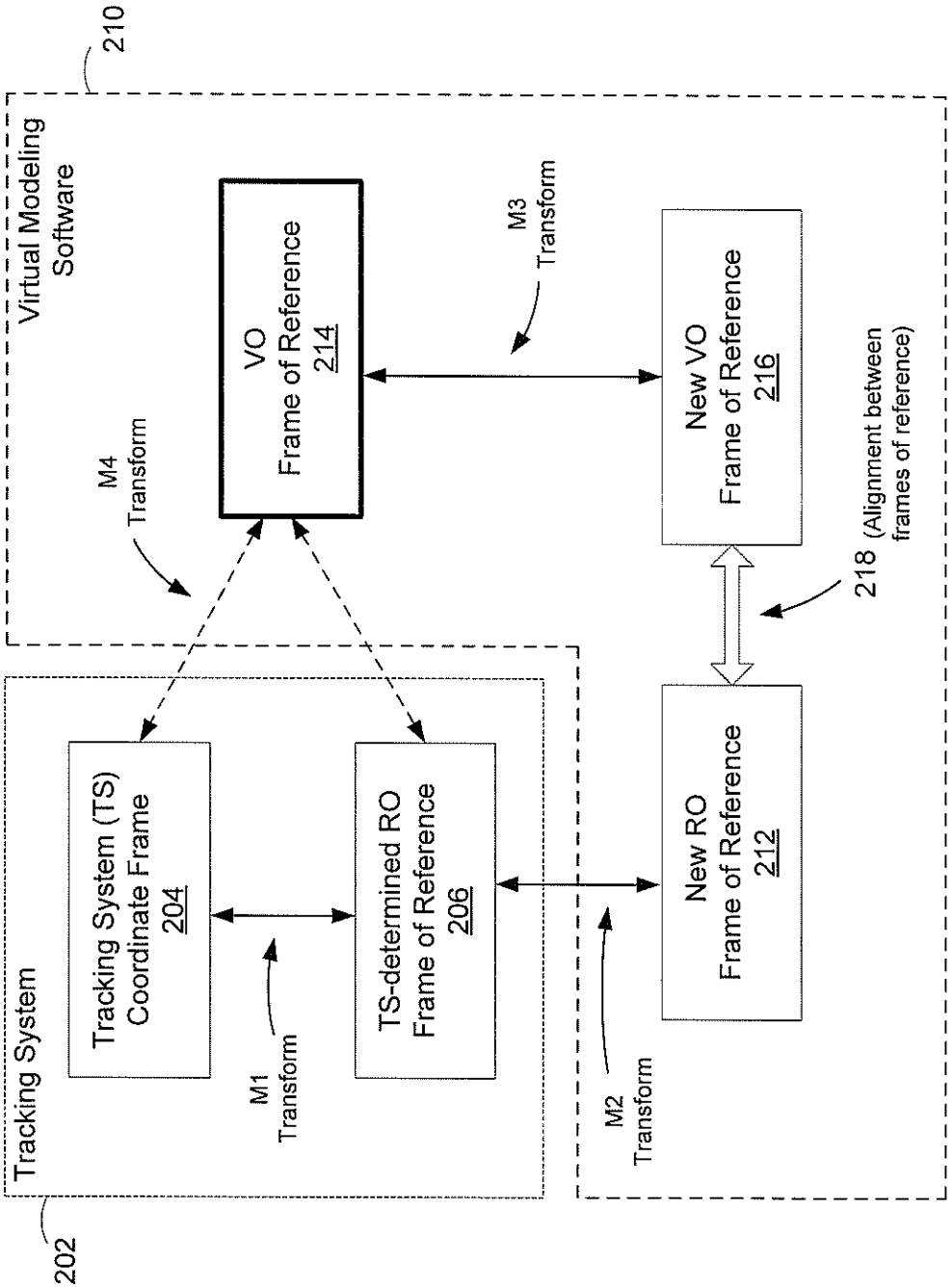
210
Virtual Modeling Software
VO Frame of Reference 214
M3 Transform
New VO Frame of Reference 216
M4 Transform
218 (Alignment between frames of reference)
Tracking System (TS) Coordinate Frame 204
TS-determined RO Frame of Reference 206
New RO Frame of Reference 212
M1 Transform
M2 Transform
Tracking System
202

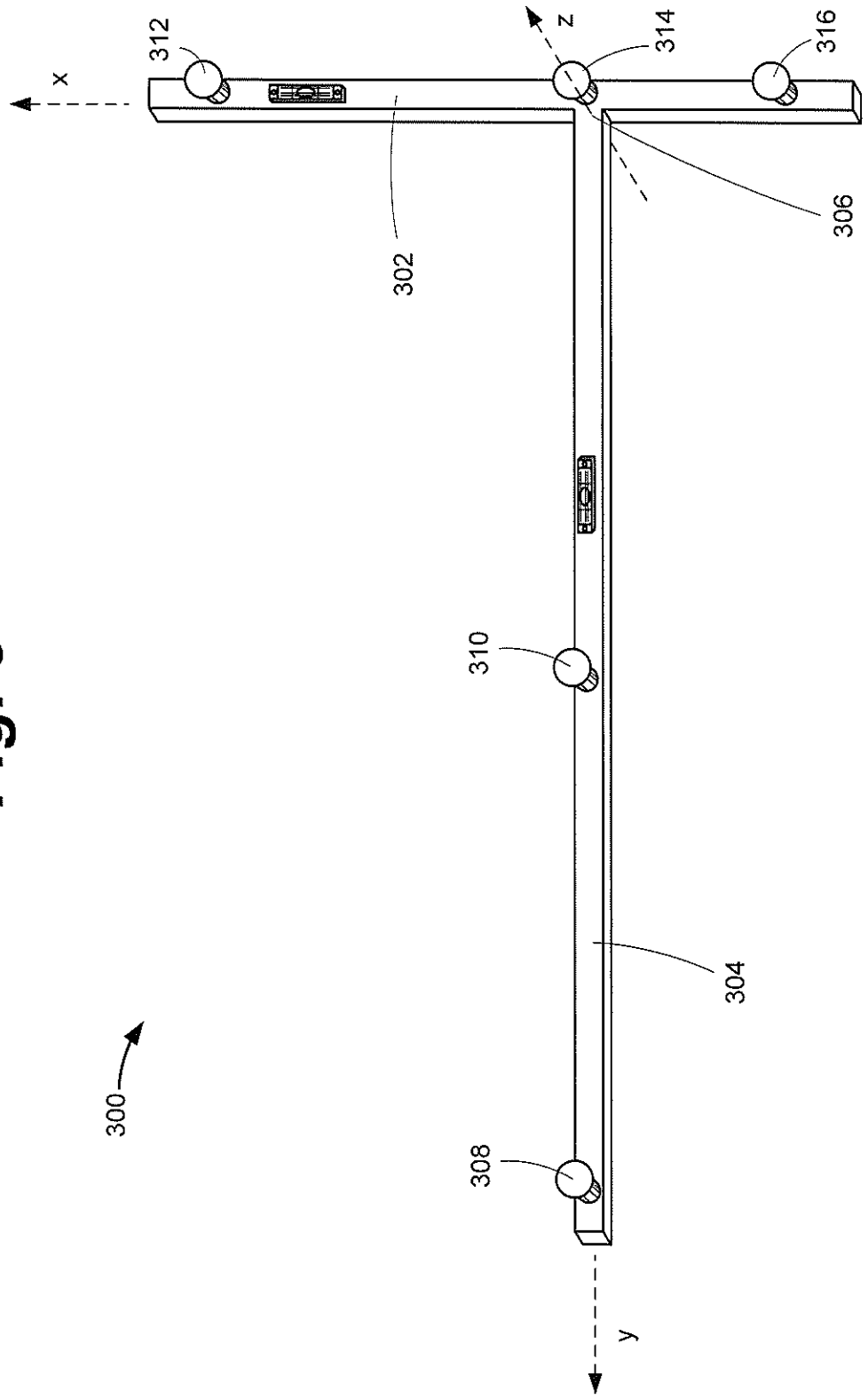

Fig. 3

Fig. 4A

Fig. 4B

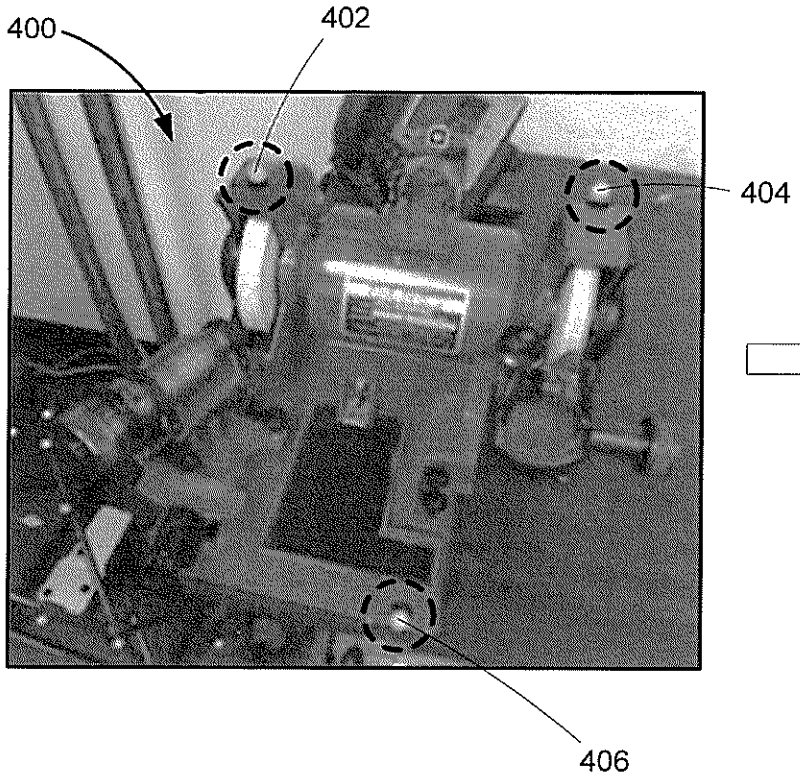

M1 Transform:

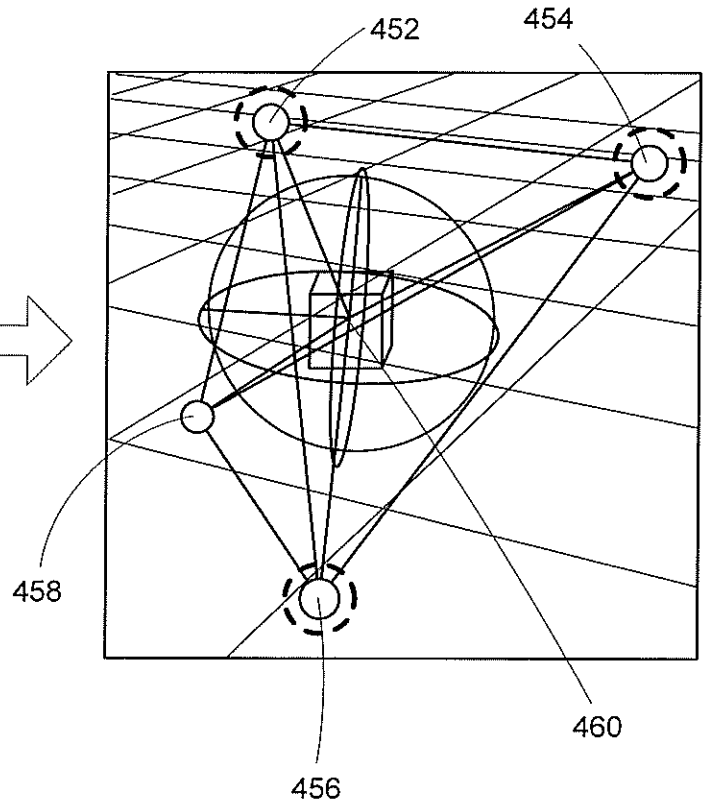

Fig. 5

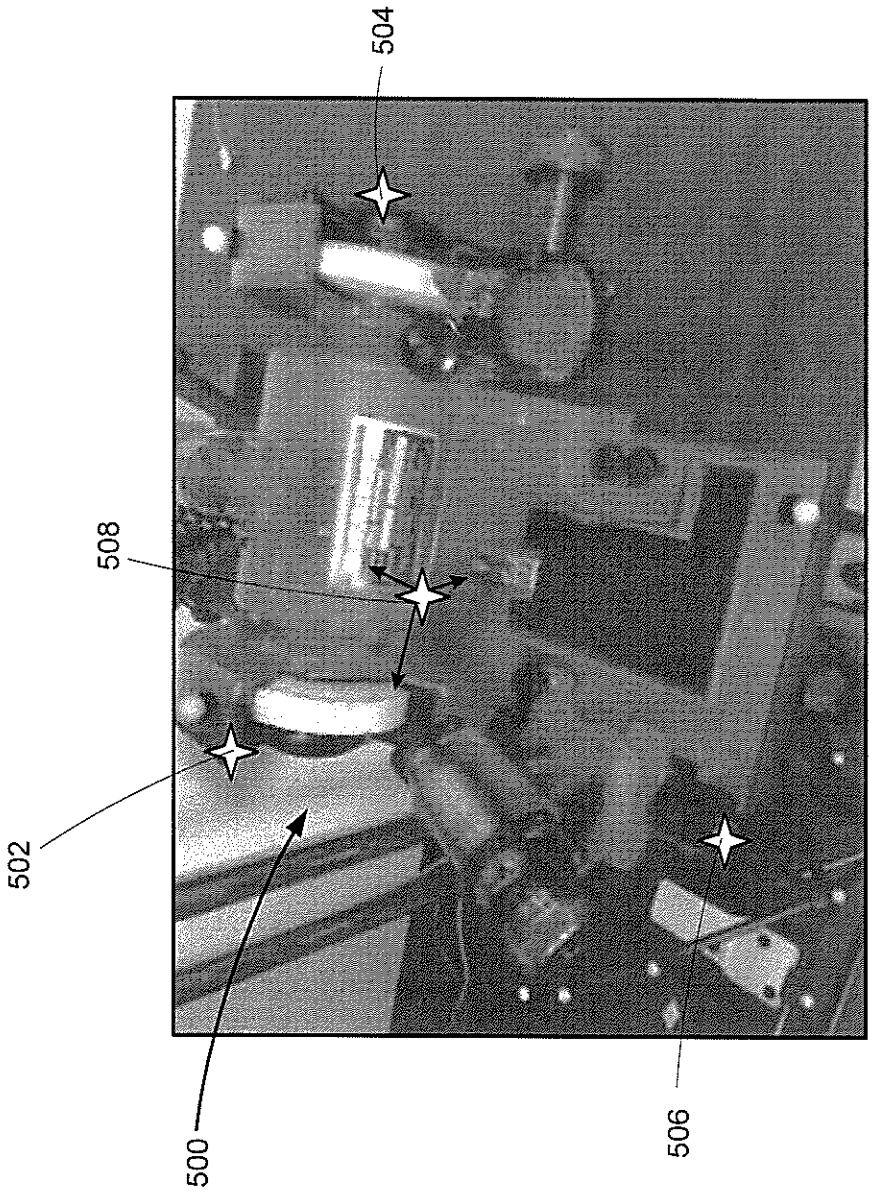

Fig. 6

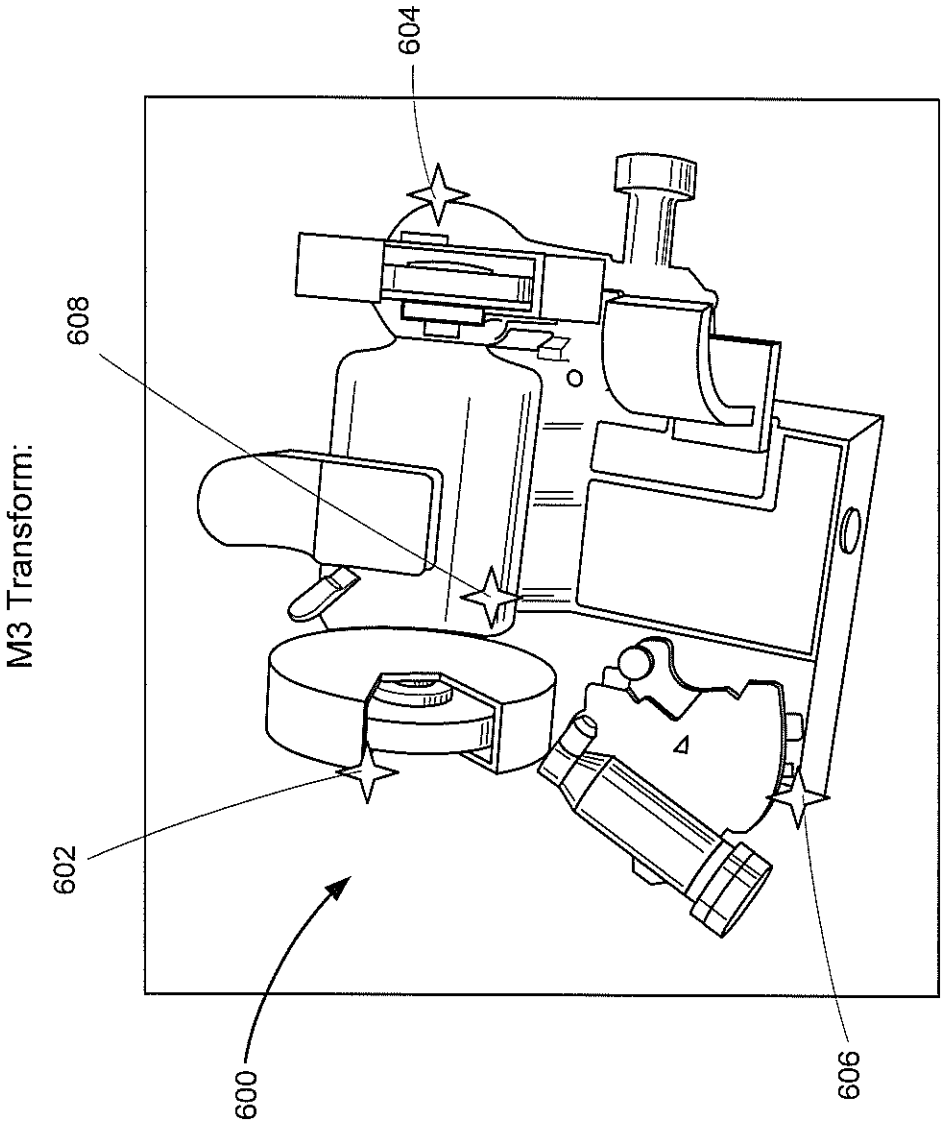

Fig. 7

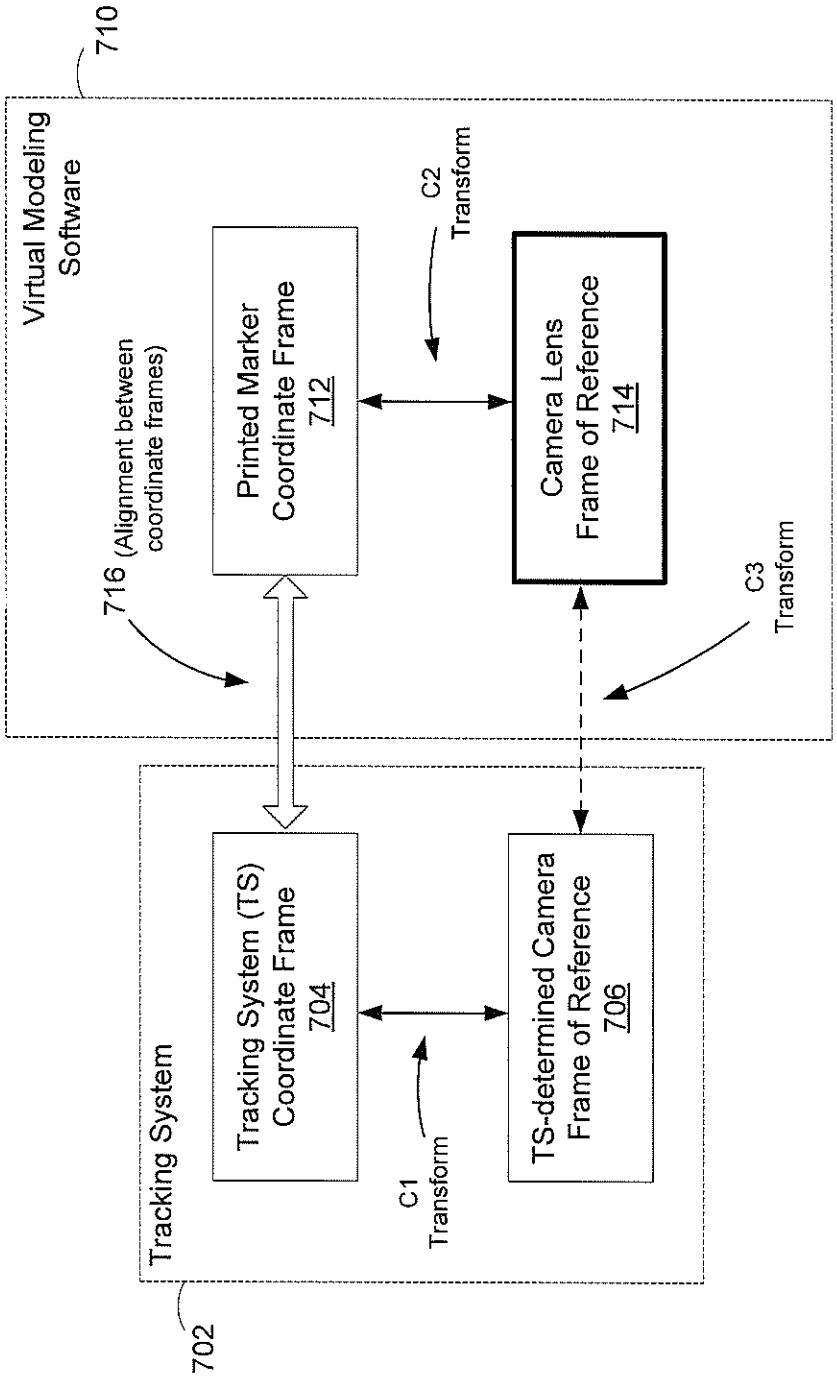
710
Virtual Modeling Software
Printed Marker Coordinate Frame 712
Camera Lens Frame of Reference 714
C2 Transform
C3 Transform
716 (Alignment between coordinate frames)
Tracking System
Tracking System (TS) Coordinate Frame 704
TS-determined Camera Frame of Reference 706
C1 Transform
702

Fig. 8A

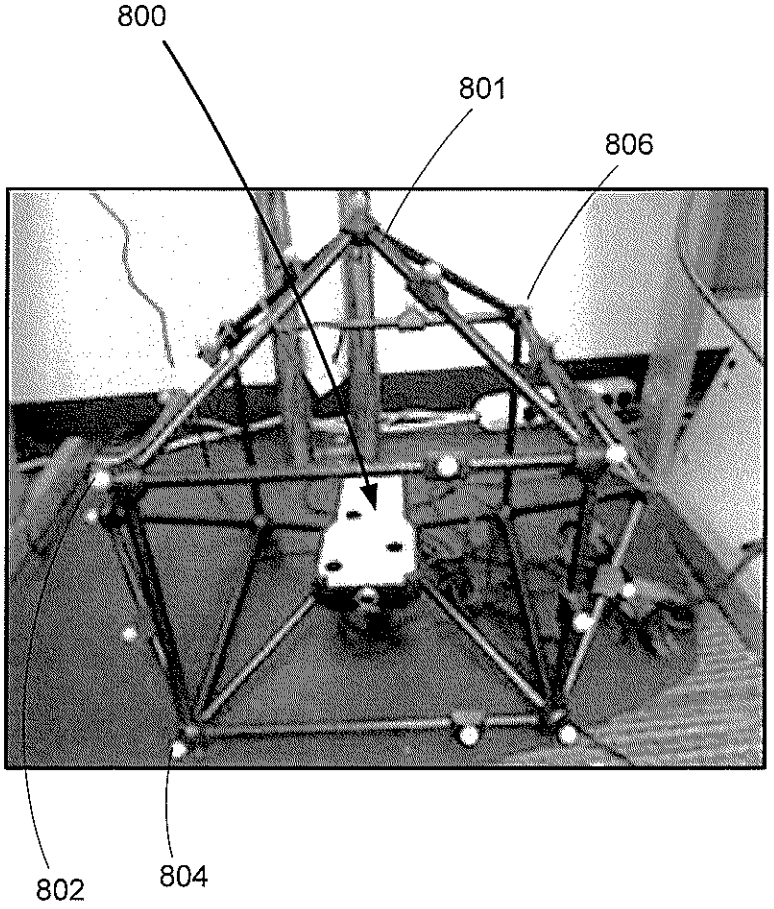

Fig. 8B

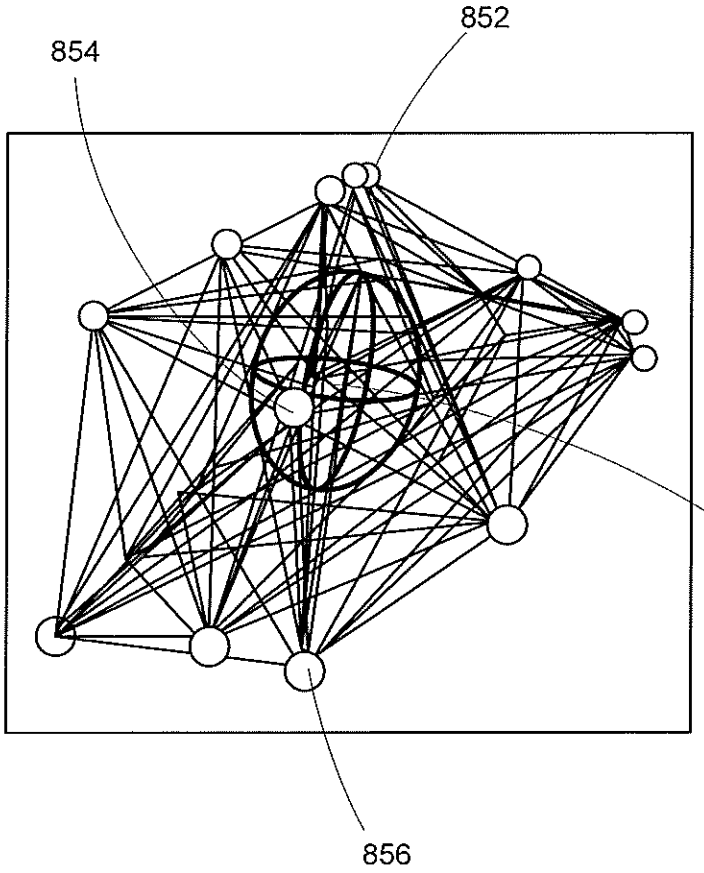

Fig. 8C

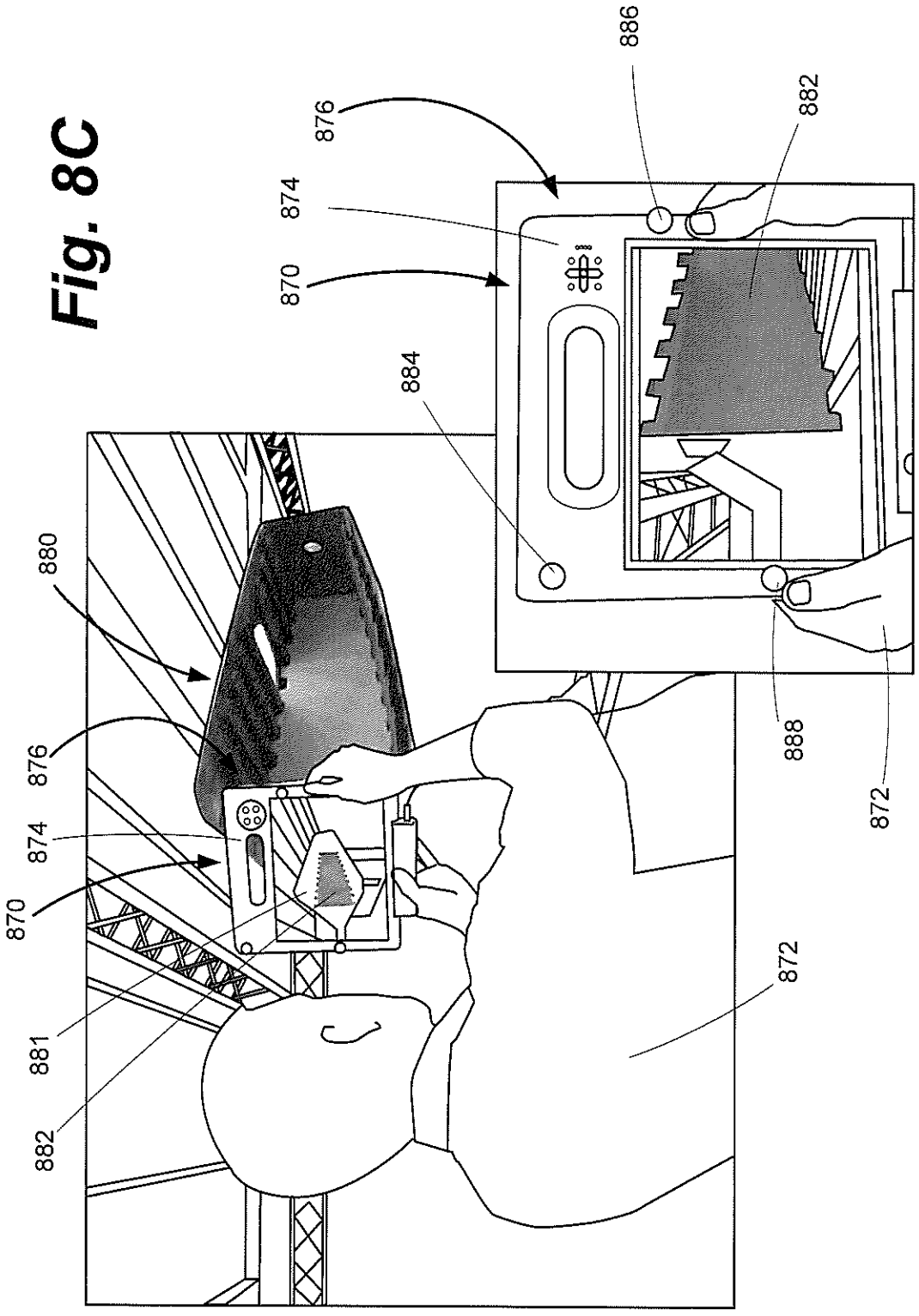

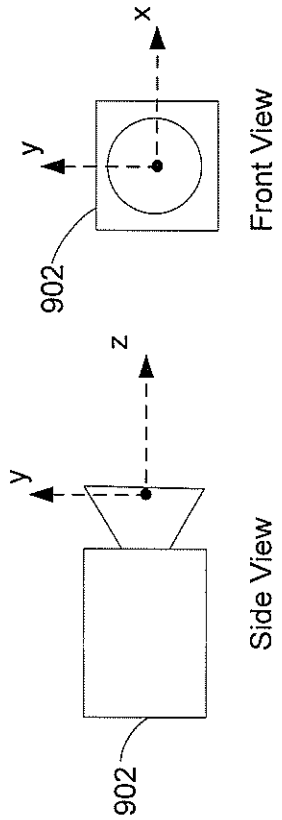
x
y
902
Front View
z
y
902
Side View

Fig. 9A

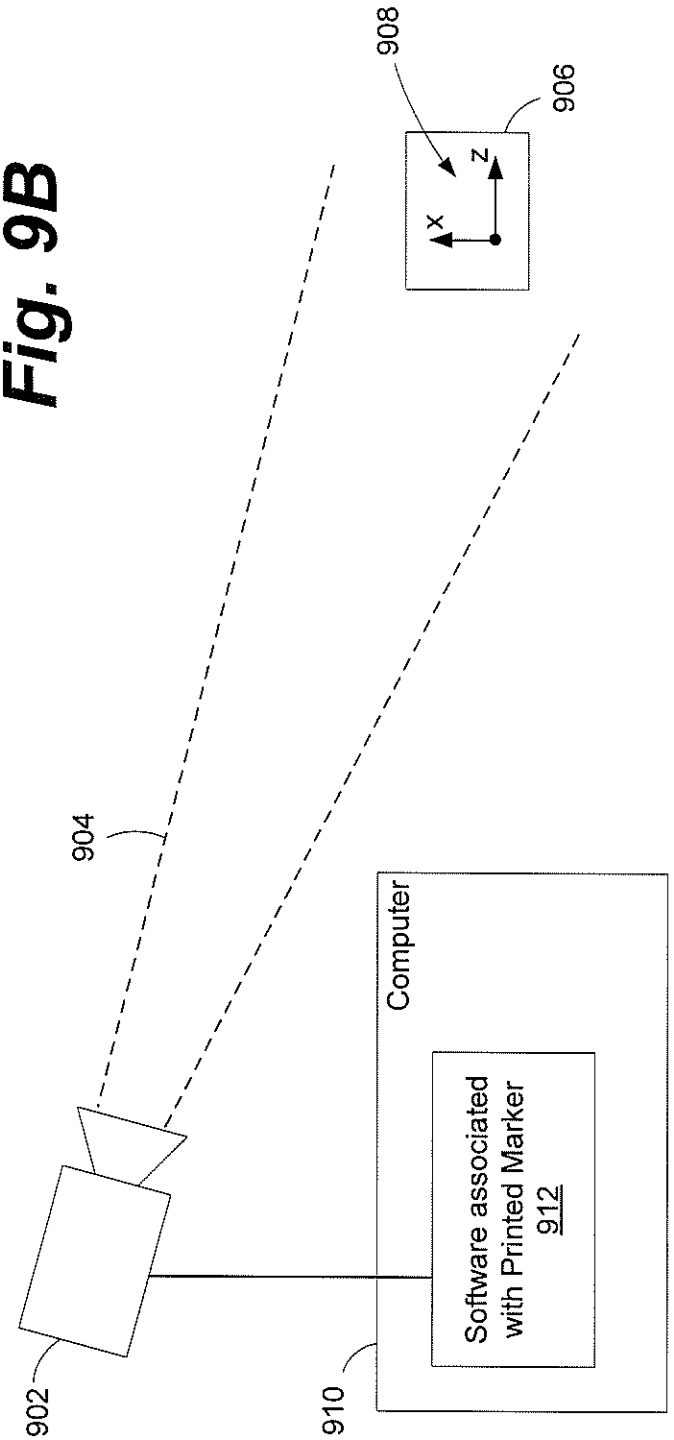
908
906
z
x
904
902
910
Computer
Software associated with Printed Marker
912

Fig. 9B

Fig. 10A

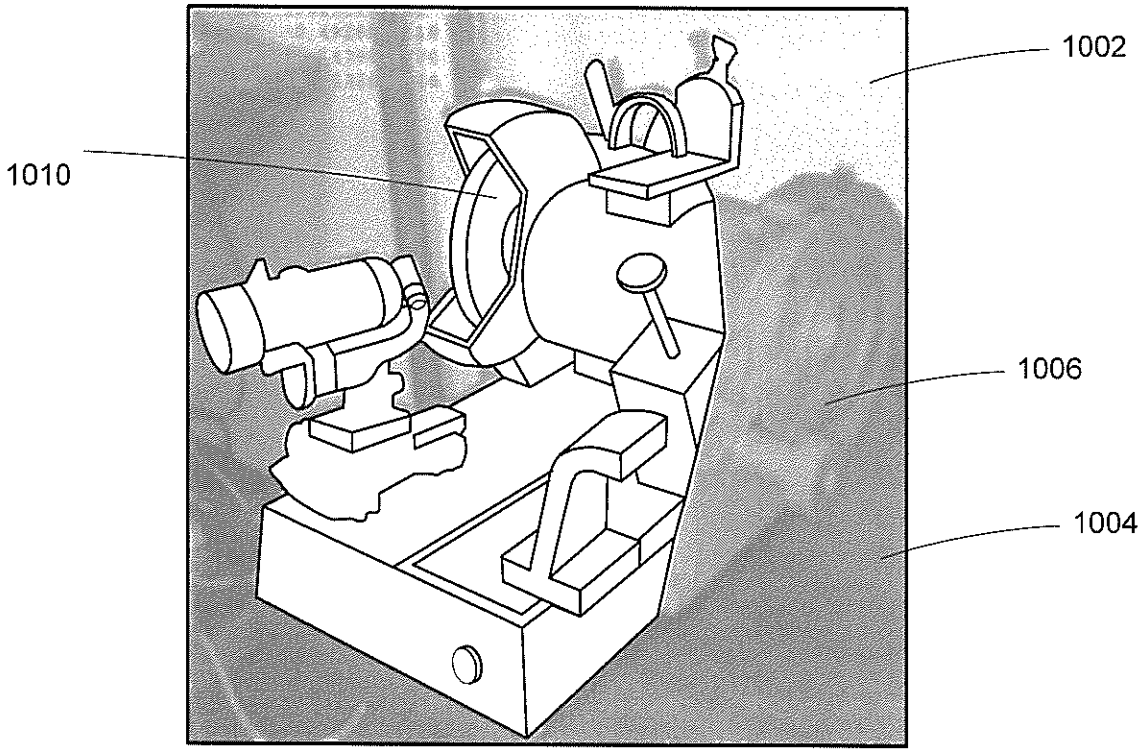

Fig. 10B

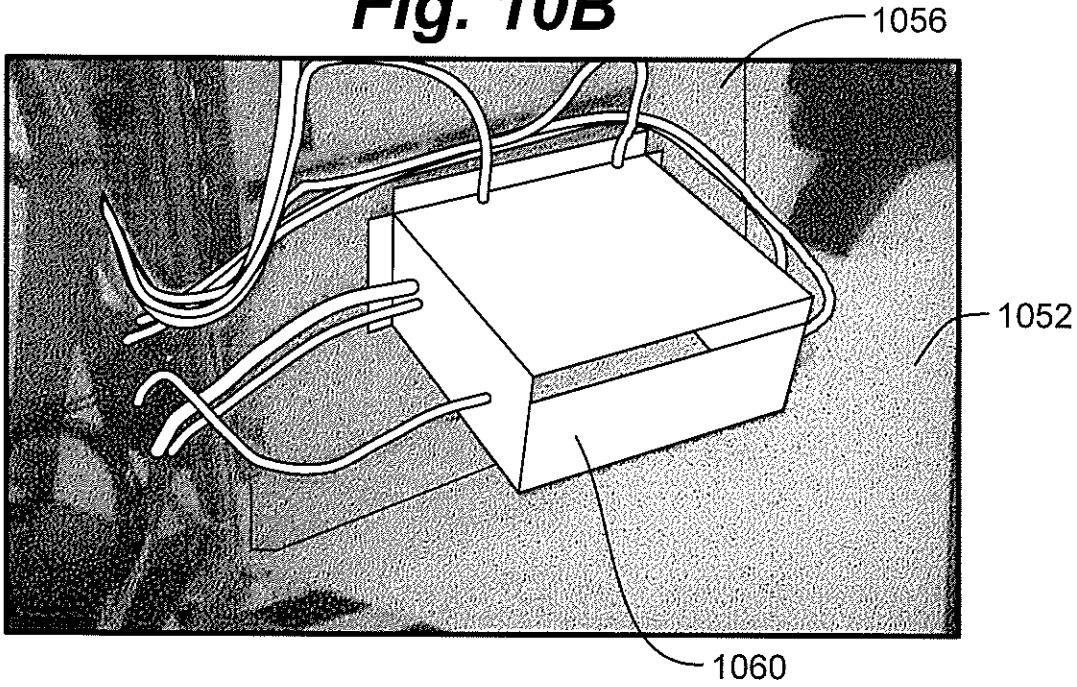

Fig. 11

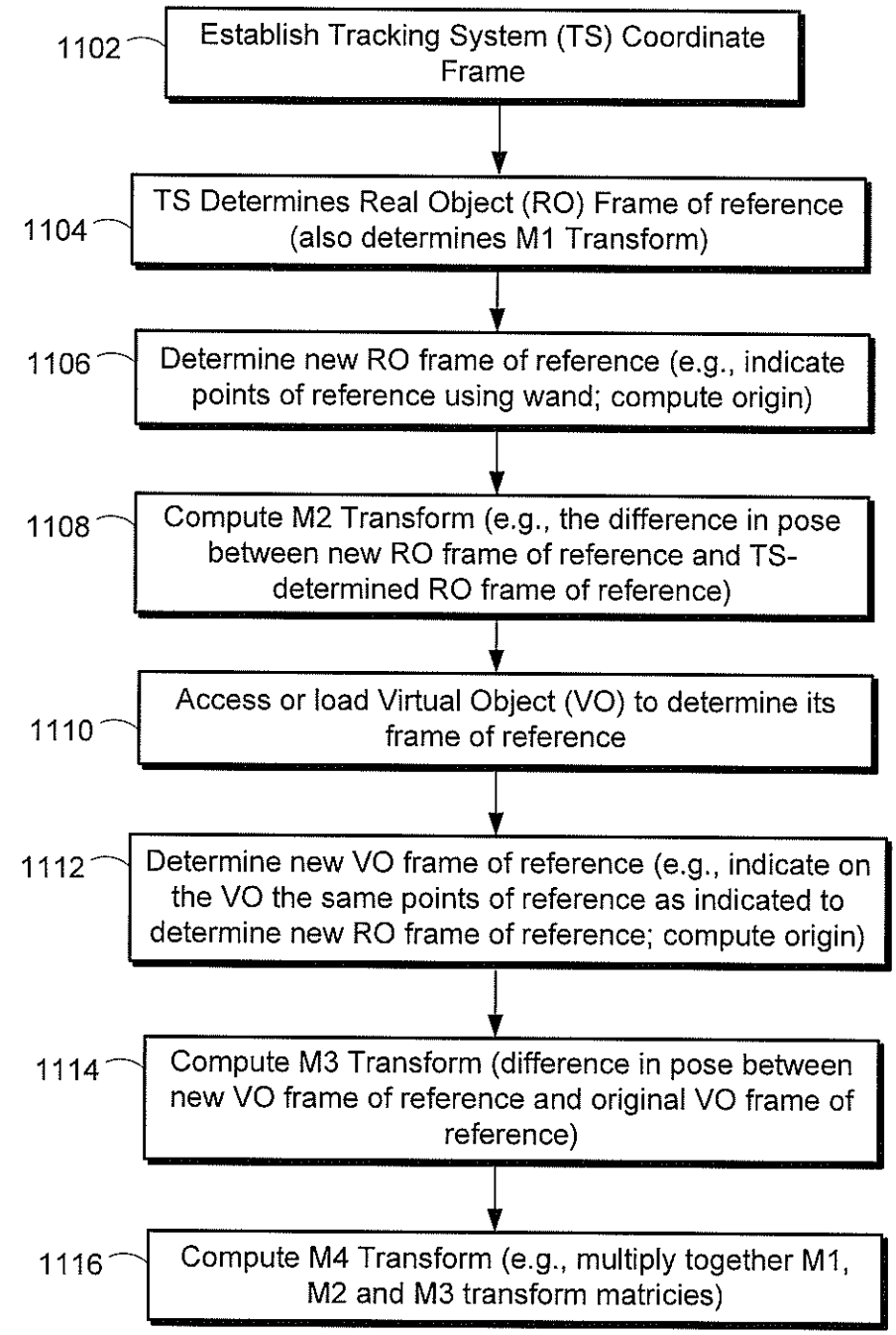
1100
1102
Establish Tracking System (TS) Coordinate Frame
1104
TS Determines Real Object (RO) Frame of reference (also determines M1 Transform)
1106
Determine new RO frame of reference (e.g., indicate points of reference using wand; compute origin)
1108
Compute M2 Transform (e.g., the difference in pose between new RO frame of reference and TS-determined RO frame of reference)
1110
Access or load Virtual Object (VO) to determine its frame of reference
1112
Determine new VO frame of reference (e.g., indicate on the VO the same points of reference as indicated to determine new RO frame of reference; compute origin)
1114
Compute M3 Transform (difference in pose between new VO frame of reference and original VO frame of reference)
1116
Compute M4 Transform (e.g., multiply together M1, M2 and M3 transform matricies)

Fig. 12

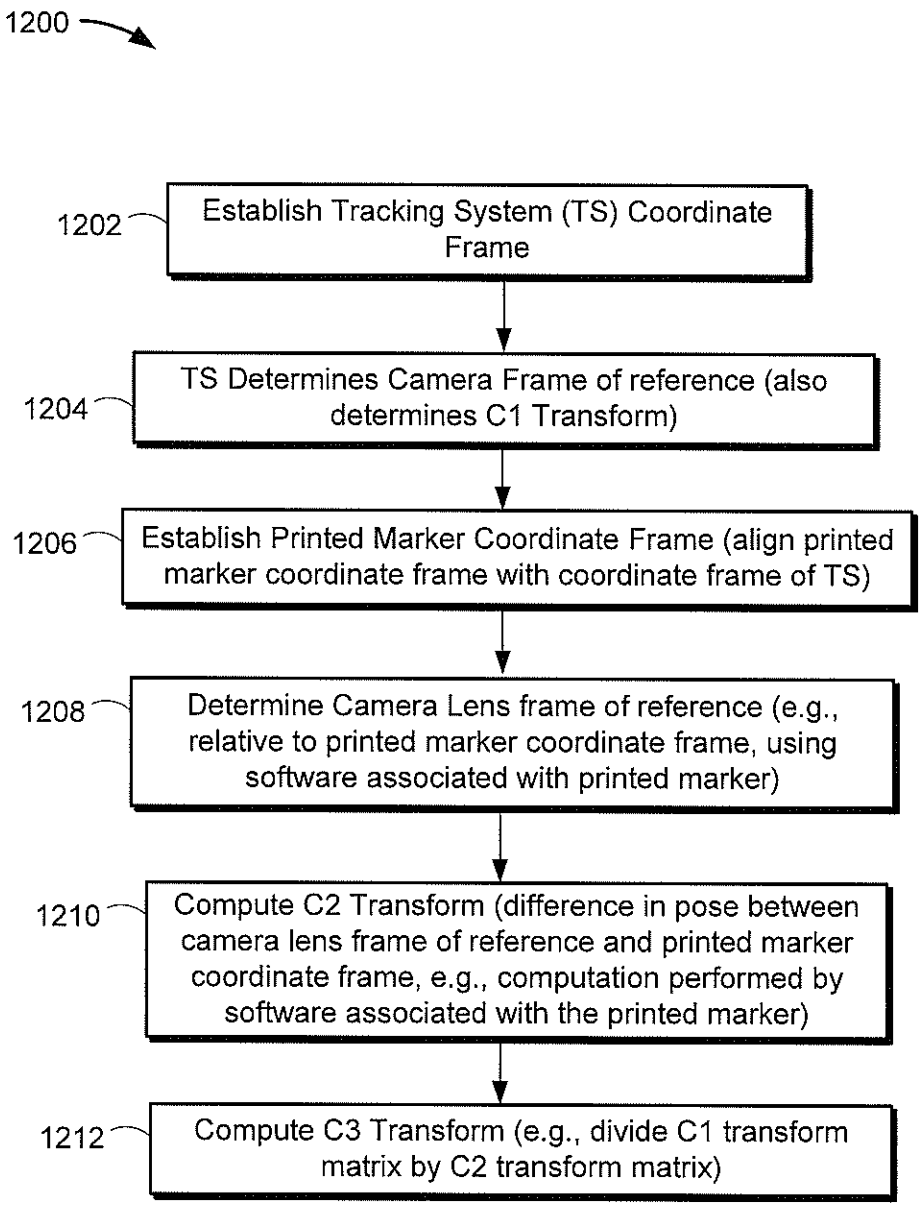
1200
1202
Establish Tracking System (TS) Coordinate Frame
1204
TS Determines Camera Frame of reference (also determines C1 Transform)
1206
Establish Printed Marker Coordinate Frame (align printed marker coordinate frame with coordinate frame of TS)
1208
Determine Camera Lens frame of reference (e.g., relative to printed marker coordinate frame, using software associated with printed marker)
1210
Compute C2 Transform (difference in pose between camera lens frame of reference and printed marker coordinate frame, e.g., computation performed by software associated with the printed marker)
1212
Compute C3 Transform (e.g., divide C1 transform matrix by C2 transform matrix)

Fig. 13

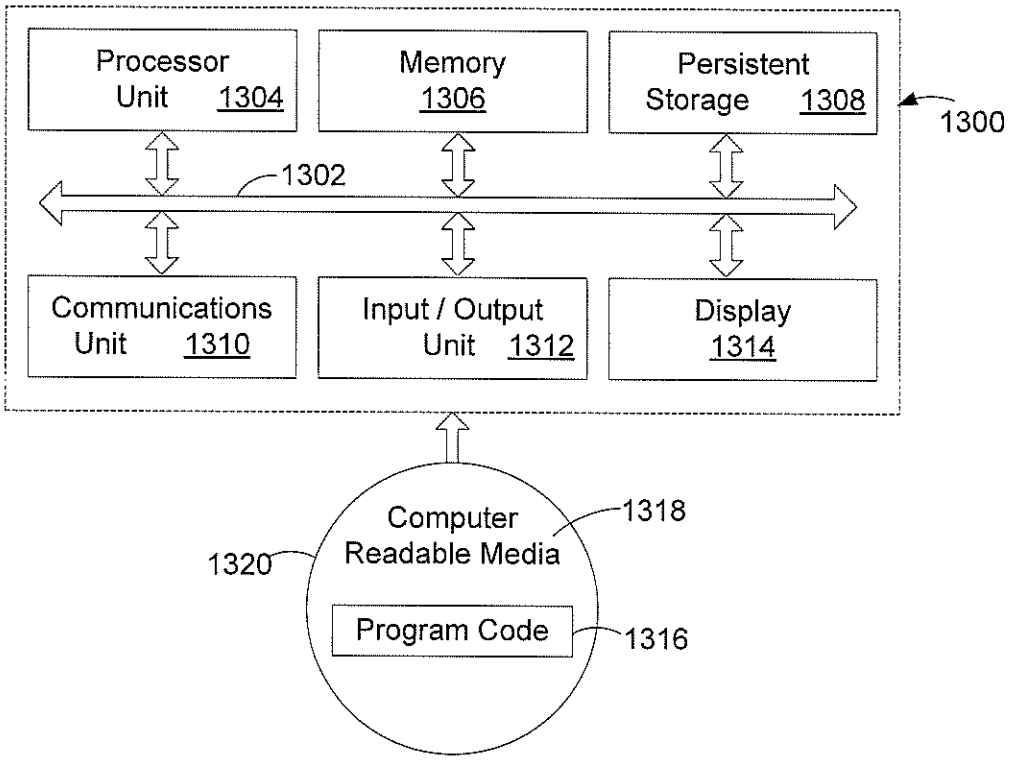
Processor Unit 1304
Memory 1306
Persistent Storage 1308
1300
1302
Communications Unit 1310
Input / Output Unit 1312
Display 1314
Computer Readable Media
1318
1320
Program Code
1316