(12) INTERNATIONAL APPLICATION PUBLISHED UNDER THE PATENT COOPERATION TREATY (PCT)

(19) World Intellectual Property Organization
International Bureau

(43) International Publication Date
29 May 2008 (29.05.2008)

PCT

(10) International Publication Number
WO 2008/061297 A1

(51) International Patent Classification:
F24F 3/00 (2006.01) *F24F 3/052* (2006.01)
F24F 3/06 (2006.01) *F24F 12/00* (2006.01)

(21) International Application Number:
PCT/AU2007/001779

(22) International Filing Date:
19 November 2007 (19.11.2007)

(25) Filing Language: English

(26) Publication Language: English

(30) Priority Data:
2006906435 20 November 2006 (20.11.2006) AU

(71) Applicant *(for all designated States except US)*: **SMAC TECHNOLOGIES PTY LTD** [AU/AU]; Unit 1/56 Sydenham Road, Norwood, South Australia 5067 (AU).

(72) Inventor; and
(75) Inventor/Applicant *(for US only)*: **PHILLIPS, Peter, George** [AU/AU]; 131 Lyons Road, Dernancourt, South Australia 5075 (AU).

(74) Agent: **PHILLIPS ORMONDE & FITZPATRICK**; Level 21, 22 & 23, 367 Collins Street, Melbourne, Victoria 3000 (AU).

(81) Designated States *(unless otherwise indicated, for every kind of national protection available)*: AE, AG, AL, AM, AT, AU, AZ, BA, BB, BG, BH, BR, BW, BY, BZ, CA, CH, CN, CO, CR, CU, CZ, DE, DK, DM, DO, DZ, EC, EE, EG, ES, FI, GB, GD, GE, GH, GM, GT, HN, HR, HU, ID, IL, IN, IS, JP, KE, KG, KM, KN, KP, KR, KZ, LA, LC, LK, LR, LS, LT, LU, LY, MA, MD, ME, MG, MK, MN, MW, MX, MY, MZ, NA, NG, NI, NO, NZ, OM, PG, PH, PL, PT, RO, RS, RU, SC, SD, SE, SG, SK, SL, SM, SV, SY, TJ, TM, TN, TR, TT, TZ, UA, UG, US, UZ, VC, VN, ZA, ZM, ZW.

(84) Designated States *(unless otherwise indicated, for every kind of regional protection available)*: ARIPO (BW, GH, GM, KE, LS, MW, MZ, NA, SD, SL, SZ, TZ, UG, ZM, ZW), Eurasian (AM, AZ, BY, KG, KZ, MD, RU, TJ, TM), European (AT, BE, BG, CH, CY, CZ, DE, DK, EE, ES, FI, FR, GB, GR, HU, IE, IS, IT, LT, LU, LV, MC, MT, NL, PL, PT, RO, SE, SI, SK, TR), OAPI (BF, BJ, CF, CG, CI, CM, GA, GN, GQ, GW, ML, MR, NE, SN, TD, TG).

Published:
— *with international search report*

(54) **Title:** IMPROVED AIR CONDITIONING SYSTEM

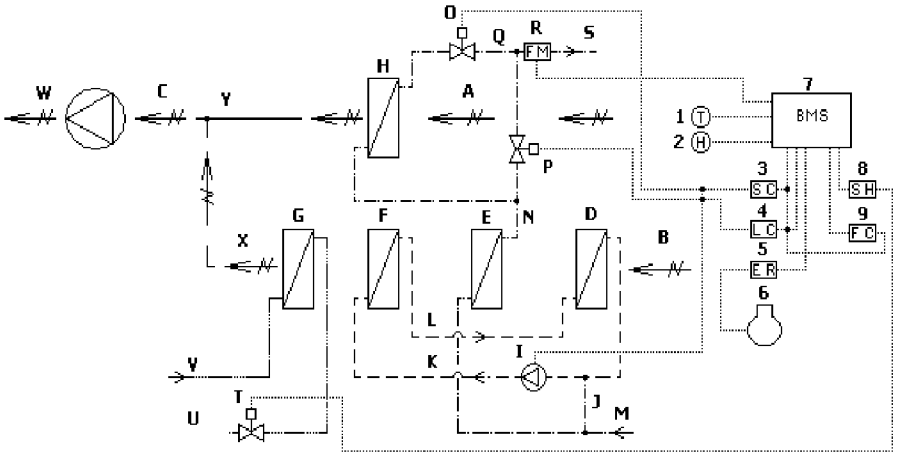

(57) **Abstract:** The present invention provides an air conditioning system that is capable of treating a conditioned space by treating outdoor air from outside the conditioned space and return air from inside the conditioned space, and mixing the outdoor air with the return air to form supply air for the conditioned space, the air conditioning system including: an outdoor air latent cooling treatment stage configured to provide parallel airflow with a return air sensible cooling treatment stage, and a means for mixing outdoor air with return air to form conditioned space supply air, wherein the outdoor air latent cooling treatment stage includes at least a dehumidification heat exchanger, combination pre-cooling and heat reclaim heat exchangers, and a heat transfer pump, and the return air sensible cooling treatment stage includes at least a sensible cooling heat exchanger.

WO 2008/061297 A1