(12) INTERNATIONAL APPLICATION PUBLISHED UNDER THE PATENT COOPERATION TREATY (PCT)

(19) World Intellectual Property Organization
International Bureau

(43) International Publication Date
29 November 2007 (29.11.2007)

PCT

(10) International Publication Number
WO 2007/134794 A1

(51) International Patent Classification:
A61M 15/00 (2006.01) *B05B 11/06* (2006.01)

(21) International Application Number:
PCT/EP2007/004418

(22) International Filing Date: 16 May 2007 (16.05.2007)

(25) Filing Language: English

(26) Publication Language: English

(30) Priority Data:
10 2006 023 657.2 18 May 2006 (18.05.2006) DE
10 2006 043 637.7 18 September 2006 (18.09.2006) DE

(71) Applicant *(for all designated States except US)*: **BOEHRINGER INGELHEIM INTERNATIONAL GMBH** [DE/DE]; Binger Strasse 173, 55216 Ingelheim (DE).

(72) Inventors; and

(75) Inventors/Applicants *(for US only)*: **THOEMMES, Ralf** [DE/DE]; Honschaftweg 2, 47877 Willich (DE). **VON BRUNN, Timo** [DE/DE]; Rotherstrasse 29, 10245 Berlin (DE). **ROHRSCHNEIDER, Marc** [DE/DE]; An der Egge 3, 58093 Hagen (DE). **DUNNE, Stephen, T.** [GB/GB]; The Cottage, Great Finborough, Stowmarket, Suffolk IP14 3AE (GB). **KLAER, Anke** [DE/DE]; An der Stadtmauer 19, 58706 Menden (DE).

(74) Agent: **GESTHUYSEN, VON ROHR & EGGERT**; Huyssenallee 100, 45128 Essen (DE).

(81) Designated States *(unless otherwise indicated, for every kind of national protection available)*: AE, AG, AL, AM, AT, AU, AZ, BA, BB, BG, BH, BR, BW, BY, BZ, CA, CH, CN, CO, CR, CU, CZ, DE, DK, DM, DZ, EC, EE, EG, ES, FI, GB, GD, GE, GH, GM, GT, HN, HR, HU, ID, IL, IN, IS, JP, KE, KG, KM, KN, KP, KR, KZ, LA, LC, LK, LR, LS, LT, LU, LY, MA, MD, MG, MK, MN, MW, MX, MY, MZ, NA, NG, NI, NO, NZ, OM, PG, PH, PL, PT, RO, RS, RU, SC, SD, SE, SG, SK, SL, SM, SV, SY, TJ, TM, TN, TR, TT, TZ, UA, UG, US, UZ, VC, VN, ZA, ZM, ZW.

(84) Designated States *(unless otherwise indicated, for every kind of regional protection available)*: ARIPO (BW, GH, GM, KE, LS, MW, MZ, NA, SD, SL, SZ, TZ, UG, ZM, ZW), Eurasian (AM, AZ, BY, KG, KZ, MD, RU, TJ, TM), European (AT, BE, BG, CH, CY, CZ, DE, DK, EE, ES, FI, FR, GB, GR, HU, IE, IS, IT, LT, LU, LV, MC, MT, NL, PL, PT, RO, SE, SI, SK, TR), OAPI (BF, BJ, CF, CG, CI, CM, GA, GN, GQ, GW, ML, MR, NE, SN, TD, TG).

Published:
— *with international search report*

[Continued on next page]

(54) Title: ATOMISER

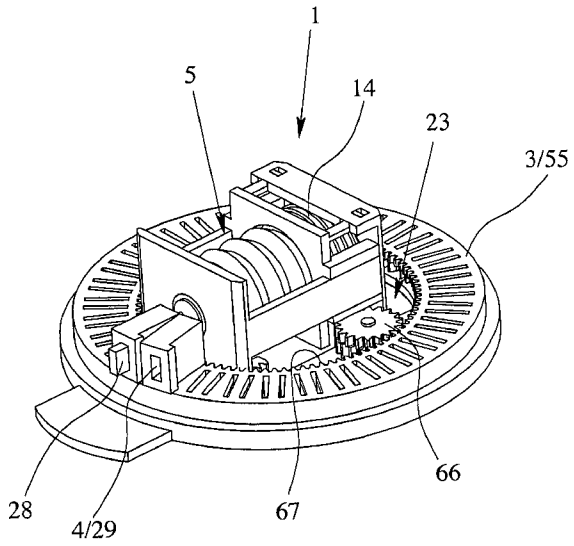

(57) Abstract: An atomiser (1), a reservoir (3) and a method are proposed for the delivery and in particular the atomisation of a formulation (2), particularly a powder. A pump and a spring (14) are arranged inside the annular reservoir, wherein the pump and the spring (14) are moveable radially and in a sliding manner. The pump is actuated by the spring (14) to put air under pressure for discharging powder from the reservoir (3). The reservoir (3) comprises receptacles (4) or cavities each comprising an insert with a respective dose of the formulation (2). The receptacles (4) are constructed as separate parts and/or arranged on a common or annular carrier and/or are sealed separately and/or on its outer circumferential periphery. The spring (14) is tensioned and the air is sucked into the pump. Then, the next receptacle (4) and a connecting element (24) are aligned relative to each other. Finally, the aligned receptacle (4) is pierced by the connecting element for supplying the air.

WO 2007/134794 A1

For two-letter codes and other abbreviations, refer to the "Guidance Notes on Codes and Abbreviations" appearing at the beginning of each regular issue of the PCT Gazette.