1,013,903

PATENT SPECIFICATION

NO DRAWINGS

Inventor: FRANS VEIHKO ELMER VAURIO

1,013,903

Date of Application and filing Complete Specification: June 1, 1962.

No. 21255/62.

Complete Specification Published: Dec. 22, 1965.

© Crown Copyright 1965.

Index at acceptance:—B6 A26X7; B6 C(A12, A25)

Int. Cl.:—B 41 f

COMPLETE SPECIFICATION

The Treatment of Paper and Paper Products

We, CUSTOMARK CORPORATION, a corporation organized and existing under the laws of the State of Wisconsin, United States of America, of Appleton, Wisconsin, United States of America, do hereby declare the invention, for which we pray that a patent may be granted to us, and the method by which it is to be performed, to be particularly described in and by the following statement:—

This invention relates to paper and paper products and to methods of forming pseudo-watermarks.

Particularly in office operations of commercial enterprises it is often desirable to have writing stationery and other forms of business and professional papers watermarked. Oftentimes business trade marks are watermarked for identity and protective purposes and such watermarking serves as an additional means of distinctiveness associated with a particular business enterprise.

The present practice of watermarking is usually performed during the paper-making process by providing rolls with raised designs interposed usually at a point before the wet paper web enters the driers. The fibres in the web are displaced in horizontal position and the paper is then rendered thinner and consequently more transparent in the area of the watermark when viewed under transmitted light. Thus the embossed rolls form the configuration or design of the mark in the damp or wet paper which upon drying remains permanent. After the papermaking and watermarking process is complete the finished paper is cut into sheets of the required size.

Another known method of forming a watermark involves the employment of a band fitted about a roll and carrying the design or configuration of the watermark in relief. The design of the mark in relief on the band is brought into contact with the wet paper web at the web process beyond the Fourdrinier or wet end. At that point the paper is still plastic and compresses readily. The resulting compression of fibres, reducing entrapped air and light refraction, increases the transparency in the area conforming to the configuration of the watermark.

The methods of watermarking described above have several disadvantages. First the commercial paper-making machines are very large and produce paper at a high volume rate. Thus for economic reasons a customer desiring paper bearing a private watermark such as a trademark must purchase a large amount of each kind of paper needed. This of course limits the use of such privately watermarked papers to few but relatively large industrial users or governmental departments as it is obvious that smaller enterprises could not economically purchase and stock a supply which would be sufficient for several years. Secondly, the cost of the embossed or banded rolls for the paper-making machine is obviously extremely high and could therefore not be afforded by smaller industrial users. Thirdly, the cost of setting up the embossed or banded rolls involves both labour and loss of production on the paper-making machinery which must be taken into account in the net cost to the purchaser. Furthermore, among other disadvantages, the purchaser finds that his private watermark is not positioned uniformly in the finished cut stationery unless he assumes the additional labour cost and paper waste involved in constantly positioning relatively the rolled paper and the cut-off knife. While private watermarks may be formed by presently known methods, it is thus clear that orders for paper products so marked

[*Price 4s. 6d.*]

Price 25p

must be large if the cost is to be economically justified, and orders in small quantities are of such high cost as to be rarely justified.

The invention aims to overcome these disadvantages by providing a method whereby what may be termed a "pseudo watermark" can be formed in paper or a paper product. According to the invention the method comprises applying to the paper a curable colourless synthetic resin which is insoluble in water and has a refractive index of 1.4 to 1.7.

The resulting pseudo-watermark possesses for all practical purposes the same general characteristics in use as that of a watermark formed by the earlier processes referred to above. It is cheaper to apply and, of course, permits the mark to be applied at any desired part of a sheet.

The synthetic resin can, and normally would, be carried in a colourless solvent which subsequent to application is removed by evaporation. A curing agent for the synthetic resin can also be incorporated in the composition applied.

A chemical composition suitable for forming a pseudo-watermark must have the ability to mark the paper in a manner to render it more translucent or substantially transparent in the impregnated area. Further the chemical composition employed to form the pseudo-watermark should not alter the surface of the paper adversely. For example it must not render the surface glossy in the impregnated area and must not alter the erasability characteristic of the paper. In addition the chemical composition must withstand aging without substantial discolouration and must not become indistinct through slow migration of the chemicals or otherwise. The area within the pseudo-watermark must accept typing, pencilling, printing and writing inks without adverse effects such as feathering or skipping.

A conventional watermark, from a fundamental viewpoint, possesses a translucency of higher degree in the area of the mark than that possessed by the paper in the unmarked areas. The most common type of conventional watermark appears more transparent than the surrounding unmarked paper when viewed under transmitted light.

After considerable experimental work it was discovered that soluble synthetic resin compositions which were capable of being cured at substantially room temperatures (i.e. 70—90°F.) into insoluble colourless synthetic resin products can be successfully employed to form excellent pseudo-watermarks which possess all of the desired characteristics of watermarks made according to conventional processes.

Broadly speaking, a substantially colourless solution of a curable liquid synthetic resin in an organic solvent wherein the synthetic resin is curable to a substantially insoluble colourless state may be employed to form pseudo-watermarks according to this invention. Such synthetic resins might be cured more rapidly by hardening agents (curing promoters) which may be added to the synthetic resin solution provided that the cured synthetic resins obtained with the aid of hardening agents remain substantially colourless. Commercial sources of some liquid synthetic resins including trade names and manufacturers which were found satisfactory for this invention are shown in Table I below.

TABLE I

Trade Name	Type	Manufacturer
Epon 812	Epoxy	Shell Chemical Co.
Dow D.E.R. 332	Epoxy	Dow Chemical Co.
Dow D.E.R. 661	Epoxy	Dow Chemical Co.
Dow D.E.H. 664	Epoxy	Dow Chemical Co.
Dow D.E.H. 667	Epoxy	Dow Chemical Co.
Maraglas 655	Epoxy	Marblette Corp.
Parez 607	Melamine-formaldehyde	American Cyanamid Co.
Parez 613	Melamine-formaldehyde	American Cyanamid Co.
Epoxide 201	Epoxy	Union Carbide Chemicals Co.
"Paraplex" P 33 (Paraplex is a Registered Trademark)	Polyester	Rohm and Haas Co.
ERL 2795	Epoxy	Bakelite Corp.
"Araldite" 502 (Araldite is a Registered Trademark)	Epoxy	Ciba Co. Inc.
Epiphen ER—823	Phenol-formaldehyde-epoxy	Horden Chemical Co.
Uformite P—240	Butylated urea-formaldehyde	Rohm and Haas Co.
Diepoxide AG—13E	Epoxy	Rohm and Haas Co.
"Epoxol" 7—4 (Epoxol is a Registered Trademark)	Epoxy	Swift and Co.
"Paraplex" P—444A	Polyester	Rohm and Haas Co.
Crestoset M	Ureaformaldehyde	Crest Chemical Corp.
Crestoset MFL	Ureaformaldehyde	Crest Chemical Corp.
Oxiran 2002	Epoxy	Food Machinery and Chemical Corp.

All of the synthethic Resins in Table I are the thermo-setting type. However, it is understood that the two Paraplex synthetic resins are of the polyester type; the Epiphen synthetic resin is understood to be of the phenol-formaldehyde-modified epoxy type; the two Crestoset synthetic resins are understood to be of the modified urea-formaldehyde type and the remaining resins are understood to be of the epoxy class.

Known methods for preparation of epoxy-type resins are numerous as shown, for example, in U.S. Patents Nos. 2,444,333; 2,503,726; 2,575,558; 2,585,115; 2,592,560;

2,694,694; 2,712,535 and 2,864,775. An epoxy-type resin suitable for use in this invention may be prepared by the reaction between Bisphenol A (4,4¹-isopropylidene-diphenol) and epichlorohydrin as indicated below.

The epichlorohydrin and Bisphenol A, usually in a molar proportion of about 10:1, respectively, are placed in a distilling flask, provided with a stirrer and temperature control means, and the flask placed in an inert gas atmosphere such as nitrogen. A reaction period of about 120—150 hours at about 30—50°C. is maintained after which period the temperature is raised to about 80—100°C. and the pressure reduced for the purpose of removing excess epichlorohydrin. The residual intermediate product thus formed is then dissolved in an organic solvent, such as toluene, and an aqueous solution of an inorganic hydroxide (e.g. NaOH) is added slowly with agitation. The amount of inorganic hydroxide added should be slightly in excess of the stoichiometric equivalent of the chlorine present. The resulting mixture is stirred until the reaction is substantially complete. The resinous mass thus obtained is washed with distilled water to remove the inorganic chloride salt formed and excess inorganic hydroxide. The water and toluene are then removed by distillation and the residue is a colourless, clear epoxy type liquid resin which is diglycidyl ether of Bisphenol A. The resin thus obtained is a mixture of component compounds having an average molecular weight of about 340—350 and conforming to the following formula:

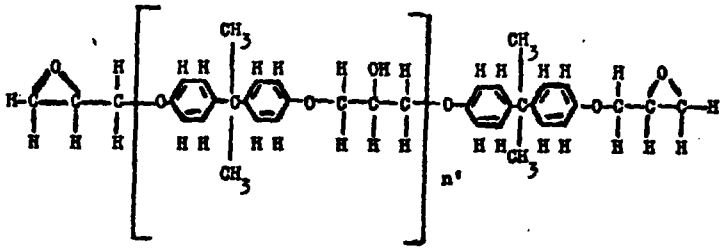

where n^1 is zero to 20 or more.

However, it will be apparent from the average molecular weight of about 340—350 that the major proportion of the resin obtained conforms to the above formula when n^1 equals zero. The epoxy resin obtained has an epoxide equivalent weight of 173—179 and is curable as explained later herein.

The term "epoxide equivalent weight" means the weight in grammes of resin containing one gramme equivalent of epoxide. It is usually (but not necessarily) about one-half the average molecular weight as most of these resins are diepoxides.

In the case of Dow D.E.H. 667 epoxy resin the value of n^1 in the above formula apparently is appreciably above zero as the average molecular weight of this resin is in the range of 3200—4000.

The chemical structure and preparation of most of these proprietary synthetic resins apparently are in the nature of trade secrets and thus not available. However it is believed that one or more of the epoxy-type resins in Table I are essentially diglycidyl ether of para,para¹-isopropylidenediphenol also known as diglycidyl ether of Bis-Phenol A formed by reacting epichlorohydrin and Bisphenol A and having the following structural formula.

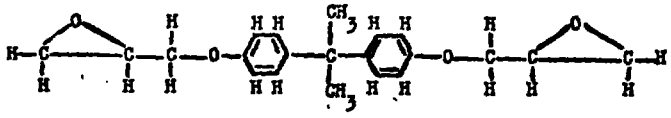

The Epoxide 201 resin is believed to be a diepoxide, derived from peracetic acid, known as 3,4-Epoxy-6-methylcyclohexylmethyl 3,4-epoxy-6-methylcyclohexane-carboxylate of the following structural formula.

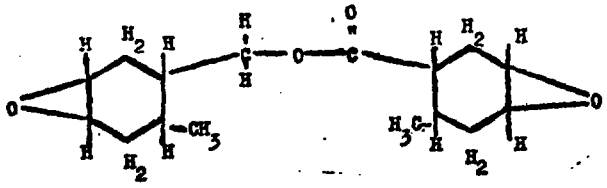

Maraglas 655 is believed to be an epoxy resin made by condensing epichlorohydrin and Bisphenol A.

The Epiphen ER 823 resin is believed to be a phenol-formaldehyde resin and epichlorohydrin condensation product of the following structure:

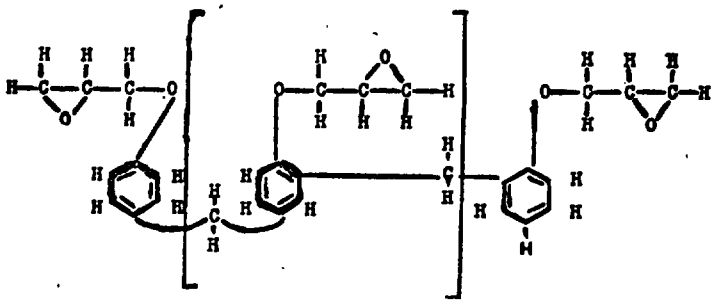

Diepoxide AG—138 is understood to be Bis-epoxydicyclopentyl ether of ethylene glycol. Epoxol (Epoxol is a Registered Trademark) 7—4 is believed to be epoxidised soybean oil further described in U.S. Patent No. 2,919,283.

Oxiran 2802 is understood to be an epoxidised polyolefin, prepared in accordance with U.S. Patents Nos. 2,826,556; 2,833,747; 2,829,131 and 2,829,135.

Aside from the fact that the synthetic resin employed must be substantially colourless for making pseudo-watermarks according to this invention it must also possess an index of refraction within critical limits of 1.4 to 1.7 inclusive and the preferred range is 1.45 to 1.65 as measured at 25°C. by conventional method employing the well known Abbe refractometer. This is predicated on the fact that the index of refraction of most cellulose is 1.53—1.55, as obtained by comparison with various organic fluids measured by an Abbe refractometer, and it is desirable to employ a synthetic resin having an index of refraction reasonably close to that of the cellulose of the paper to which the pseudo-watermark is applied. Thus the closer the index of refraction of the synthetic resin employed is to the index of refraction of the cellulose paper, the greater amount of parallel light can pass through the paper in the impregnated areas of the pseudo watermark, this property (i.e. transparency) is most desirable. Conversely the greater the difference between the indexes of refraction, the greater the amount of diffusion of light. From this it is apparent that if the difference between the indexes of refraction is large the resulting pseudo watermark is faint and may be perceived by the eye with difficulty which of course may not be satisfactory. In all of the examples shown later herein as well as Table I the synthetic resins employed possessed an index of refraction between 1.4 and 1.7.

Although several types of thermosetting synthetic resins of Table I and the synthetic resins of the compositions in the examples herein were capable of producing good pseudo-watermarks according to this invention it was observed that the resins of the epoxy class were somewhat superior for this purpose to the other types. The epoxy resins are known to have the ability to protect other polymers from the adverse affects due to aging which is probably due to their ability to react with acid materials.

Accelerated curing of synthetic resins of the type indicated in Table I can be effected conveniently by compounds known in the trade as "Hardeners" such that the resins will cure at room temperature (70—90°F.) in reduced time. For purposes of the present invention the cure time for these synthetic resins may be as long as two weeks and still be quite satisfactory. Thus short cure time is not necessarily required in this invention. Generally speaking the hardeners may be classed as "curing agents" but not necessarily catalysts. Strictly speaking a true catalyst is not chemically combined with the cured synthetic resin as distinct from a compound which accelerates curing but also becomes chemically combined with the cured synthetic resin. Both types however are referred to as "curing agents" because they accelerate the curing rate. In the present invention numerous curing agents or hardeners were employed with successful results. Some of these curing agents found to be satisfactory are shown in Table II by their commercially available trade names and manufacturers.

TABLE II.

Trade Name	*Manufacturer*
" Versamid " 115 (Versamid is a Registered Trademark)	General Mill Corporation
Dow D.E.R. Exp. Resin X—2654.4	Dow Chemical Company
Dow D.E.R. Exp. Resin X—2673.2	Dow Chemical Company
" Shell " H—2 (Shell is a Registered Trademark)	Shell Chemical Company
DMP—30	Rohm and Haas Co.
Maraset H655	Marblette Corp.
Maraset H555	Marblette Corp.
" Shell " H—1	Shell Chemical Co.
BF_3—400	Harshaw Chemical Company
N-Aminoethyl-Piperamine	Jefferson Chemical Company, Inc.
" Versamid " 125	General Mills Corp.
" Cadox " MDP (Cadox is a Registered Trademark)	Cadet Chemical Co.
ERL 2807	Bakelite Corp.
Hardener 951	CIRA Company, Inc.
Hardener EC 20	Borden Chemical Co.
BF_3-Phenol Complex	Allied Chemical Corp.
Eporal	Roussel Corp.
Hexahydrophthalic anhydride	Allied Chemical Corp.

As in the case of the proprietary resins of Table I, the chemical formulations for most of the curing agents of Table II are not available.The Dow D.E.R. Exp. Resin X—2654.4 is believed to be a polyamine. BF_3—400 is understood to be a complex of boron fluoride with monoethylamine. Eporal is understood to be 4,4¹-diaminodiphenyl sulphone. Maraset H655 is characterised as a tertiary amine. The DMP—30 is understood to be 2,4,6 Tri(dimethyl-aminoethyl)phenol. Other curing agents for epoxy resins found to be satisfactory include diethylene triamine, pyromellitic dianhydride, N-amino-ethyl-piperamine, trimellitic anhydride, dibutyl-tin maleate, diethylene-triamine diphenyl phosphate, N-acetylethanolamine and dipropylene-triamine.

All of the curing agents shown in Table II were found suitable for epoxy-type resins of Table I except that " Cadox " MDP is for polyester-type resins.

There are numerous known curing agents (hardeners) for epoxy-type resins which are described in publications such as " Epoxy Resins " by Lee and Neville (1957) published by McGraw-Hill, New York; and U.S. Patents Nos. 2,510,885; 2,548,447 and 2,643,239. In general, polyamines such as diethylenetriamine, triethylenetetramine and xylylenediamine are good curing agents for epoxy-type resins. It will be seen from the examples shown herein that the amount of hardener may range from as little as 0.2 percent to as high as 60 percent by weight where a solvent is not employed and as low as 0.2 per cent to as high as 30 percent by weight when a solvent is employed.

Curing agents found satisfactory for the urea-formaldehyde and melamine-formaldehyde resins of Table I include maleic anhydride, citric acid, n-butyl acid phosphate, chloroacetic acid, dichloroacetic acid, oxalic acid, mono-n-butyl orthophosphate, sulphuric acid and glacial acetic acid.

In some instances a synthetic resin of Table I with or without a curing agent could be satisfactorily used directly to make the pseudo-watermark of the invention. However for the most part better results could be obtained if a suitable organic solvent was used with the synthetic resin. The solvent employed must, in addition to being a solvent for the resin used, be essentially colourless, non-corrosive to paper, possess a vapour pressure at room temperatures high enough to evaporate with a sufficient rapidity to prevent migration of the resin in paper, possess a vapour pressure low enough to carry the resin into the paper (penetration) prior to evaporation, and, lastly, chemically inert under the conditions employed in this invention.

The solvent preferably should be of the polar type as it appeared that wetting of the paper fibres was better than in the case of non-polar solvents although non-polar solvents can be used as will be seen later. If the viscosity of the solution is too low the penetration into the paper is too rapid causing the pseudo-watermark to be blurred or indistinct. On the other hand if the viscosity of the solution is too high the penetration into the paper is poor and a substantial portion of the resin is deposited on the

surface of the paper sheet resulting a pseudo-watermark which may have a glossy surface. This is not only undesirable in appearance but may render the surface poorly receptive of inks. In such case writing inks, for example, do not adhere to the resin surface resulting in "skipping" as it is known in the trade. Excessive penetration into the paper results in migration of the synthetic resin which tends to make a pseudo watermark blurred or indistinct. Table III below lists may solvents which were found to be satisfactory for this invention.

TABLE III.

Names
Methyl isobutyl ketone
Ethyl lactate
Ethyleneglycol monomethyl ether
Ethyleneglycol dimethyl ether
Ethyleneglycol monoethyl ether
Ethyleneglycol diethyl ether
Ethyleneglycol monobutyl ether
Ethyleneglycol monohexyl ether
Dibutyl phthalate
Diethyleneglycol monoethyl ether
Diethyleneglycol monobutyl ether
Diethyleneglycol diethyl ether
Dimethyl-formamide
Dimethyl-sulphoxide
Triacetin
Ethyleneglycol monoethylether acetate
N-Butyl acetate
Diethyleneglycol monoethylether acetate
Cyclohexanone

In order to evaluate the various compositions applied in carrying out the invention pseudo-watermarks of excellent quality were obtained in the laboratory by hand impregnation. The hand impregnation was accomplished by depositing a small metered amount (e.g. 1 to 2 grammes) of the composition on the surface of a foot-square piece of one-quarter inch thick plate glass. The liquid composition was spread uniformly over the glass surface with a conventional handproofer consisting of an engraved roll bearing 75 depressions per inch and fitted with a handle. A die or hand stamp of rubber-like material having inscribed in relief on the face thereof a design or configuration conforming to a typical watermark was pressed against the wet film of the composition and then stamped on the paper sheet. The pseudo-watermarked paper sheet was allowed to dry and cure at ambient room temperatures (70—90°F.) and then examined. Thus pseudo-watermarks were applied to paper sheets much in the same manner as one would rubber-stamp paper using an inked pad.

Where curing agents were employed the time required for the resin to cure at ambient room temperatures to a degree sufficient to resist solution in 95% ethanol or acetone varied somewhat depending on the particular resin used. However all synthetic resins with curing agents of the compositions employed in the various examples shown later herein cured satisfactorily with reference to ethanol- or acetone-solubility in periods of less than two weeks at ambient room temperatures.

Testing for cure of the resin in the pseudo-watermark made by laboratory hand stamping as above described was made by agitating the paper sheet bearing the pseudo watermark in the solvent (e.g. ethanol) for a period of two minutes at room temperature. If the solvent extracted the resin the pseudo-watermark disappeared. Where, on the other hand, the pseudo-watermark remained after agitation in the solvent this indicated that the resin had cured to a solvent-resistant state.

The two-week curing-time requirement is generally not objectionable because packing and wrapping operations for paper stationery together with unpacking and use by the customer usually is at least this long. Of course if desired the curing rate of the resin can be greatly accelerated by heating the pseudo-watermarked paper to 70—90°C. for a period of about one hour without discolouring the paper.

By way of illustration of the invention, excellent pseudo-watermarks were obtained by laboratory hand impregnation, as above described, employing the compositions of the following examples, the stated proportions being in terms of weight.

EXAMPLE 1.

Dow D.E.R. 332	60 grammes	33%
Dow Hardener X—2654.4	12 grammes	7%
Ethyleneglycol monomethyl ether	108 grammes	60%

EXAMPLE 2.

Dow D.E.R. 332	100 grammes	58%
Dow Hardener X—2654.4	20 grammes	12%
Ethyleneglycol monomethyl ether	51.4 grammes	30%

EXAMPLE 3.

Dow D.E.R. 332	100 grammes	66%
Dow Hardener X—2654.4	20 grammes	13%
Ethyleneglycol monomethyl ether	32 grammes	21%

EXAMPLE 4.

Dow D.E.R. 332	60 grammes	33%
Dow Hardener X—2654.4	12 grammes	7%
Diethyleneglycol monoethyl ether	108 grammes	60%

EXAMPLE 5.

Dow D.E.R. 332	100 grammes	58%
Dow Hardener X—2654.4	20 grammes	12%
Diethyleneglycol monoethyl ether	51.4 grammes	30%

EXAMPLE 6.

Dow D.E.R. 332	60 grammes	33%
Dow Hardener X—2654.4	12 grammes	7%
Diethyleneglycol diethyl ether	108 grammes	60%

EXAMPLE 7.

Dow D.E.R. 332	100 grammes	58%
Dow Hardener X—2654.4	20 grammes	12%
Diethyleneglycol diethyl ether	51.4 grammes	30%

EXAMPLE 8.

Dow D.E.R. 332	60 grammes	33%
Dow Hardener X—2654.4	12 grammes	7%
Diethyleneglycol monobutyl ether	108 grammes	60%

EXAMPLE 9.

Dow D.E.R. 332	100 grammes	58%
Dow Hardener X—2654.4	20 grammes	12%
Diethyleneglycol monobutyl ether	51.4 grammes	30%

EXAMPLE 10.

Dow D.E.R. 332	60 grammes	33%
Dow Hardener X—2654.4	12 grammes	7%
Ethyleneglycol monoethylether acetate	108 grammes	60%

EXAMPLE 11.

Dow D.E.R. 332	100 grammes	58%
Dow Hardener X—2654.4	20 grammes	12%
Ethyleneglycol monoethylether acetate	51.4 grammes	30%

EXAMPLE 12.

Dow D.E.R. 332	60 grammes	33%
Dow Hardener X—2654.4	12 grammes	7%
Methyl isobutyl ketone	108 grammes	60%

EXAMPLE 13.

Dow D.E.R. 332	100 grammes	58%
Dow Hardener X—2654.4	20 grammes	12%
Methyl isobutyl ketone	51.4 grammes	30%

EXAMPLE 14.

Dow D.E.R. 332	60 grammes	33%
Dow Hardener X—2654.4	12 grammes	7%
Dimethyl-formamide	108 grammes	60%

EXAMPLE 15.

Dow D.E.R. 332	100 grammes	58%
Dow Hardener X—2654.4	20 grammes	12%
Dimethyl-formamide	51.4 grammes	30%

EXAMPLE 16.

Dow D.E.R. 332	60 grammes	33%
Dow Hardener X—2654.4	12 grammes	7%
Dimethyl-sulphoxide	108 grammes	60%

EXAMPLE 17.

Dow D.E.R. 332	100 grammes 58%
Dow Hardener X—2654.4	20 grammes 12%
Dimethyl-sulphoxide	51.4 grammes 30%

EXAMPLE 18.

Dow D.E.R. 332	60 grammes 33%
Dow Hardener X—2654.4	12 grammes 7%
Ethyleneglycol monoethyl ether	108 grammes 60%

EXAMPLE 19.

Dow D.E.R. 332	100 grammes 58%
Dow Hardener X—2654.4	20 grammes 12%
Ethyleneglycol monoethyl ether	51.4 grammes 30%

EXAMPLE 20.

Dow D.E.R. 332	60 grammes 33%
Dow Hardener X—2654.4	12 grammes 7%
Ethyelneglycol monomethyl ether	108 grammes 60%

EXAMPLE 21.

Dow D.E.R. 332	100 grammes 58%
Dow Hardener X—2654.4	20 grammes 12%
Ethyleneglycol monomethyl ether	51.4 grammes 30%

EXAMPLE 22.

Dow D.E.R. 332	60 grammes 33%
Dow Hardener X—2654.4	12 grammes 7%
Ethyleneglycol monobutyl ether	108 grammes 60%

EXAMPLE 23.

Dow D.E.H 332	100 grammes 58%
Dow Hardener X—2654.4	20 grammes 12%
Ethyleneglycol monobutyl ether	51.4 grammes 30%

EXAMPLE 24.

Dow D.E.R. 332	60 grammes 33%
Dow Hardener X—2654.4	12 grammes 7%
Ethyleneglycol monohexyl ether	108 grammes 60%

EXAMPLE 25.

Dow D.E.R. 332	100 grammes 58%
Dow Hardener X—2654.4	20 grammes 12%
Ethyleneglycol monohexyl ether	51.4 grammes 30%

The foregoing examples illustrate the wide range of solvent content in the compositions which can be satisfactorily employed. In some instances a solvent was omitted with satisfactory results as shown later herein and in other instances a solvent concentration as high as 80% produced satisfactory results. Of course in commercial operations the particular solvent used and content thereof in the composition for best results will depend to some extent on the type of commercial printing press used and conditions of operation as well as the characteristics of the paper to which a pseudo watermark is to be imprinted.

The following group of examples illustrates several compositions all of which produced excellent pseudo-watermarks according to this invention. Some of these compositions have been employed using commercial printing machinery and in each ease excellent pseudo-watermarks were obtained.

EXAMPLE 26.

Epon 812 (resin)	57.1%
"Versamid" 115 (hardener)	28.6%
Diethyleneglycol monomethyl ether	14.3%

EXAMPLE 27.

Dow D.E.R. 332 (resin)	44.5%
Dow Hardener X—2654.4	11.0%
Diethyleneglycol monomethyl ether	44.5%

EXAMPLE 28.

Dow D.E.R. 332 (resin)	40.0%
Dow Hardener X—2654.4	20.0%
Diethyleneglycol monomethyl ether	40.0%

EXAMPLE 29.

Dow D.E.R. 332 (resin)	33.4%
Dow Hardener X—2654.4	33.3%
Diethyleneglycol monomethyl ether	33.3%

EXAMPLE 30.

Maraglas 655 (resin)	40.0%
Dow Hardener X—2654.4	20.0%
Diethyleneglycol monomethyl ether	40.0%

EXAMPLE 31.

Maraglas 655 (resin)	66.7%
"Shell" H—2 (hardener)	33.3%

EXAMPLE 32.

Epon 812 (resin)	50.0%
"Shell" H—2 (hardener)	50.0%

EXAMPLE 33.

Epon 812 (resin)	40.0%
Dow Hardener X—2654.4	20.0%
Diethyleneglycol monomethyl ether	40.0%

EXAMPLE 34.

Epon 812 (resin)	33.4%
Dow Hardener X—2654.4	33.3%
Diethyleneglycol monomethyl ether	33.3%

EXAMPLE 35.

Epon 812 (resin)	90.9%
DMP—30	9.1%

EXAMPLE 36.

Dow D.E.R. 332 (resin)	65.6%
Ethylene triamine (hardener)	1.6%
Diethyleneglycol monomethyl ether	32.8%

EXAMPLE 37.

Dow D.E.R. 332	41.7%
Dow Hardener X—2654.4	16.6%
Diethyleneglycol monomethyl ether	41.7%

EXAMPLE 38.

Dow D.E.R. 332 (resin)	43.5%
Dow Hardener X—2654.4	13.0%
Diethyleneglycol monomethyl ether	43.5%

EXAMPLE 39.

Dow D.E.R. 332 (resin)	45.5%
Dow Hardener X—2654.4	9.0%
Diethyleneglycol monomethyl ether	45.5%

EXAMPLE 40.

Dow D.E.R. 332 (resin)	47.6%
Dow Hardener X—2654.4	4.8%
Diethyleneglycol monomethyl ether	47.6%

EXAMPLE 41.

Dow D.E.R. 332 (resin)	40.0%
Pyromellitic anhydride (hardener)	20.0%
Diethyleneglycol monomethyl ether	40.0%

EXAMPLE 42.

Parez 607 (resin)	33.3%
Diethyleneglycol monomethyl ether	66.7%

EXAMPLE 43.

Dow D.E.R. 332 (resin)	49.9%
Dow Hardener X—2654.4	0.2%
Diethyleneglycol monomethyl ether	49.9%

EXAMPLE 44.

Dow D.E.R. 332 (resin)	48.9%
Dow Hardener X—2654.4	2.2%
Diethyleneglycol monomethyl ether	48.9%

EXAMPLE 45.

ERL 2795 (resin)	99.5%
ERL 2807 (hardener)	0.5%

EXAMPLE 46.

ERL 2795 (resin)	97.6%
ERL 2807 (hardener)	2.4%

EXAMPLE 47.

ERL 2795 (resin)	95.2%
ERL 2807 (hardener)	4.8%

EXAMPLE 48.

Maraglas 655 (resin)	57.4%
Dow Hardener X—2654.4	14.4%
Diethyleneglycol monomethyl ether	28.2%

EXAMPLE 49.

Maraglas 655 (resin)	44.5%
Dow Hardener X—2654.4	11.0%
Diethyleneglycol monomethyl ether	44.5%

EXAMPLE 50.

Maraglas 655 (resin)	99.0%
"Shell" H—1 (hardener)	1.0%

EXAMPLE 51.

Maraglas 655 (resin)	45.8%
"Shell" H—1 (hardener)	2.4%
Diethyleneglycol monomethyl ether	48.8%

EXAMPLE 52.

Maraglas 655 (resin)	62.6%
"Shell" H—1 (hardener)	6.2%
Diethyleneglycol monomethyl ether	31.2%

EXAMPLE 53.

Maraglas 655 (resin)	50.0%
"Shell" H—1 (hardener)	25.0%
Diethyleneglycol monomethyl ether	25.0%

EXAMPLE 54.

Maraglas 655 (resin)	64.6%
"Shell" H—2 (hardener)	3.2%
Diethyleneglycol monomethyl ether	32.2%

EXAMPLE 55.

Maraglas 655 (resin)	62.6%
"Shell" H—2 (hardener)	6.2%
Diethyleneglycol monomethyl ether	31.2%

EXAMPLE 56.

Maraglas 655 (resin)	50.0%
"Shell" H—2	25.0%
Diethyleneglycol monomethyl ether	25.0%

EXAMPLE 57.

Epon 812 (resin)	66.7%
"Shell" H—2 (hardener)	33.3%

EXAMPLE 58.

Epon 812 (resin)	45.4%
Dow Hardener X—2654.4	9.2%
Diethyleneglycol monomethyl ether	45.4%

EXAMPLE 59.

Epon 812 (resin)	40.0%
Dow Hardener X—2654.4	20.0%
Diethyleneglycol monomethyl ether	40.0%

EXAMPLE 60.

Epon 812 (resin)	95.2%
DMP 30 (hardener)	4.8%

EXAMPLE 61.

Epon 812 (resin)	83.3%
DMP 30 (hardener)	16.7%

EXAMPLE 62.

"Araldite" 502 (resin)	74.1%
Hardener 951	7.4%
Diethyleneglycol monomethyl ether	18.5%

EXAMPLE 63.

Epiphen ER—823 (resin)	45.5%
Hardener EC—20	9.0%
Diethyleneglycol monomethyl ether	45.5%

EXAMPLE 64.

Parez 613 (resin)	30.4%
Dow D.E.R. 332 (resin)	21.9%
Dow Hardener X—1654.4	10.9%
Chloroacetic acid (hardener)	2.2%
Diethyleneglycol monomethyl ether	34.6%

EXAMPLE 65.

Maraglas 655 (resin)	93.0%
Maraset Hardener H555	7.0%

EXAMPLE 66.

Maraglas 655 (resin)	90.9%
Maraset Hardener H555	9.1%

EXAMPLE 67.

Maraglas 655 (resin)	77%
Maraset Hardener H555	23%

EXAMPLE 68.

Maraglas 655 (resin)	50%
Maraset Hardener H555	50%

EXAMPLE 69.

Dow D.E.R. 332 (resin)	47.6%
Pyromellitic Anhydride	4.8%
Diethyleneglycol monomethyl ether	47.6%

EXAMPLE 70.

Dow D.E.R. 332 (resin)	40%
Pyromellitic Anhydride	20%
Diethyleneglycol monomethyl ether	40%

EXAMPLE 71.

Dow D.E.R. 332 (resin)	56%
BF_3—400	4%
Diethyleneglycol monomethyl ether	40%

EXAMPLE 72.

Dow D.E.R. 332 (resin)	69%
N-Aminoethyl-Piperazine	10%
Diethyleneglycol monomethyl ether	21%

EXAMPLE 73.

Dow D.E.R. 332 (resin)	72%
N-Aminoethyl-Piperazine	7%
Diethyleneglycol monomethyl ether	21%

EXAMPLE 74.

Dow D.E.R. 332 (resin)	66.7%
N-Aminoethyl-Piperazine	13.3%
Diethyleneglycol monomethyl ether	20.0%

EXAMPLE 75.

Dow D.E.R. 332 (resin)	64.6%
N-Aminoethyl-Piperazine	16.1%
Diethyleneglycol monomethyl ether	19.3%

EXAMPLE 76.

Dow D.E.R. 332 (resin)	45.5%
Eporal (hardener)	9.0%
Diethyleneglycol monomethyl ether	45.5%

EXAMPLE 77.

Dow D.E.R. 332 (resin)	40%
Eporal (hardener)	20%
Diethyleneglycol monomethyl ether	40%

EXAMPLE 78.

Dow D.E.R. 332 (resin)	58.6%
BF_3-Phenol Complex (hardener)	0.3%
Diethyleneglycol monomethyl ether	41.1%

EXAMPLE 79.

Dow D.E.R. 332 (resin)	35.5%
Hexahydrophthalic Anhydride (hardener)	28.8%
BF_3-Phenol Complex (hardener)	0.2%
Diethyleneglycol monomethyl ether	35.5%

EXAMPLE 80.

Dow D.E.R. 332 (resin)	41.5%
Hexahydrophthalic Anhydride (hardener)	16.7%
BF_3-Phenol Complex (hardener)	0.3%
Diethyleneglycol monomethyl ether	41.5%

EXAMPLE 81.

Dow D.E.R. 332 (resin)	45.3%
BF_3-Phenol Complex (hardener)	0.3%
Hexahydrophthalic Anhydride (hardener)	9.1%
Diethyleneglycol monomethyl ether	45.3%

EXAMPLE 82.

Dow D.E.R. 332 (resin)	58.6%
BF_3-Piperidine Complex (hardener)	0.3%
Diethyleneglycol monomethyl ether	41.1%

EXAMPLE 83.

Dow D.E.R. 332 (resin)	58.5%
BF_3-Piperidine Complex (hardener)	0.6%
Diethyleneglycol monomethyl ether	40.9%

EXAMPLE 84.

Dow D.E.R. 332 (resin)	58.3%
BF_3-Piperidine Complex (hardener)	0.9%
Diethyleneglycol monomethyl ether	40.8%

EXAMPLE 85.

Dow D.E.R. 332 (resin)	57.8%
BF_3-Piperidine Complex (hardener)	1.7%
Diethyleneglycol monomethyl ether	40.5%

EXAMPLE 86.

Dow D.E.R. 332 (resin)	55.6%
BF_3-Piperidine Complex (hardener)	5.6%
Diethyleneglycol monomethyl ether	38.8%

In the preceding five examples the BF_3-piperidine complex is commercially available but may be prepared by bubbling boron trifluoride into piperidine at room temperature.

EXAMPLE 87.

Dow D.E.R. 332 (resin)	58.3%
BF_3-Phenol Complex (hardener)	0.8%
Diethyleneglycol monomethyl ether	40.9%

EXAMPLE 88.

Dow D.E.R. 332 (resin)	58.2%
BF_3-Phenol Complex (hardener)	1.2%
Diethyleneglycol monomethyl ether	40.6%

EXAMPLE 89.

Dow D.E.R. 332 (resin)	33%
Crestoset M (resin)	33%
BF_3-Phenol Complex (hardener)	1%
Diethyleneglycol monomethyl ether	33%

EXAMPLE 90.

Dow D.E.R. 661 (resin)	29.6%
Dow D.E.R. X—2673.2 (hardener)	7.4%
N-Aminomethyl-Piperamine	3.0%
Diethyleneglycol monomethyl ether	60.0%

EXAMPLE 91.

Dow D.E.R. 664 (resin)	29.6%
Dow D.E.R. X—2673.2 (hardener)	7.4%
N-Aminomethyl-Piperamine	3.0%
Diethyleneglycol monomethyl ether	60.0%

EXAMPLE 92.

Dow D.E.R. 667 (resin)	29.6%
Dow D.E.R. X—2673.2 (hardener)	7.4%
N-Aminoethyl-Piperamine	3.0%
Diethyleneglycol monomethyl ether	60.0%

EXAMPLE 93.

Crestoset M (resin)	50%
Oxalic Acid (hardener)	5%
Diethyleneglycol monomethyl ether	45%

EXAMPLE 94.

Crestoset M (resin)	50%
Oxalic Acid (hardener)	5%
Diethyleneglycol monobutyl ether	45%

EXAMPLE 95.

Crestoset M (resin)	50%
Oxalic Acid (hardener)	5%
Diacetin	45%

EXAMPLE 96.

Crestoset M (Resin)	50%
Oxalic Acid (hardener)	5%
Monacetin	45%

EXAMPLE 97.

Crestoset M (resin)	50%
Oxalic Acid (hardener)	5%
Dipropyleneglycol	45%

EXAMPLE 98.

Crestoset M (resin)	50%
Citric Acid (hardener)	5%
Diethyleneglycol monomethyl ether	45%

EXAMPLE 99.

Crestoset M (resin)	50%
Citric Acid (hardener)	5%
Diethyleneglycol monobutyl ether	45%

EXAMPLE 100.

Crestoset M (resin)	50%
Citric Acid (hardener)	5%
Diacetin	45%

EXAMPLE 101.

Crestoset M (resin)	50%
Citric Acid	5%
Monacetin	45%

EXAMPLE 102.

Crestoset M (resin)	50%
Citric Acid	5%
Dipropyleneglycol	45%

EXAMPLE 103.

Crestoset M (resin)	38.4%
Phosphoric Acid	3.8%
Diethyleneglycol monomethyl ether	57.8%

EXAMPLE 104.

Crestoset M (resin)	62.5%
Citric Acid (hardener)	6.2%
Diethyleneglycol monomethyl ether	31.3%

EXAMPLE 105.

Crestoset M (resin)	43.4%
Citric Acid (hardener)	4.3%
Diacetin	52.3%

EXAMPLE 106.

Crestoset M (resin)	56.2%
Citric Acid (hardener)	5.6%
Monacetin	38.2%

EXAMPLE 107.

Crestoset M (resin)	43.4%
Citric Acid (hardener)	4.3%
Dipropylene Glycol	52.3%

EXAMPLE 108.

Crestoset M (resin)	50%
Oxalic Acid	5%
Ethyleneglycol monohexyl ether	45%

In all of the preceding examples a curing agent (hardener) was employed to cure the resin but in some instances a solvent was omitted. As mentioned previously a solvent is not always required. Some of the resins require the presence of a solvent and the amount of solvent employed is governed to an appreciable extent by the impregnating characteristics of the paper to be pseudo-watermarked in accordance with this invention.

In the following examples a curing agent is omitted.

The following examples illustrate compositions the use of which use results in excellent pseudo-watermarks according to this invention without employing curing agents.

EXAMPLE 109.

Dow D.E.R. 332 (resin)	65%
Diethyleneglycol monomethyl ether	35%

EXAMPLE 110.

Dow D.E.R. 332 (resin)	80%
Diethyleneglycol monomethyl ether	20%

EXAMPLE 111.

Dow D.E.R. 332 (resin)	30%
Cyclohexanone	70%

EXAMPLE 112.

Dow D.E.R. 332 (resin)	80%
Cyclohexanone	20%

EXAMPLE 113.

Dow D.E.R. 332 (resin)	80%
Monoacetin	20%

EXAMPLE 114.

Dow D.E.R. 332 (resin)	80%
Diacetin	20%

EXAMPLE 115.

Dow D.E.R. 332 (resin)	30%
Triacetin	70%

EXAMPLE 116.

Dow D.E.R. 332 (resin)	80%
Diethyleneglycol monohexyl ether	20%

EXAMPLE 117.

Dow D.E.R. 332 (resin)	90%
Dimethyl-sulphoxide	10%

EXAMPLE 118.

Dow D.E.R. 332 (resin)	80%
Dibutyl phthalate	20%

EXAMPLE 119.

Dow D.E.R. 332 (resin)	40%
Diethyleneglycol monobutyl ether	60%

EXAMPLE 120.

Dow D.E.R. 332 (resin)	40%
Dimethyl formamide	60%

EXAMPLE 121.

Dow D.E.R. 332 (resin)	80%
Dimethyl formamide	20%

EXAMPLE 122.

Dow D.E.R. 332 (resin)	50%
Ethyleneglycol monobutyl ether	50%

EXAMPLE 123.

Dow D.E.R. 332 (resin)	80%
Ethyleneglycol monobutyl ether	20%

EXAMPLE 124.

Dow D.E.R. 332 (resin)	30%
Ethyleneglycol monoethyl ether	70%

EXAMPLE 125.

Dow D.E.R. 332 (resin)	90%
Ethyleneglycol monoethyl ether	10%

EXAMPLE 126.

Dow D.E.R. 332 (resin)	80%
Ethyleneglycol monohexyl ether	20%

EXAMPLE 127.

Dow D.E.R. 332 (resin)	30%
Ethyleneglycol monomethyl ether	70%

EXAMPLE 128.

Dow D.E.R. 332 (resin)	90%
Ethyleneglycol monomethyl ether	10%

EXAMPLE 129.

Dow D.E.R. 332 (resin)	70%
Ethyl lactate	30%

EXAMPLE 130.

Dow D.E.R. 332 (resin)	30%
Toluene	70%

EXAMPLE 131.

Dow D.E.R. 332 (resin)	80%
Toluene	20%

EXAMPLE 132.

Dow D.E.R. 332 (resin)	30%
Tricresyl phosphate	70%

EXAMPLE 133.

Dow D.E.R. 332 (resin)	70%
Tricresyl phosphate	30%

EXAMPLE 134.

Dow D.E.R. 332 (resin)	30%
Xylene	70%

EXAMPLE 135.

Dow D.E.R. 332 (resin)	80%
Xylene	20%

EXAMPLE 136.

Dow D.E.R. 332 (resin)	100%*

*Distinctness of the pseudo-watermark fair-to-good. Not as good as when solvent is present.

EXAMPLE 137.

Crestoset N (resin)	55%
Dimethylacetamide	45%

EXAMPLE 138.

Dow D.E.R. 667 (resin)	60%
Diethyleneglycol monomethyl ether	40%

EXAMPLE 139.

Crestoset N (resin)	55%
Diacetin	45%

EXAMPLE 140.

Crestoset N (resin)	55%
Diethyleneglycol monomethyl ether	45%

EXAMPLE 141.

Crestoset N (resin)	55%
Monacetin	45%

EXAMPLE 142.

Crestoset N (resin)	55%
Dipropyleneglycol	45%

In the above examples it is clear that not only a wide number of solvents can be used but also the proportional amount may range from zero to as high as 80% although the range of 10 to 70% is more preferable.

In all of these examples the blank paper product employed in applying the compositions to form pseudo-watermarks according to this invention was of the bond grade consisting of 25% cotton and 75% wood-pulp. The apparent density of the blank paper stock was 5.0 and its thickness 4 mils. The resulting pseudo-watermarks possessed a high degree of transparency. Other types of paper sheet products such as commercial mineograph, tracing and even newsprint were successfully pseudo-watermarked with many of these compositions according to the invention.

In the paper industry the terms "opaque" and "semi-opaque" can refer to varying levels of opacity, depending on the specific type of paper under discussion. For purposes herein, more definite meanings can be given these terms by the following explanation.

In the writing paper field, trade practice classifies an "opaque" sheet of bond paper as one of a standard weight (500 sheets cut 17 inches by 22 inches, weighing between 19.5 lbs. and 20.5 lbs.) having a TAPPI (Technical Association of the Pulp and Paper Industry) opacity in excess of 87%, this percentage being the reciprocal of the transmission of monochromatic light passing through the paper.

A so-called "semi-opaque" sheet is understood in trade practice as one of standard weight (500 sheets 17 inches by 22 inches weighing between 19.5 and 20.5 lbs) having a TAPPI opacity between 87% and 65%.

Writing papers having a TAPPI opacity less than 65% are often referred to as "transparent". It will suffice to say that the lower the TAPPI opacity, the more often the trade refers to "transparency", and the closer the opacity is to 65%, the more the trade uses the term "translucent". Translucent papers usually retain the more common characteristics of bond papers, such as formation and brightness, whereas transparent sheets most often have a more uniformly transulcent fibre mass with considerably less brightness. This holds true whether the paper under discussion is made entirely of chemical wood pulp, or of a blend of chemical wood pulp and cotton or linen fibres.

It has thus been shown that ordinary grades of stationary can be provided with a pseudo-watermark by a curable chemical impregnation according to this invention by means of a simple hand method or commercial printing machines. In commercial printing machines the compositions of this invention are employed instead of printing inks and may be applied in a similar manner. From this it can be readly appreciated that small quantities of paper may be provided with a pseudo-watermark of selected configuration or design at costs which meet requirements of smaller volume customers and thereby making available, economically, a long sought paper product.

Based on the weight of paper the amount of curable impregnating composition of this invention, in terms of percentage by weight, may vary due to the density of the paper and its impregnating characteristics. Therefore an amount sufficient to reduce the TAPPI opacity to below 65% is employed when working with translucent paper. In relation to the bond paper used in the examples, an impregnation in the amount of 15% or less by weight of the synthetic resin based on the weight of the paper within the area impregnated gave satisfactory results.

WHAT WE CLAIM IS:—

1. A method of treating paper or a paper product so as to produce a pseudo-watermark in it which method comprises applying to the paper a curable colourless synthetic resin which is insoluble in water and has a refractive index of 1.4 to 1.7.

2. A method according to claim 1, in which the synthetic resin is an epoxy resin.

3. A method according to claim 1, in which the synthetic resin is a melamine-formaldehyde resin.

4. A method according to claim 1, in which the synthetic resin is a urea-formaldehyde resin.

5. A method according to claim 1, in which the synthetic resin is a polyester resin.

6. A method according to any preceding claim, in which the synthetic resin is applied in a composition containing up to 80% by weight of an organic solvent and in which the solvent is removed by evaporation.

7. A method according to any preceding claim, in which the synthetic resin is applied in a composition containing up to 60% by weight of a substantially colourless curing agent for the synthetic resin.

In the above examples it is clear that not only a wide number of solvents can be used but also the proportional amount may range from zero to as high as 80% although the range of 10 to 70% is more preferable.

In all of these examples the blank paper product employed in applying the compositions to form pseudo-watermarks according to this invention was of the bond grade consisting of 25% cotton and 75% wood-pulp. The apparent density of the blank paper stock was 5.0 and its thickness 4 mils. The resulting pseudo-watermarks possessed a high degree of transparency. Other types of paper sheet products such as commercial mineograph, tracing and even newsprint were successfully pseudo-watermarked with many of these compositions according to the invention.

In the paper industry the terms "opaque" and "semi-opaque" can refer to varying levels of opacity, depending on the specific type of paper under discussion. For purposes herein, more definite meanings can be given these terms by the following explanation.

In the writing paper field, trade practice classifies an "opaque" sheet of bond paper as one of a standard weight (500 sheets cut 17 inches by 22 inches, weighing between 19.5 lbs. and 20.5 lbs.) having a TAPPI (Technical Association of the Pulp and Paper Industry) opacity in excess of 87%, this percentage being the reciprocal of the transmission of monochromatic light passing through the paper.

A so-called "semi-opaque" sheet is understood in trade practice as one of standard weight (500 sheets 17 inches by 22 inches weighing between 19.5 and 20.5 lbs) having a TAPPI opacity between 87% and 65%.

Writing papers having a TAPPI opacity less than 65% are often referred to as "transparent". It will suffice to say that the lower the TAPPI opacity, the more often the trade refers to "transparency", and the closer the opacity is to 65%, the more the trade uses the term "translucent". Translucent papers usually retain the more common characteristics of bond papers, such as formation and brightness, whereas transparent sheets most often have a more uniformly transulcent fibre mass with considerably less brightness. This holds true whether the paper under discussion is made entirely of chemical wood pulp, or of a blend of chemical wood pulp and cotton or linen fibres.

It has thus been shown that ordinary grades of stationary can be provided with a pseudo-watermark by a curable chemical impregnation according to this invention by means of a simple hand method or commercial printing machines. In commercial printing machines the compositions of this invention are employed instead of printing inks and may be applied in a similar manner. From this it can be readly appreciated that small quantities of paper may be provided with a pseudo-watermark of selected configuration or design at costs which meet requirements of smaller volume customers and thereby making available, economically, a long sought paper product.

Based on the weight of paper the amount of curable impregnating composition of this invention, in terms of percentage by weight, may vary due to the density of the paper and its impregnating characteristics. Therefore an amount sufficient to reduce the TAPPI opacity to below 65% is employed when working with translucent paper. In relation to the bond paper used in the examples, an impregnation in the amount of 15% or less by weight of the synthetic resin based on the weight of the paper within the area impregnated gave satisfactory results.

WHAT WE CLAIM IS:—

1. A method of treating paper or a paper product so as to produce a pseudo-watermark in it which method comprises applying to the paper a curable colourless synthetic resin which is insoluble in water and has a refractive index of 1.4 to 1.7.

2. A method according to claim 1, in which the synthetic resin is an epoxy resin.

3. A method according to claim 1, in which the synthetic resin is a melamine-formaldehyde resin.

4. A method according to claim 1, in which the synthetic resin is a urea-formaldehyde resin.

5. A method according to claim 1, in which the synthetic resin is a polyester resin.

6. A method according to any preceding claim, in which the synthetic resin is applied in a composition containing up to 80% by weight of an organic solvent and in which the solvent is removed by evaporation.

7. A method according to any preceding claim, in which the synthetic resin is applied in a composition containing up to 60% by weight of a substantially colourless curing agent for the synthetic resin.

In the above examples it is clear that not only a wide number of solvents can be used but also the proportional amount may range from zero to as high as 80% although the range of 10 to 70% is more preferable.

In all of these examples the blank paper product employed in applying the compositions to form pseudo-watermarks according to this invention was of the bond grade consisting of 25% cotton and 75% wood-pulp. The apparent density of the blank paper stock was 5.0 and its thickness 4 mils. The resulting pseudo-watermarks possessed a high degree of transparency. Other types of paper sheet products such as commercial mineograph, tracing and even newsprint were successfully pseudo-watermarked with many of these compositions according to the invention.

In the paper industry the terms "opaque" and "semi-opaque" can refer to varying levels of opacity, depending on the specific type of paper under discussion. For purposes herein, more definite meanings can be given these terms by the following explanation.

In the writing paper field, trade practice classifies an "opaque" sheet of bond paper as one of a standard weight (500 sheets cut 17 inches by 22 inches, weighing between 19.5 lbs. and 20.5 lbs.) having a TAPPI (Technical Association of the Pulp and Paper Industry) opacity in excess of 87%, this percentage being the reciprocal of the transmission of monochromatic light passing through the paper.

A so-called "semi-opaque" sheet is understood in trade practice as one of standard weight (500 sheets 17 inches by 22 inches weighing between 19.5 and 20.5 lbs) having a TAPPI opacity between 87% and 65%.

Writing papers having a TAPPI opacity less than 65% are often referred to as "transparent". It will suffice to say that the lower the TAPPI opacity, the more often the trade refers to "transparency", and the closer the opacity is to 65%, the more the trade uses the term "translucent". Translucent papers usually retain the more common characteristics of bond papers, such as formation and brightness, whereas transparent sheets most often have a more uniformly transulcent fibre mass with considerably less brightness. This holds true whether the paper under discussion is made entirely of chemical wood pulp, or of a blend of chemical wood pulp and cotton or linen fibres.

It has thus been shown that ordinary grades of stationary can be provided with a pseudo-watermark by a curable chemical impregnation according to this invention by means of a simple hand method or commercial printing machines. In commercial printing machines the compositions of this invention are employed instead of printing inks and may be applied in a similar manner. From this it can be readly appreciated that small quantities of paper may be provided with a pseudo-watermark of selected configuration or design at costs which meet requirements of smaller volume customers and thereby making available, economically, a long sought paper product.

Based on the weight of paper the amount of curable impregnating composition of this invention, in terms of percentage by weight, may vary due to the density of the paper and its impregnating characteristics. Therefore an amount sufficient to reduce the TAPPI opacity to below 65% is employed when working with translucent paper. In relation to the bond paper used in the examples, an impregnation in the amount of 15% or less by weight of the synthetic resin based on the weight of the paper within the area impregnated gave satisfactory results.

WHAT WE CLAIM IS:—

1. A method of treating paper or a paper product so as to produce a pseudo-watermark in it which method comprises applying to the paper a curable colourless synthetic resin which is insoluble in water and has a refractive index of 1.4 to 1.7.

2. A method according to claim 1, in which the synthetic resin is an epoxy resin.

3. A method according to claim 1, in which the synthetic resin is a melamine-formaldehyde resin.

4. A method according to claim 1, in which the synthetic resin is a urea-formaldehyde resin.

5. A method according to claim 1, in which the synthetic resin is a polyester resin.

6. A method according to any preceding claim, in which the synthetic resin is applied in a composition containing up to 80% by weight of an organic solvent and in which the solvent is removed by evaporation.

7. A method according to any preceding claim, in which the synthetic resin is applied in a composition containing up to 60% by weight of a substantially colourless curing agent for the synthetic resin.

* C L M S *

8. A method of treating paper or a paper product so as to produce a pseudo-watermark, which method comprises applying to the paper a liquid solution of a composition given in any one of Examples 1—142 set forth herein.

9. Paper or a paper product treated by the method of any one of claims 1—8.

For the Applicants:
LLOYD WISE, BOULY & HAIG,
Chartered Patent Agents,
Norman House, 105—109, Strand,
London, W.C.2.

ERRATUM

SPECIFICATION No. 1,013,903
Amendment No. 1

Page 1, line 16, *for* "then" *read* "thus"

THE PATENT OFFICE
14th March 1966

* C L M S *