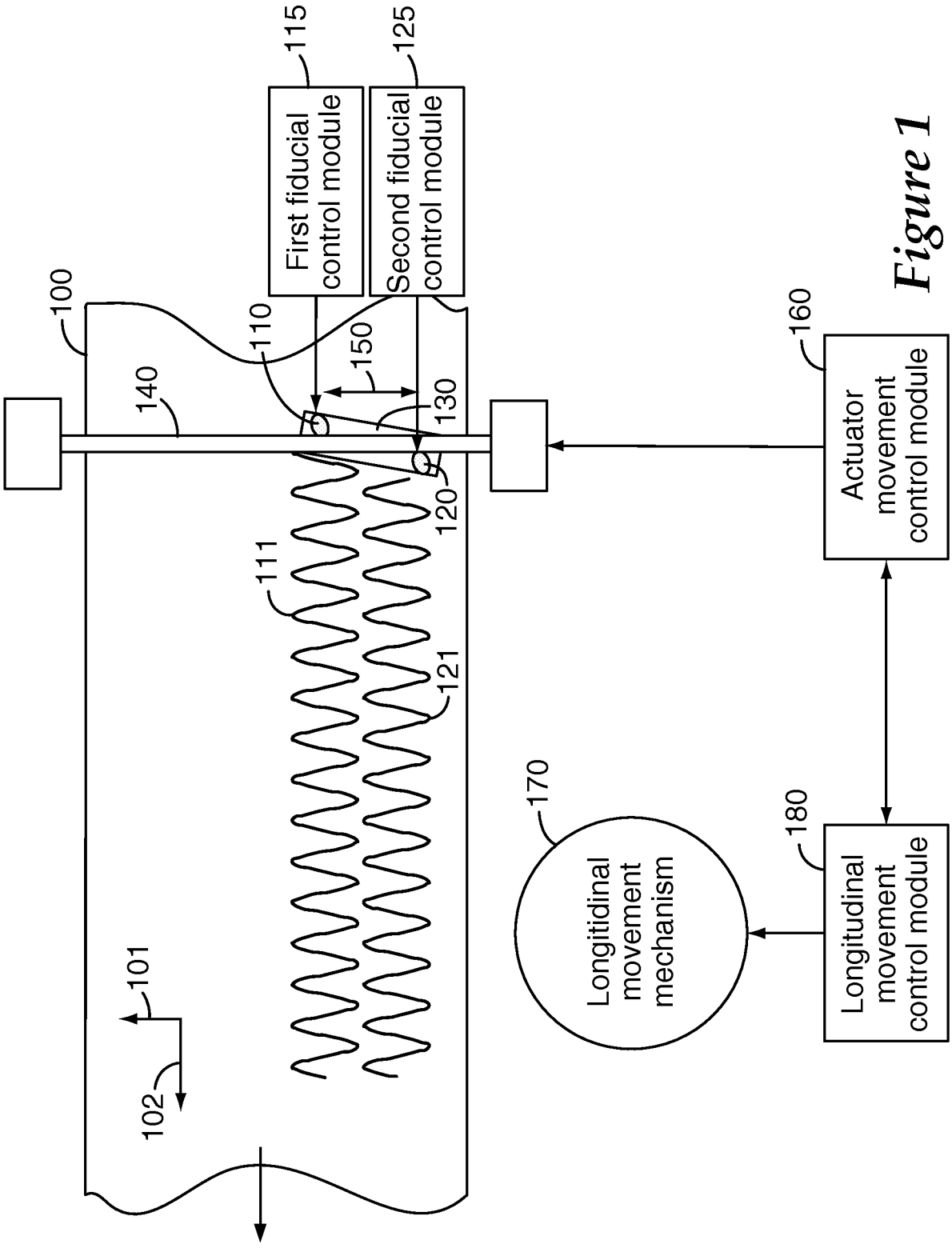
First fiducial control module
Second fiducial control module
Actuator movement control module
Longitudinal movement mechanism
Longitudinal movement control module
100
101
102
110
111
115
120
121
125
130
140
150
160
170
180

Figure 1

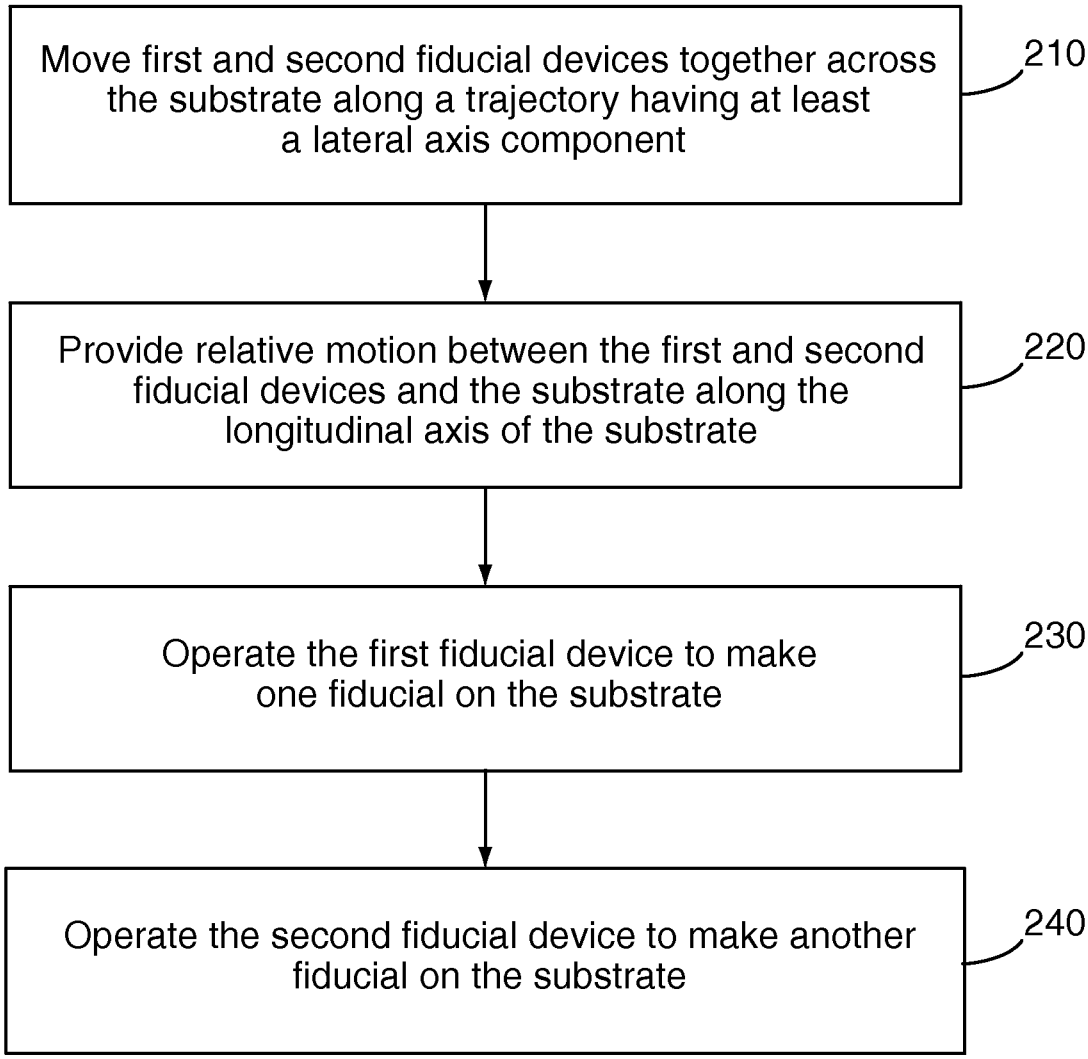
Move first and second fiducial devices together across the substrate along a trajectory having at least a lateral axis component
210
Provide relative motion between the first and second fiducial devices and the substrate along the longitudinal axis of the substrate
220
Operate the first fiducial device to make one fiducial on the substrate
230
Operate the second fiducial device to make another fiducial on the substrate
240

Figure 2

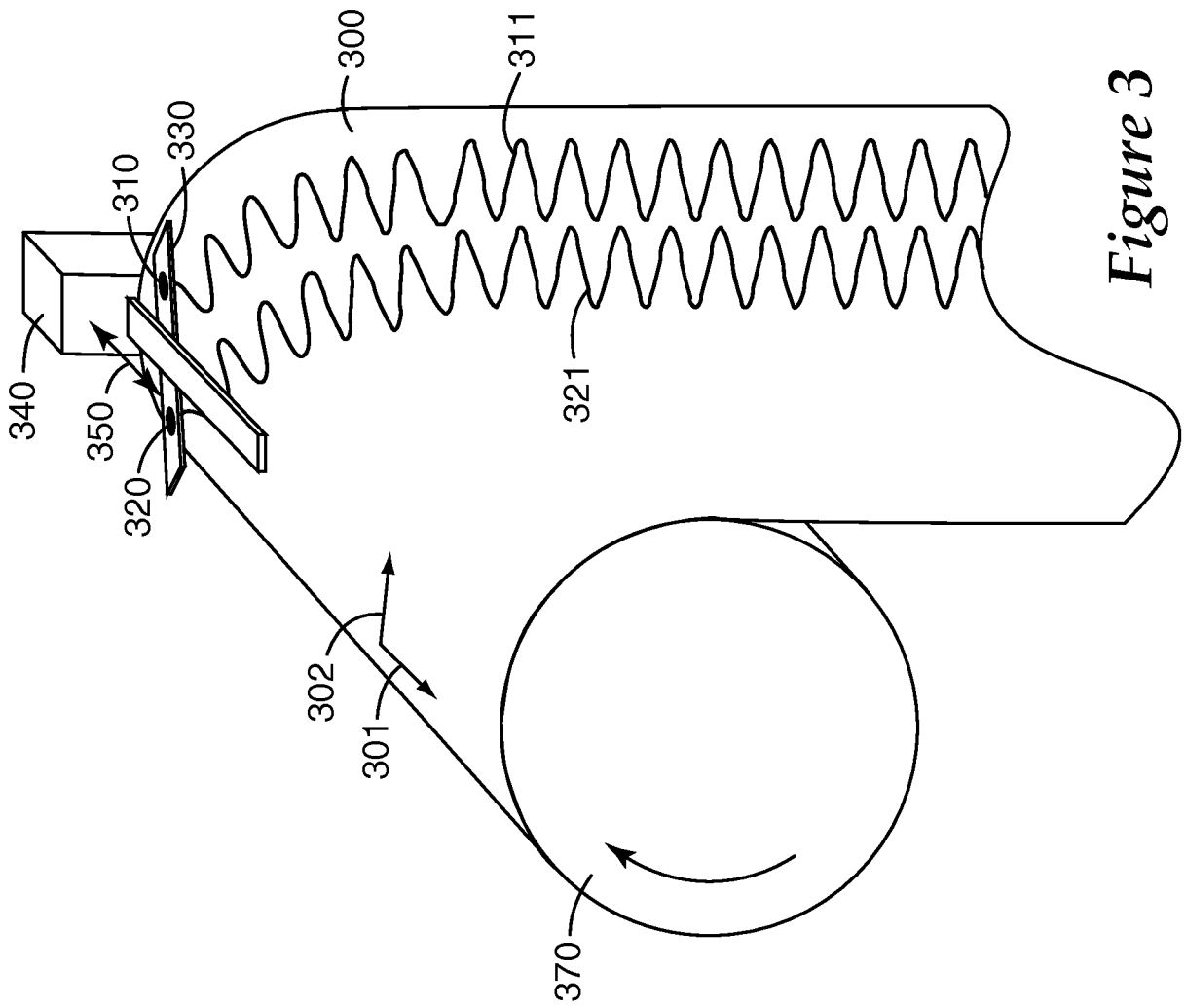

Figure 3

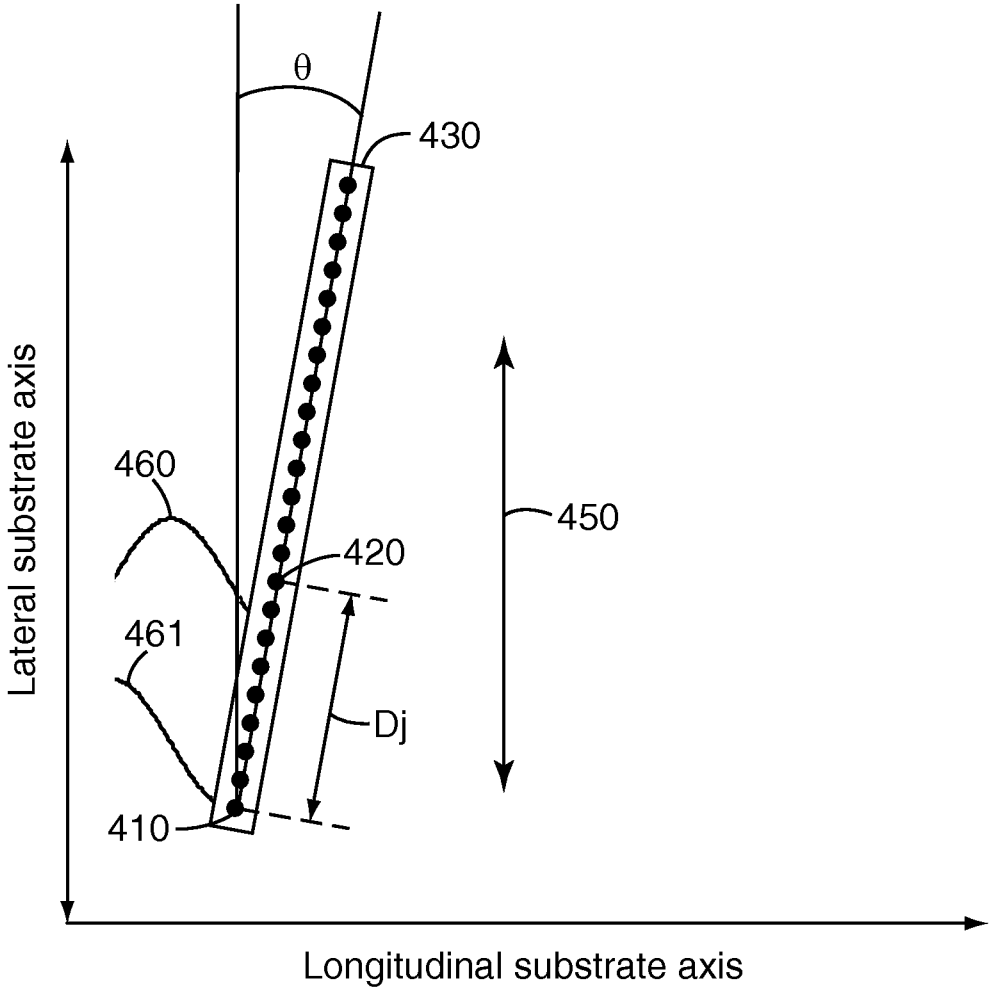
θ
430
460
420
450
461
Dj
410
Lateral substrate axis
Longitudinal substrate axis

Figure 4

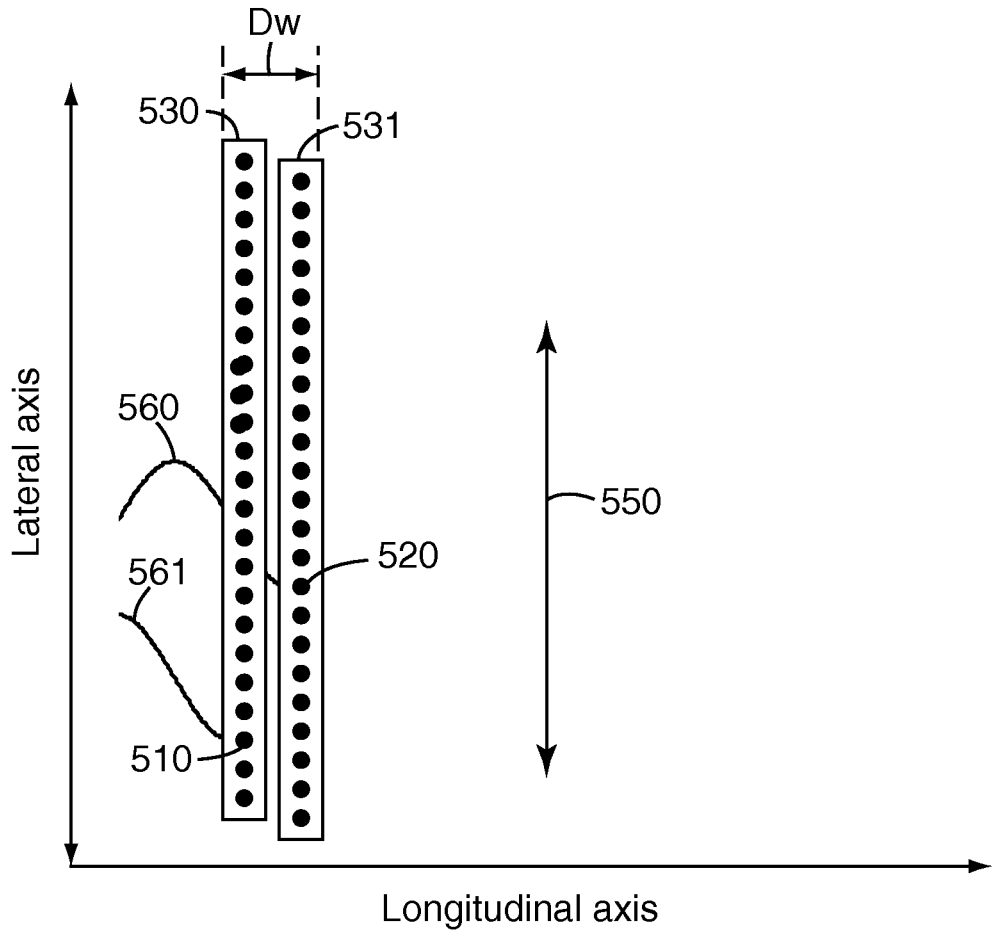
Dw
530
531
560
561
520
510
550
Lateral axis
Longitudinal axis

Figure 5

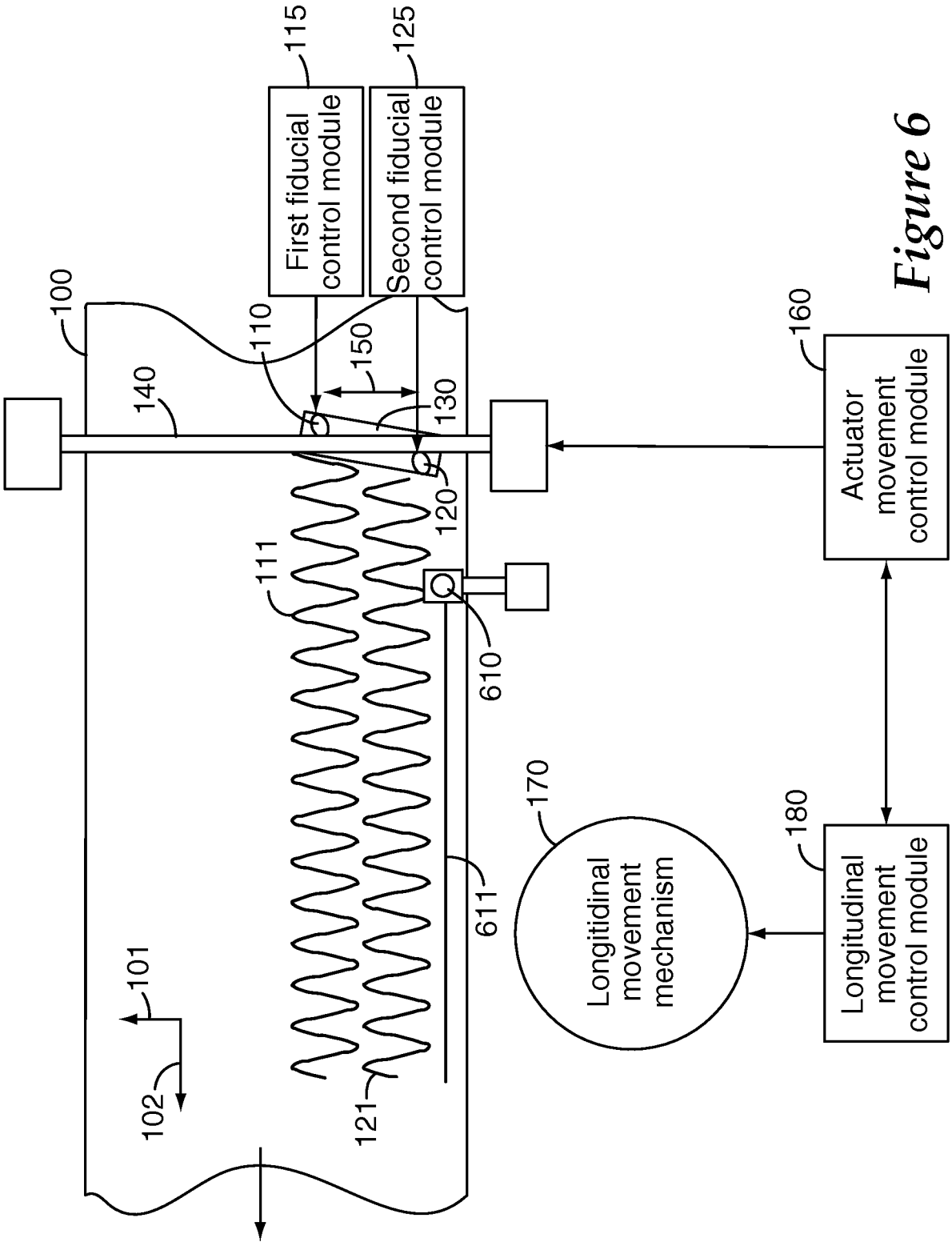
First fiducial control module
Second fiducial control module
Actuator movement control module
Longitudinal movement mechanism
Longitudinal movement control module
100
101
102
110
111
115
120
121
125
130
140
150
160
170
180
610
611

Figure 6

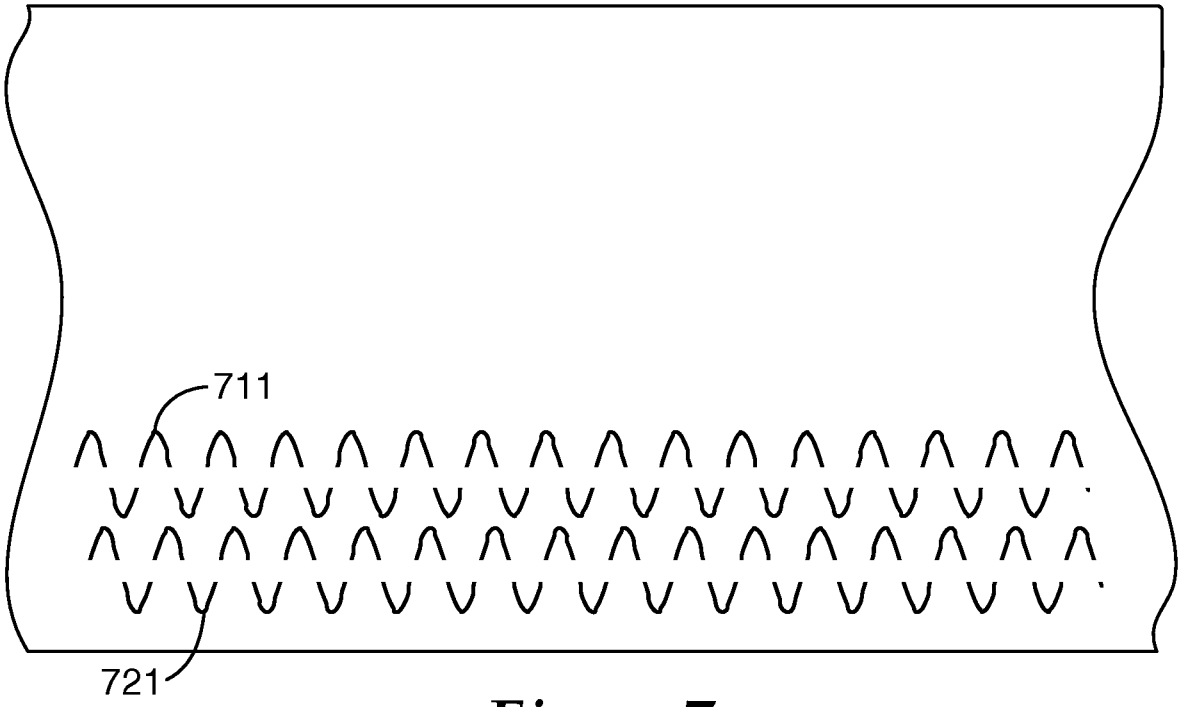

Figure 7

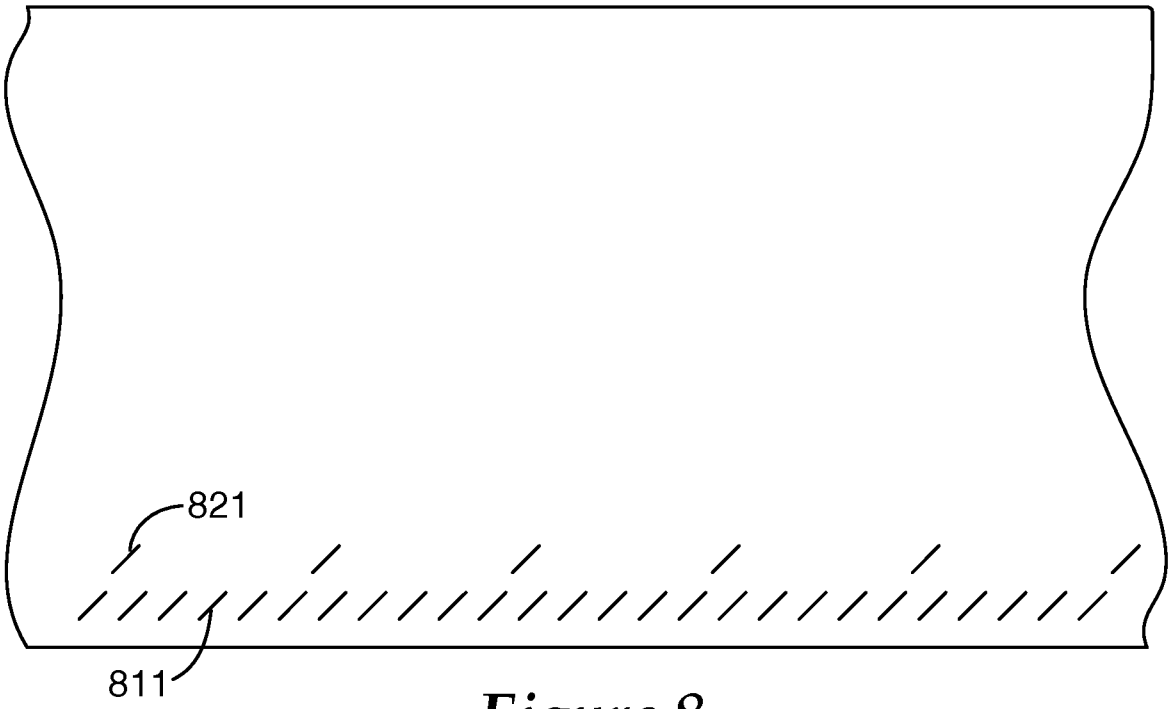

Figure 8

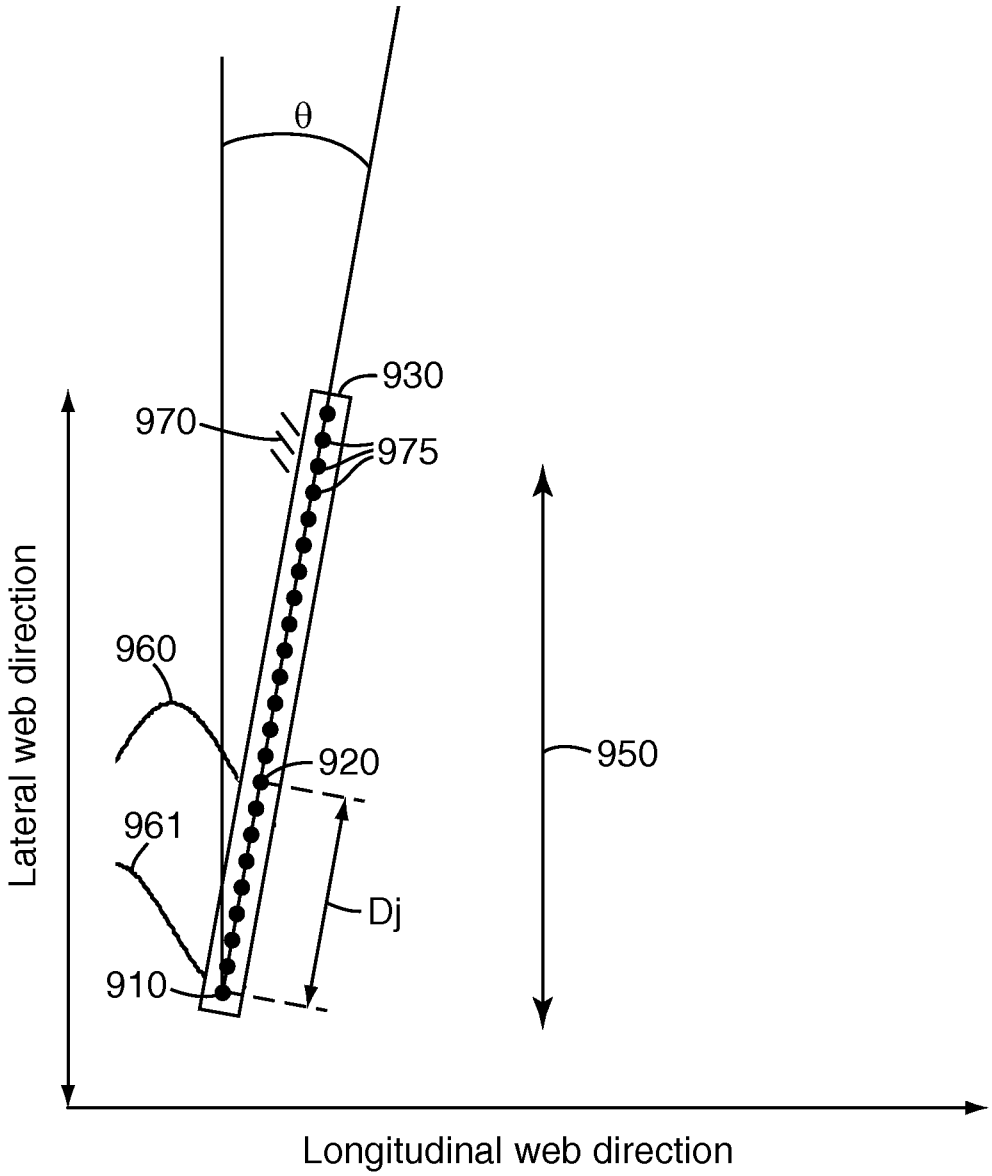
θ
930
970
975
960
920
950
961
Dj
910
Lateral web direction
Longitudinal web direction

Figure 9

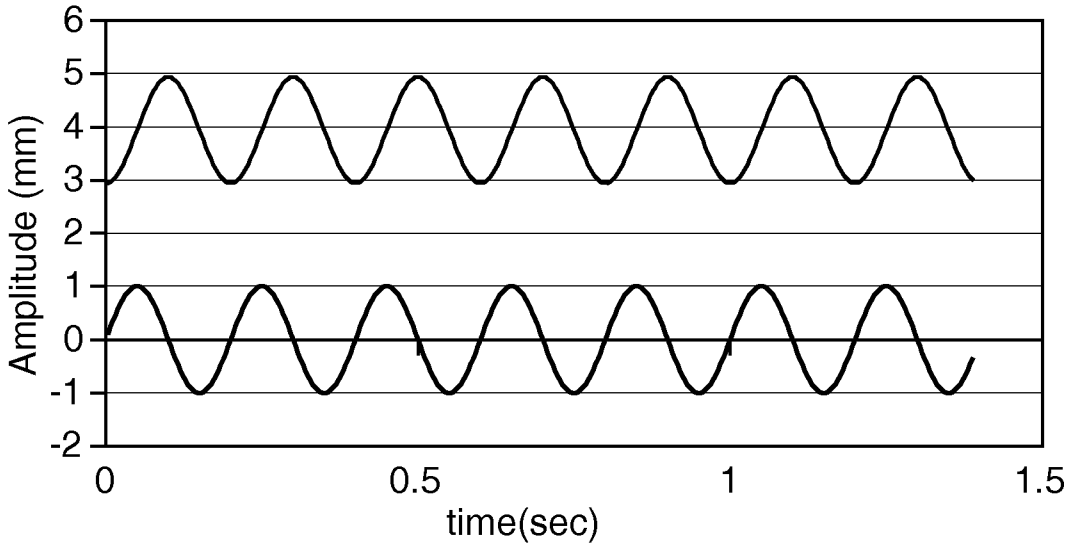

Figure 10

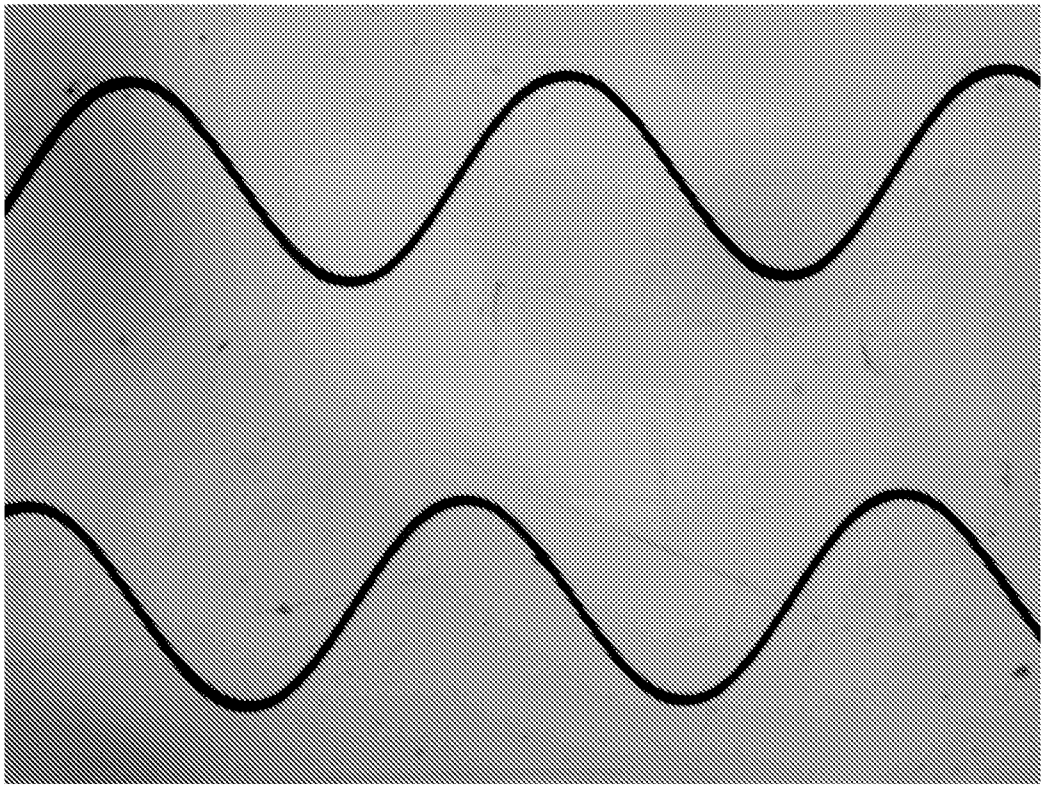

Figure 11