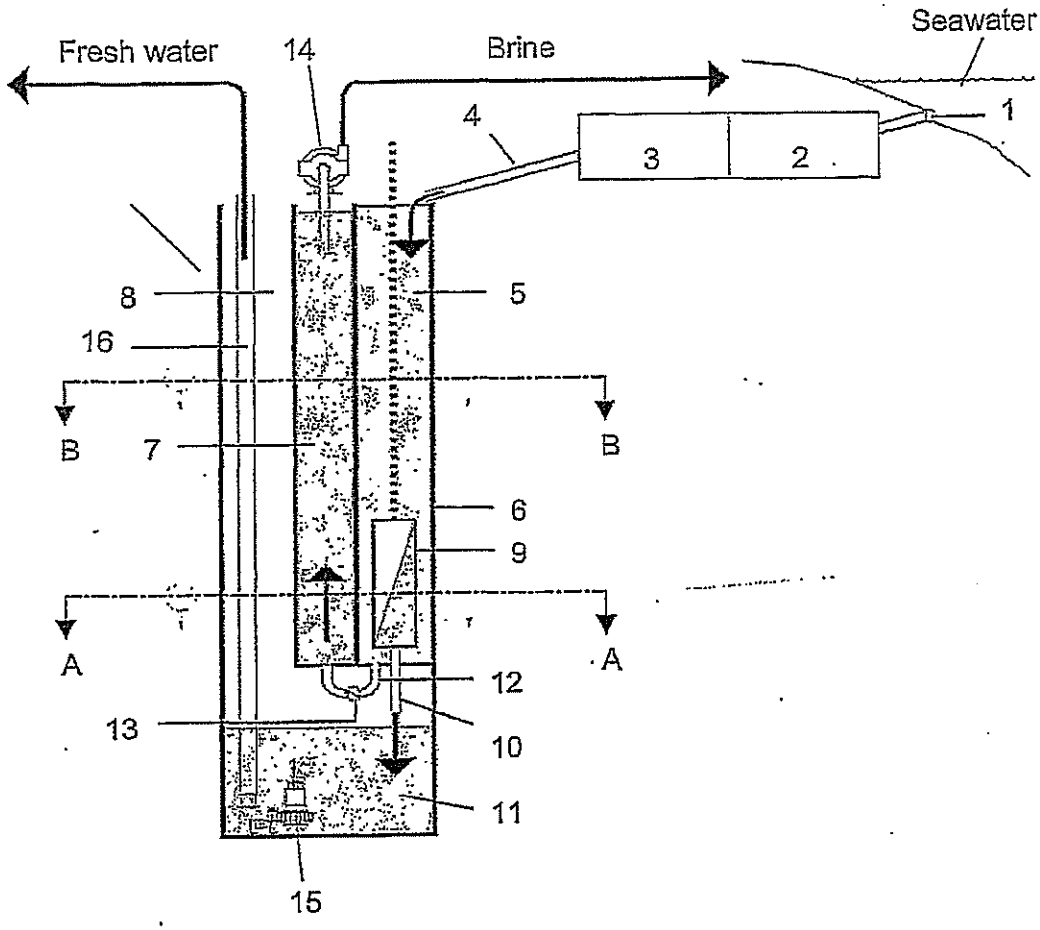
Fresh water
14
Brine
Seawater
4
1
3
2
8
5
16
B
7
B
6
9
A
A
12
13
10
11
15

Figure 1

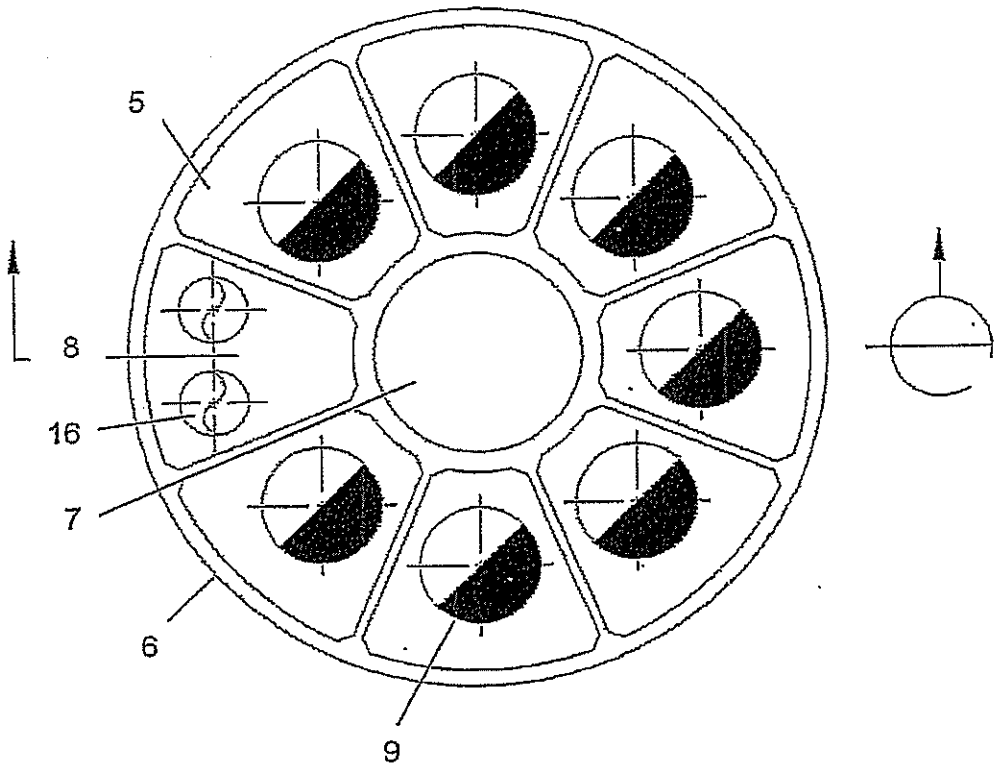

Figure 2

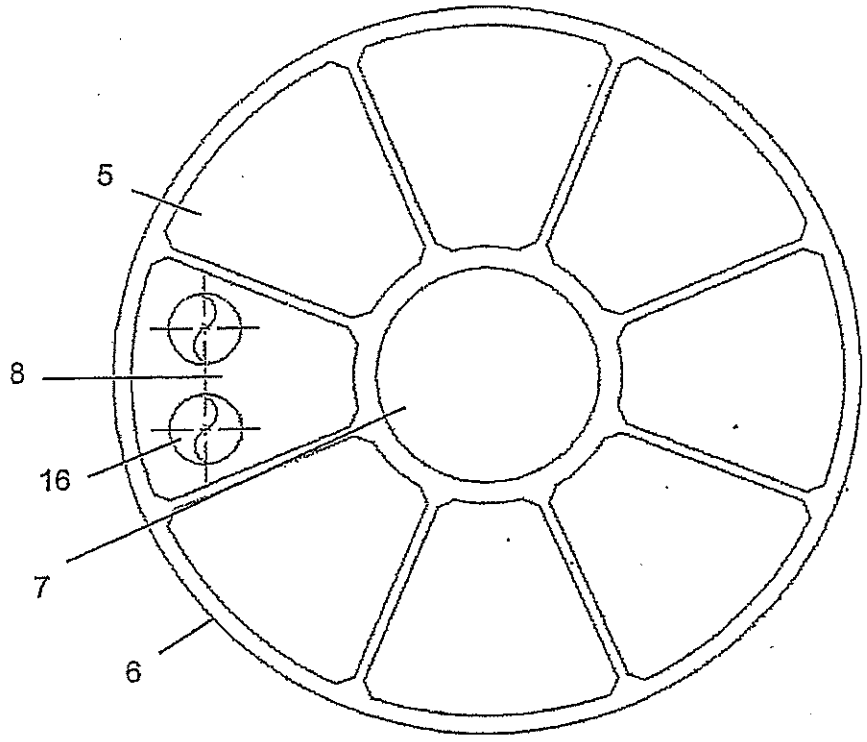

Figure 3

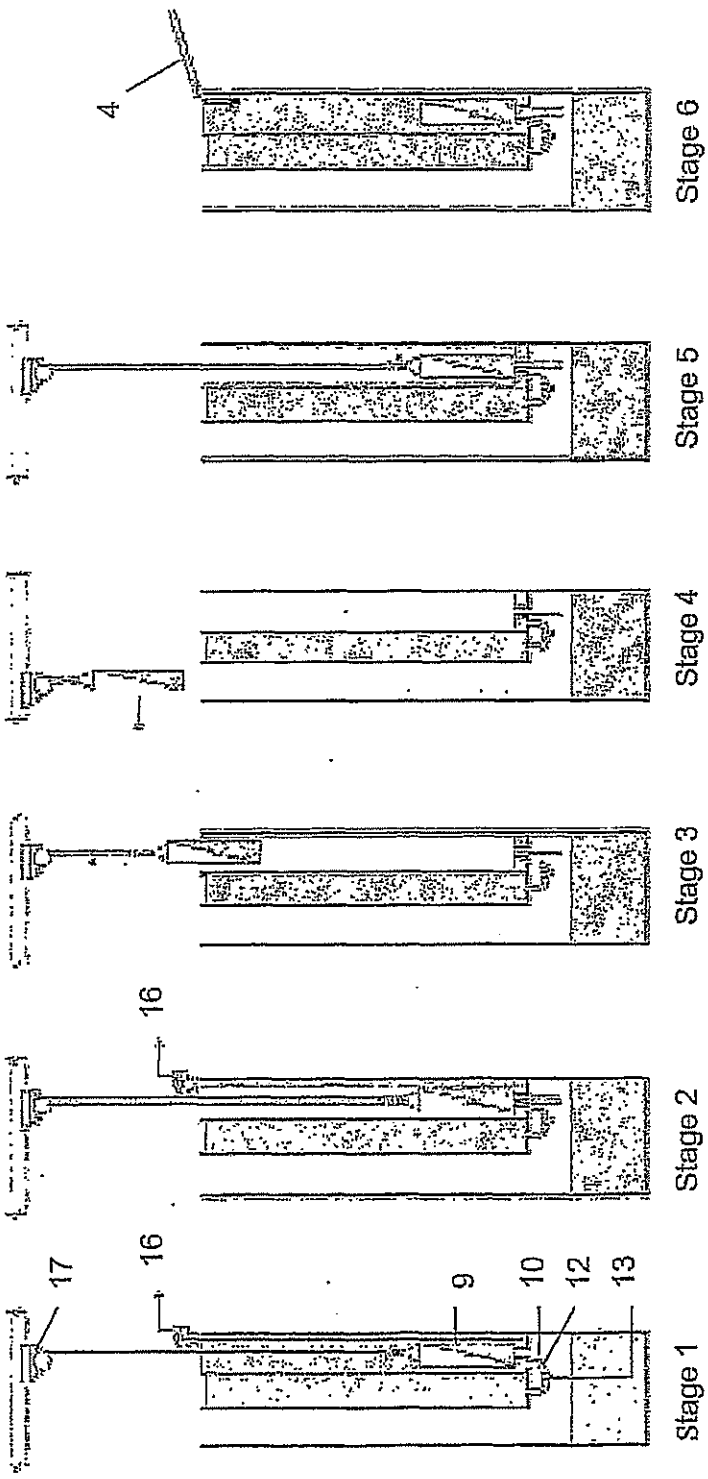
Stage 1
Stage 2
Stage 3
Stage 4
Stage 5
Stage 6
17
16
16
9
10
12
13
4

Figure 4