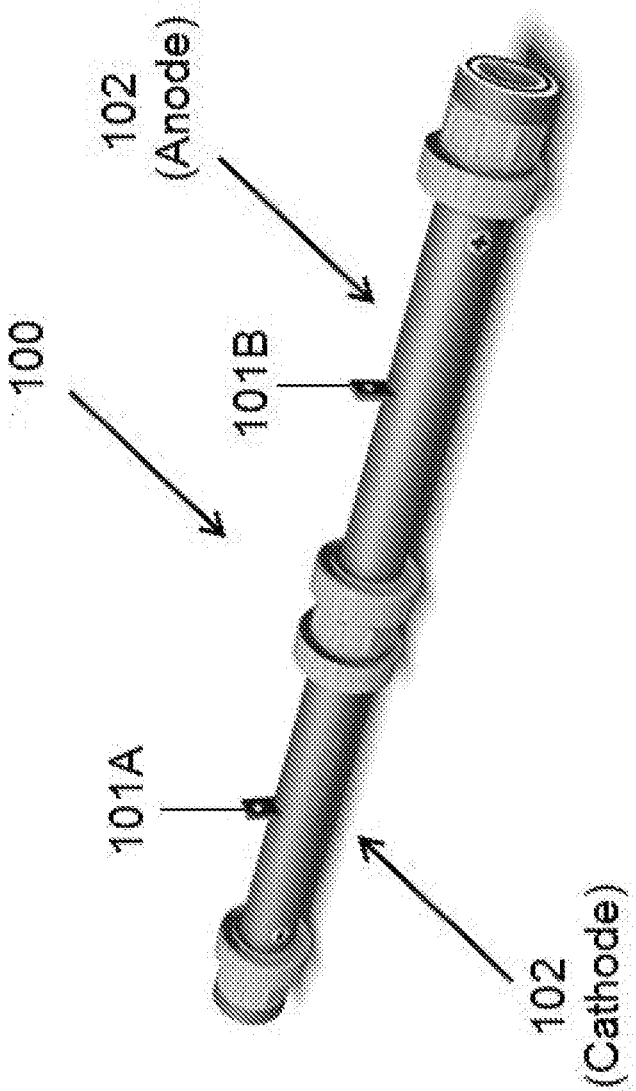

FIG. 1A

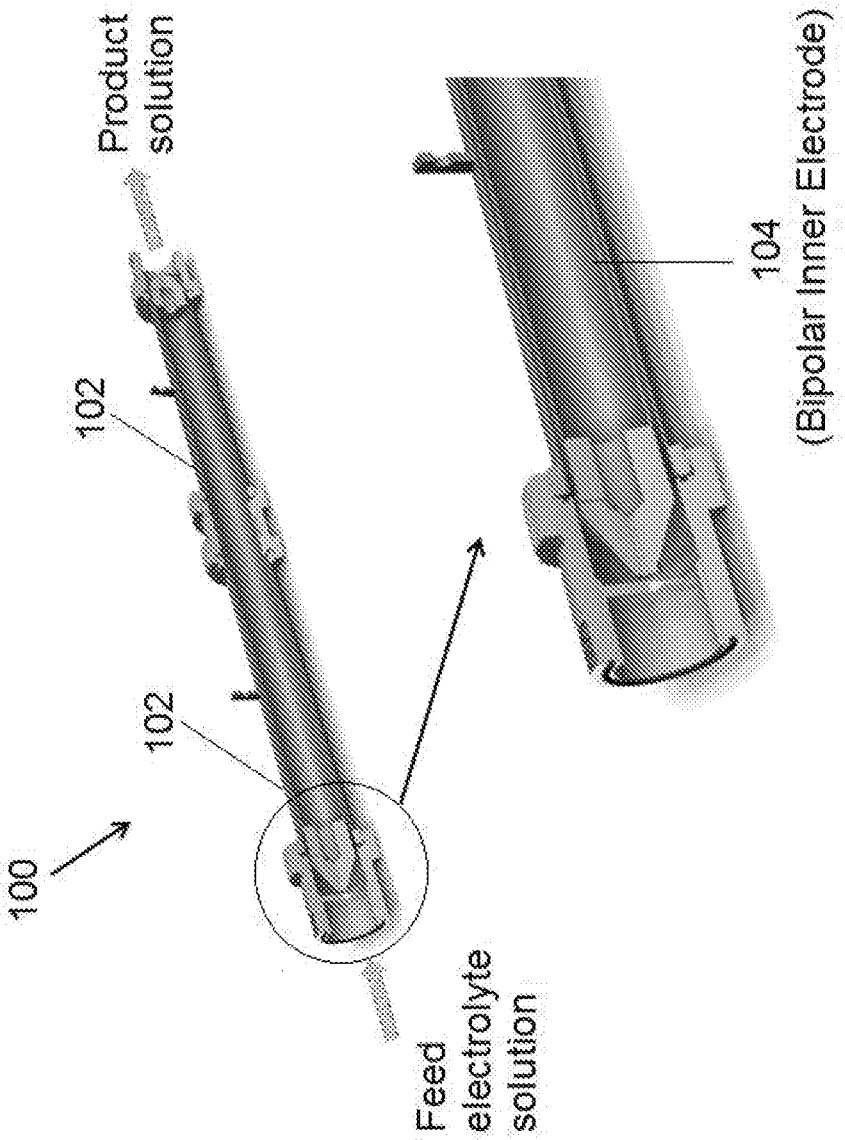
Product solution
102
102
100
Feed electrolyte solution
104
(Bipolar Inner Electrode)

FIG. 1B

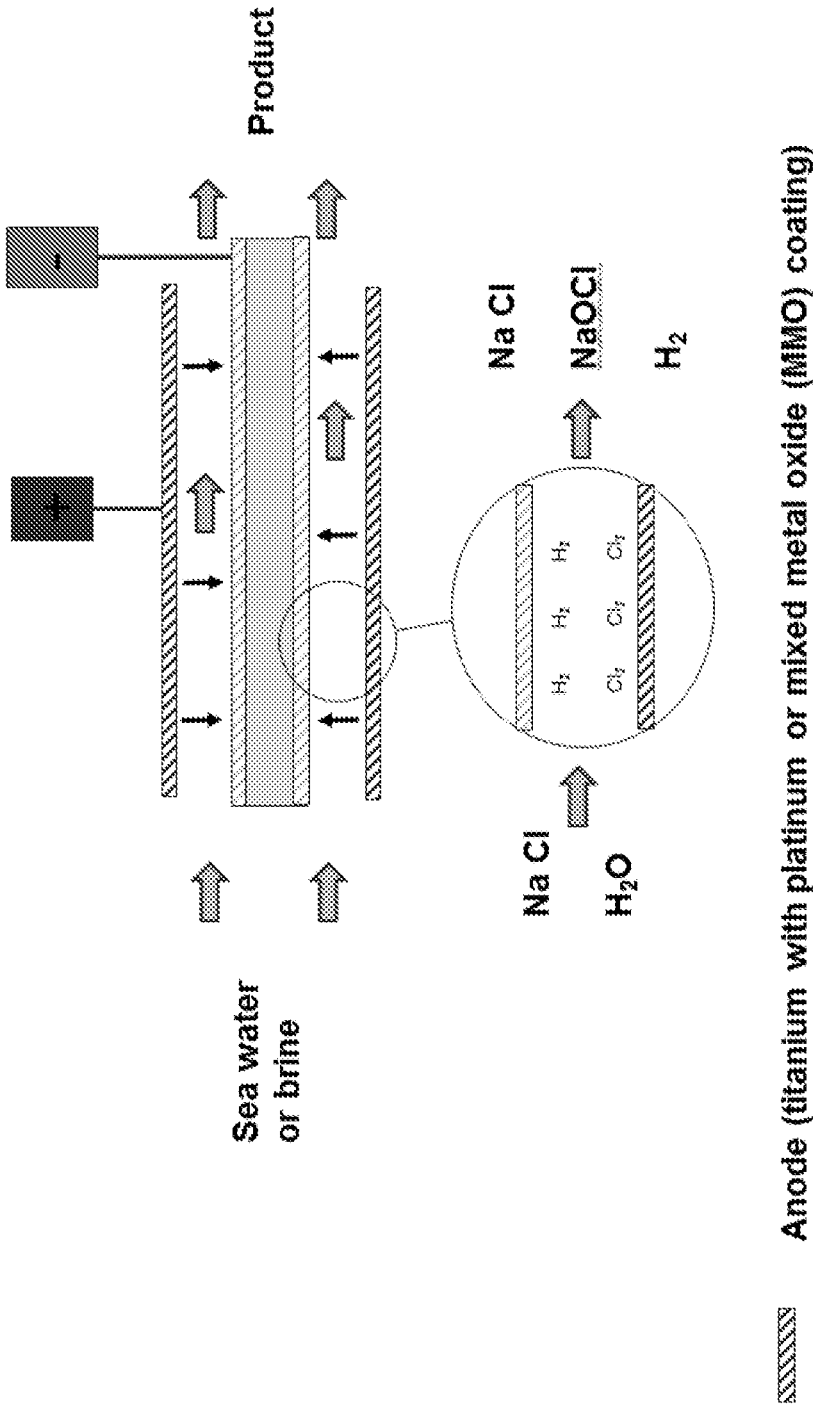
Product
Sea water or brine
Na Cl
H_2O
Na Cl
NaOCl
H_2
Anode (titanium with platinum or mixed metal oxide (MMO) coating)
Cathode (titanium)
Fluid flow
Current

FIG. 2A

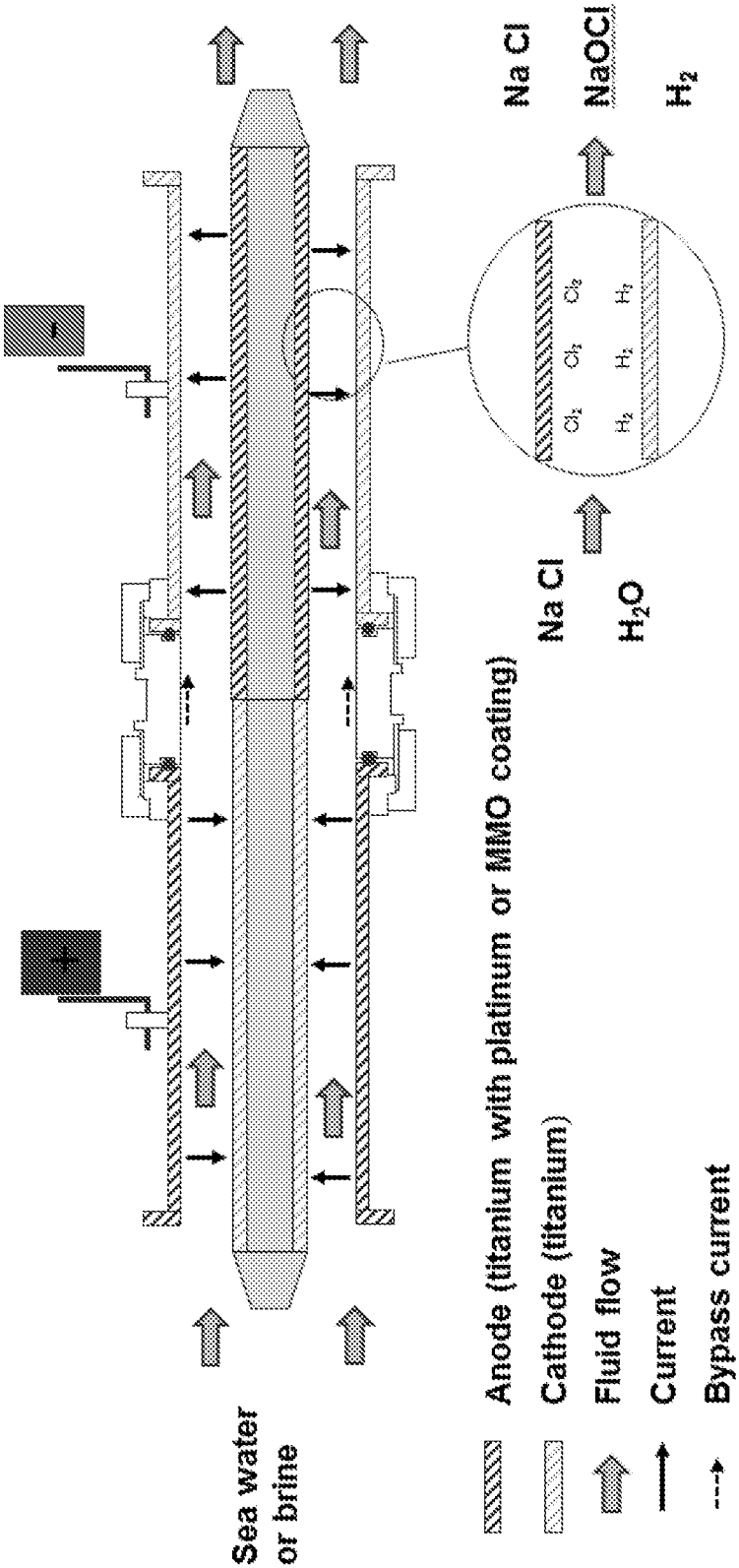
Sea water or brine
Anode (titanium with platinum or MMO coating)
Cathode (titanium)
Fluid flow
Current
Bypass current
Na Cl
H_2O
Na Cl
NaOCl
H_2
Cl_2
H_2

FIG. 2B

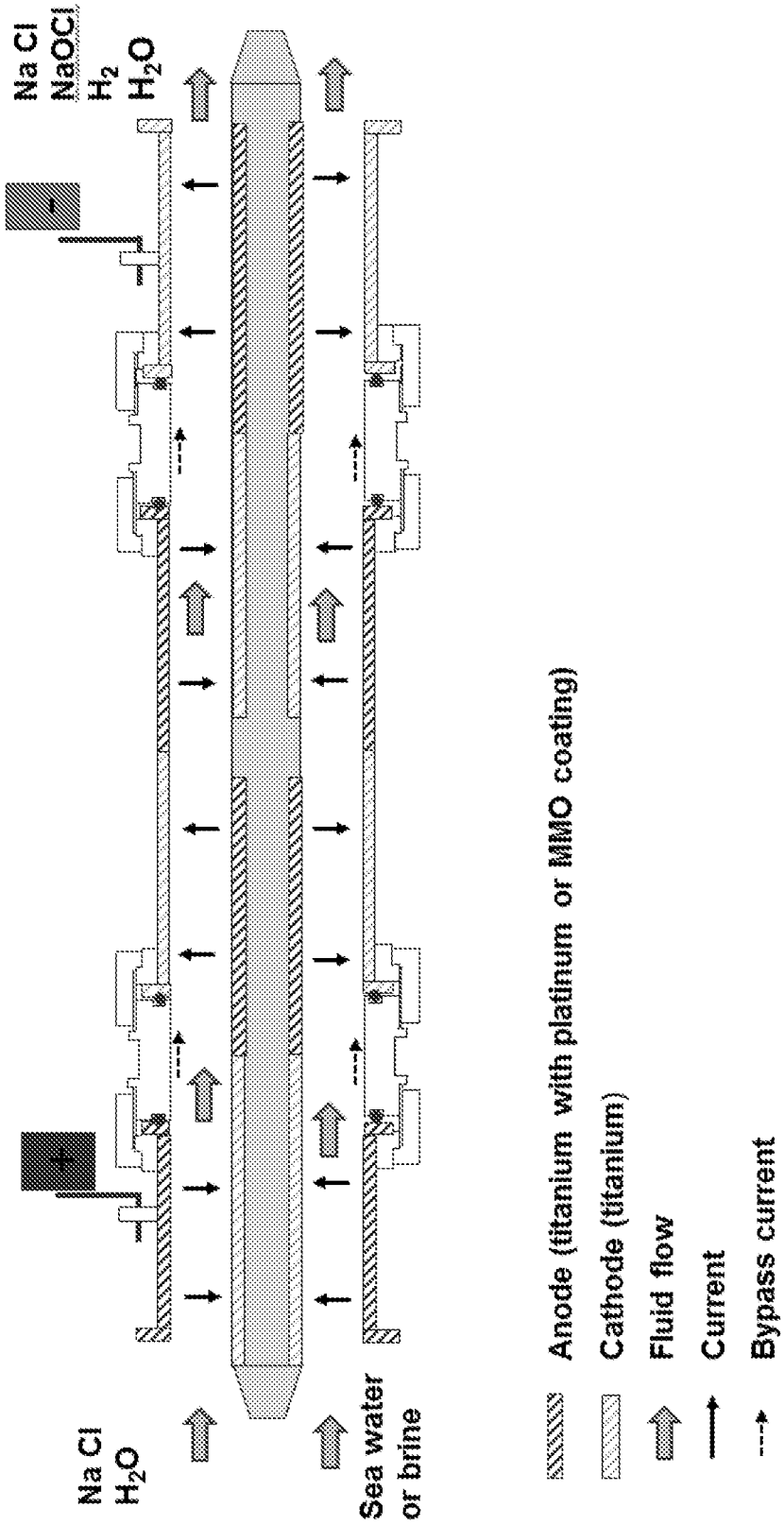
Na Cl
NaOCl
H2
H2O
Na Cl
H2O
Sea water
or brine
Anode (titanium with platinum or MMO coating)
Cathode (titanium)
Fluid flow
Current
Bypass current

FIG. 2C



FIG. 3

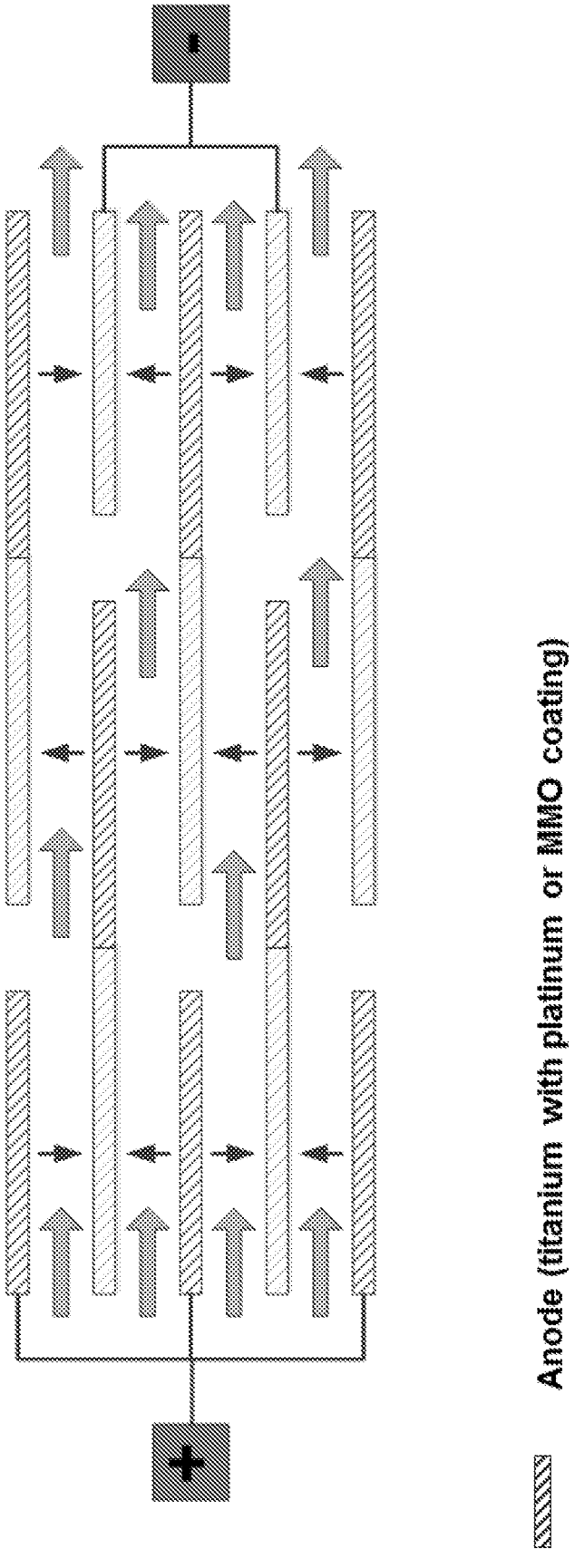
Anode (titanium with platinum or MMO coating)
Cathode (titanium)
Fluid flow
Current

FIG. 4

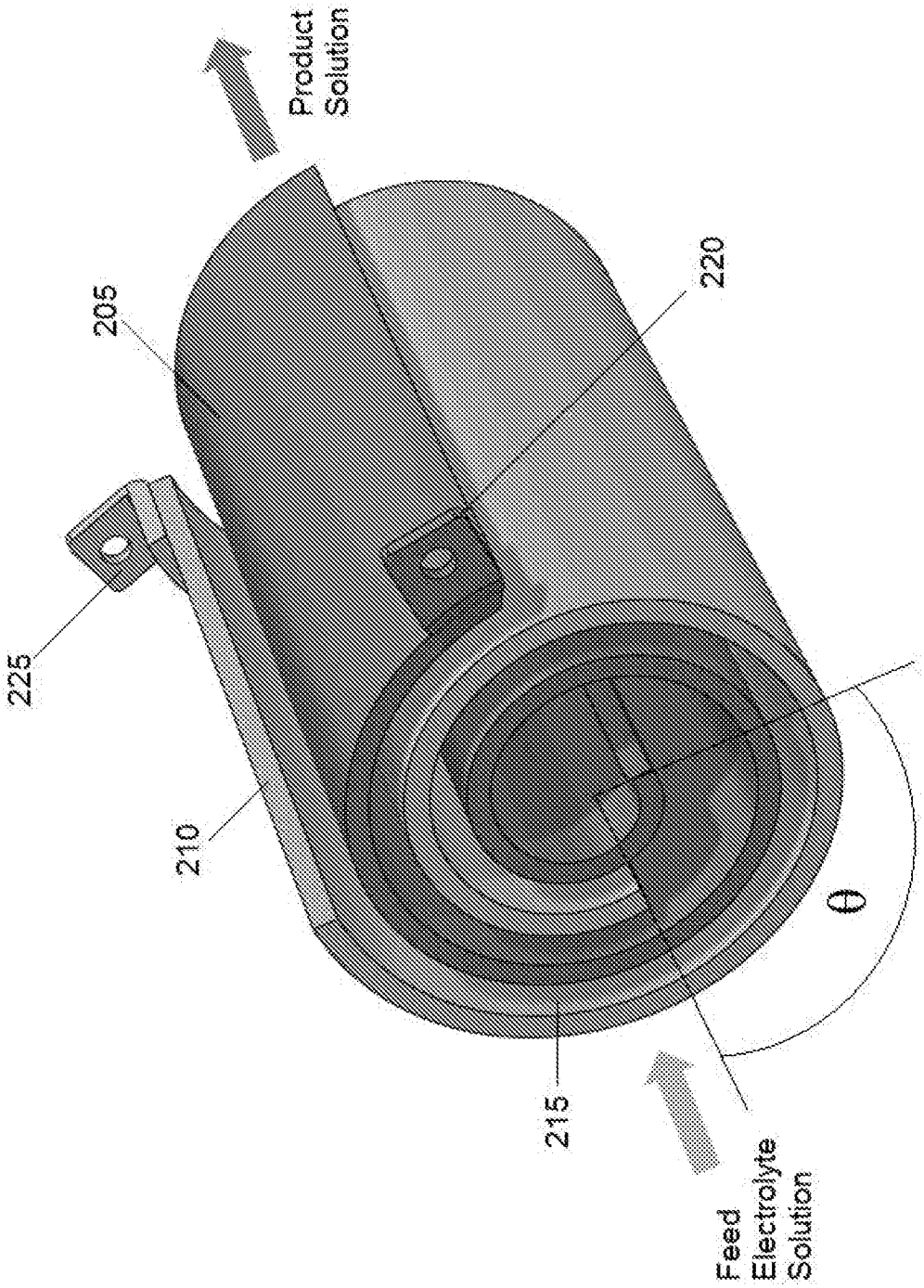
Product Solution
205
220
225
210
215
θ
Feed Electrolyte Solution

FIG. 5

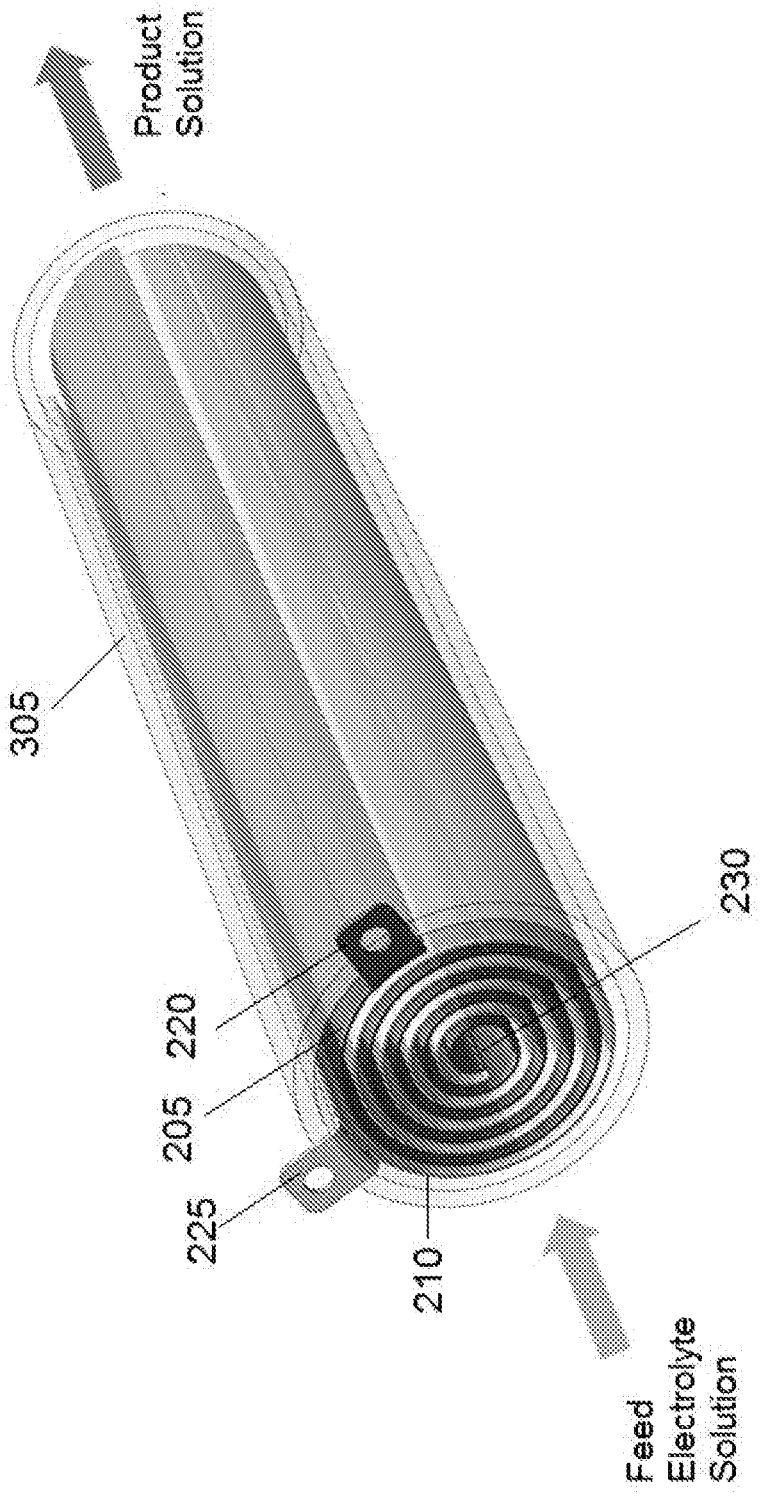
Product Solution
305
220
205
225
210
230
Feed Electrolyte Solution

FIG. 6

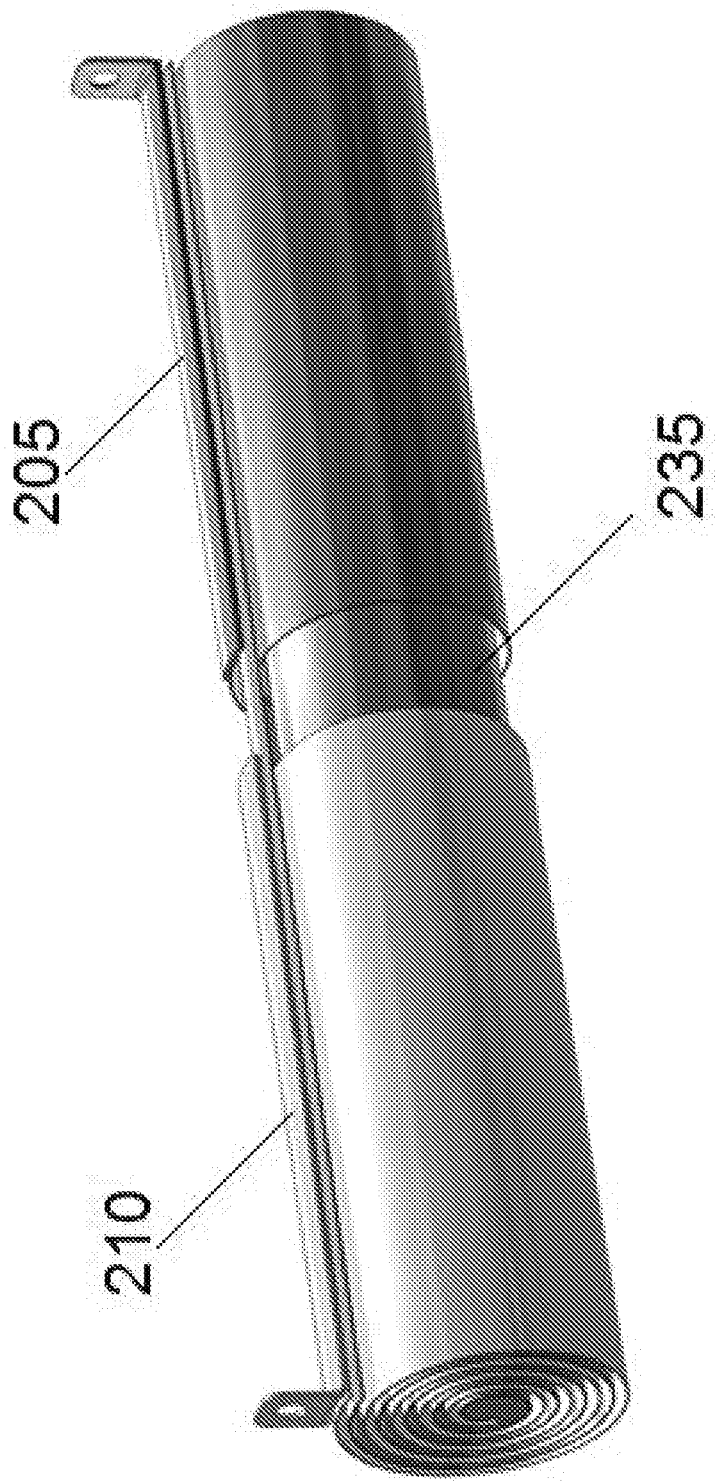

FIG. 7A

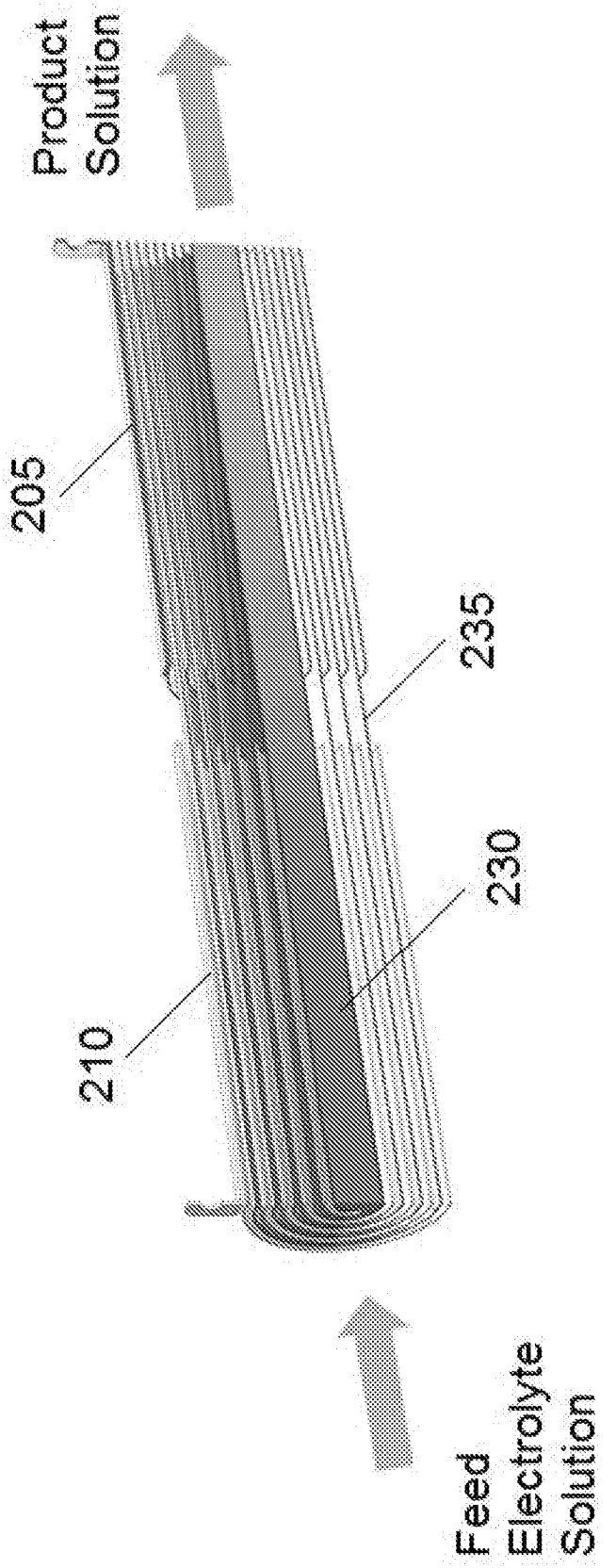
Product Solution
205
235
230
210
Feed Electrolyte Solution

FIG. 7B

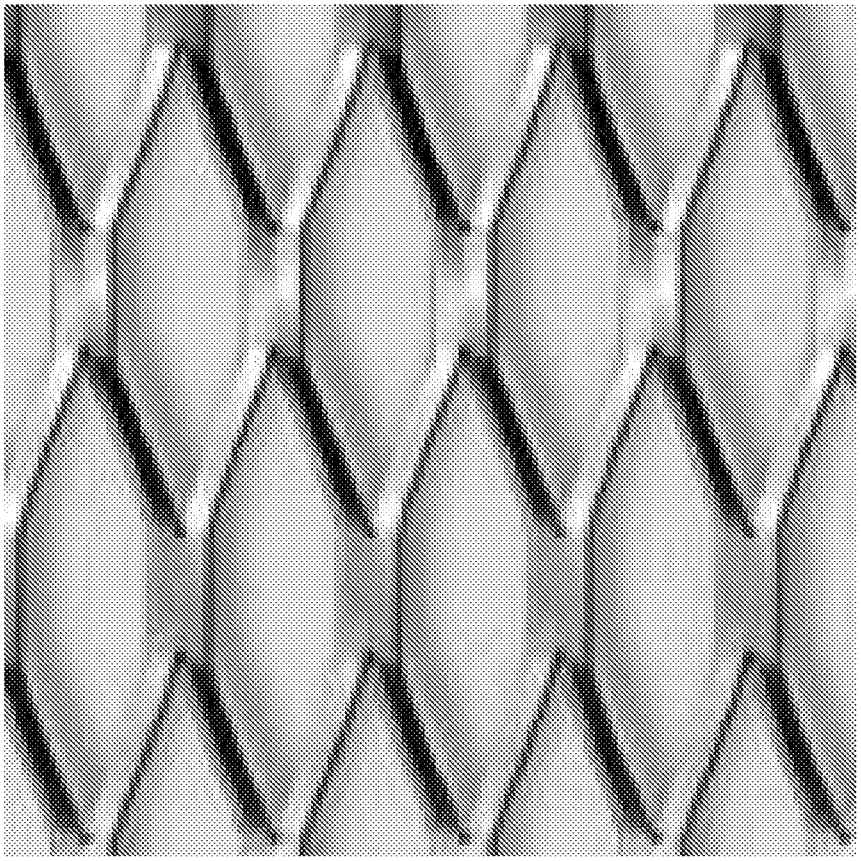

FIG. 8

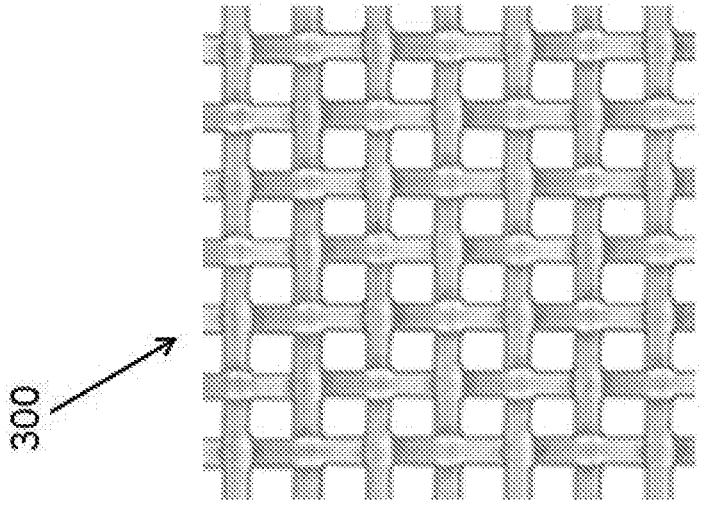

FIG. 9A

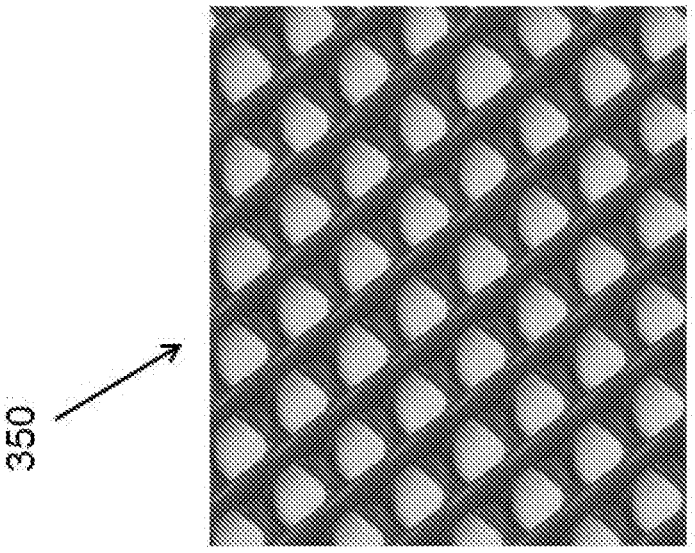

FIG. 9B

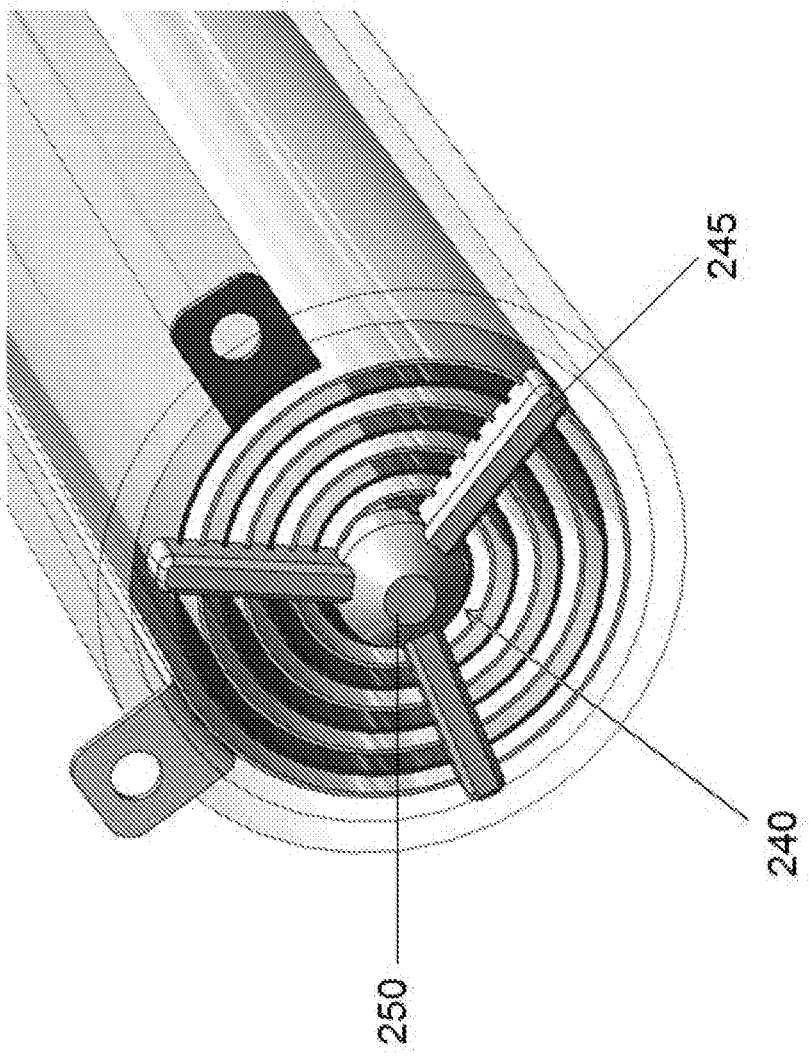

FIG. 10

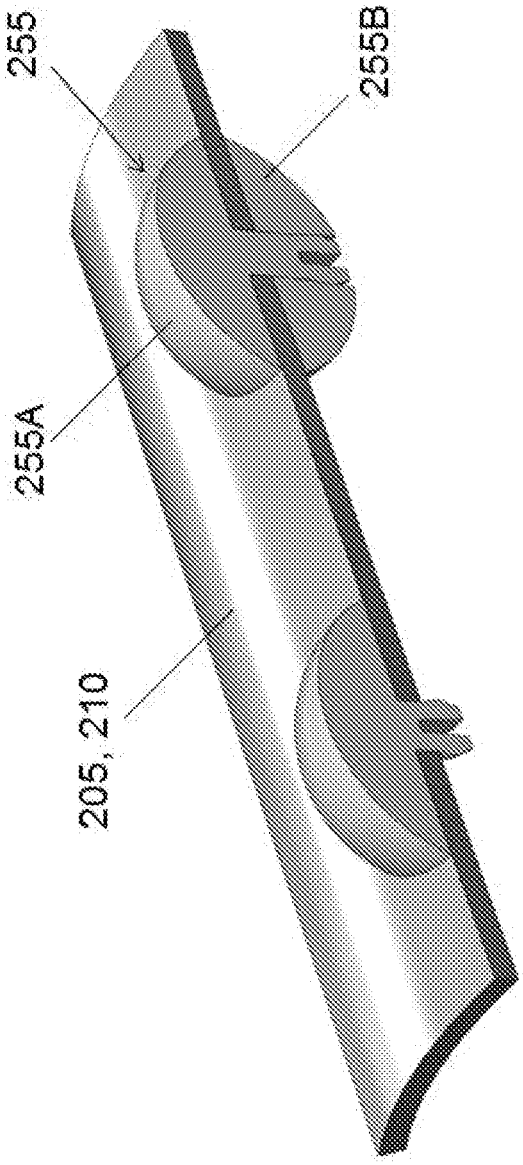

FIG. 11

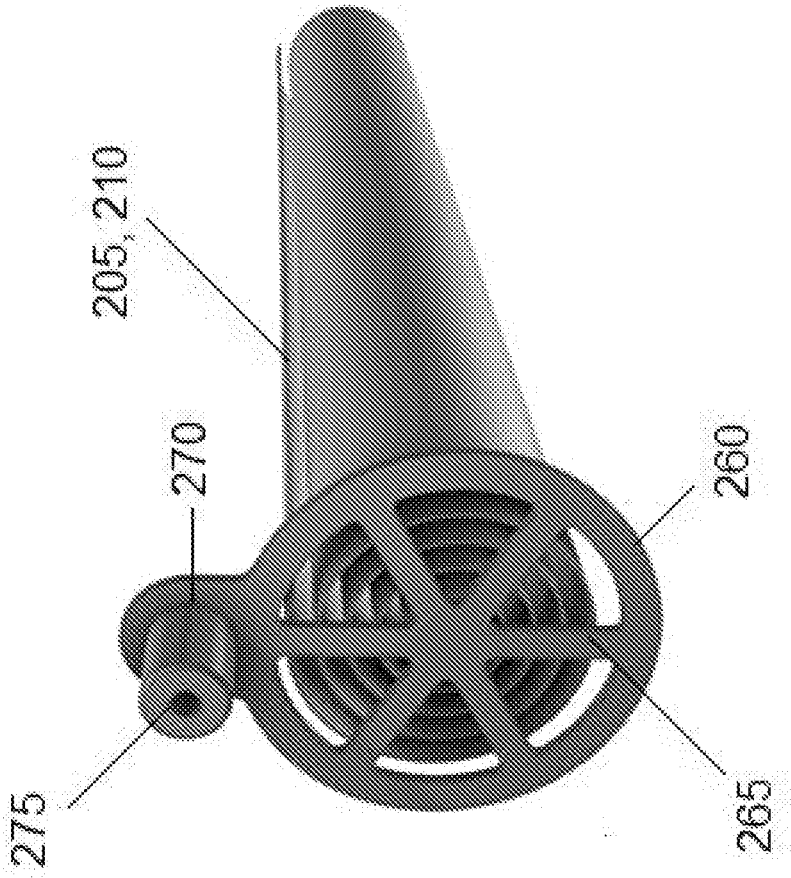

FIG. 12A

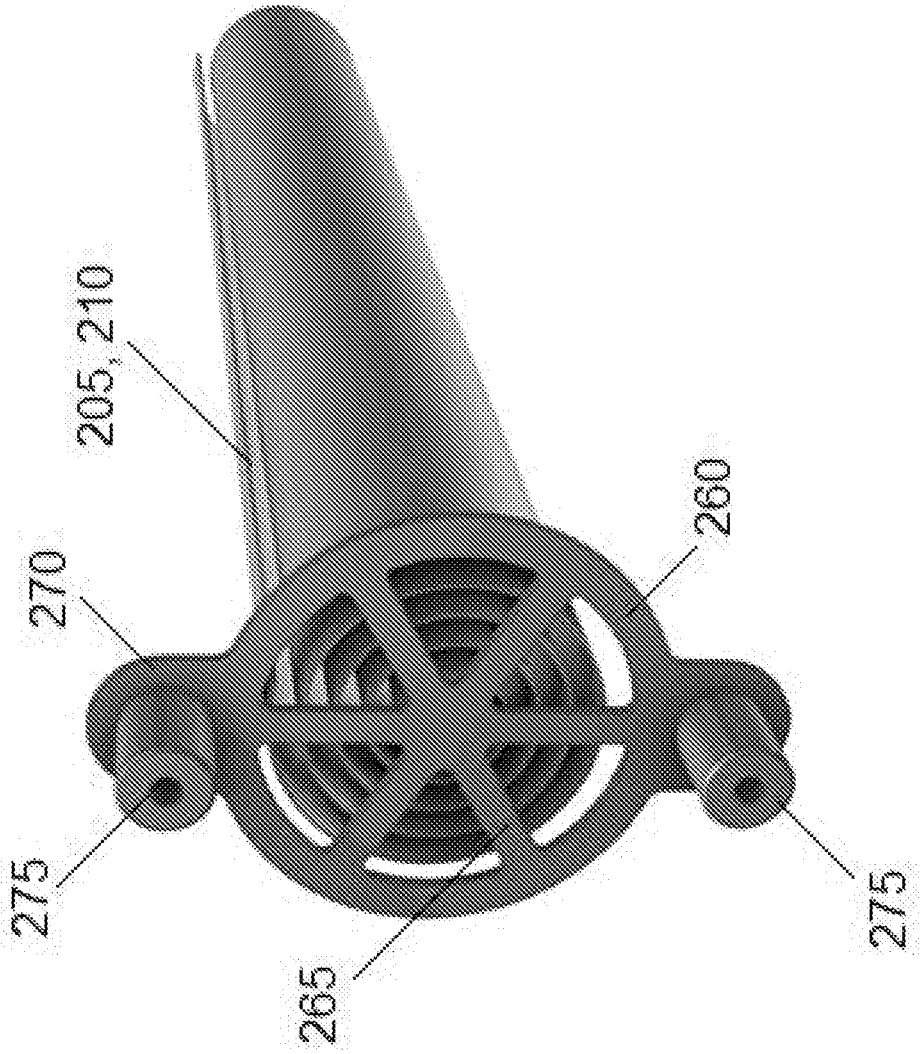

FIG. 12B

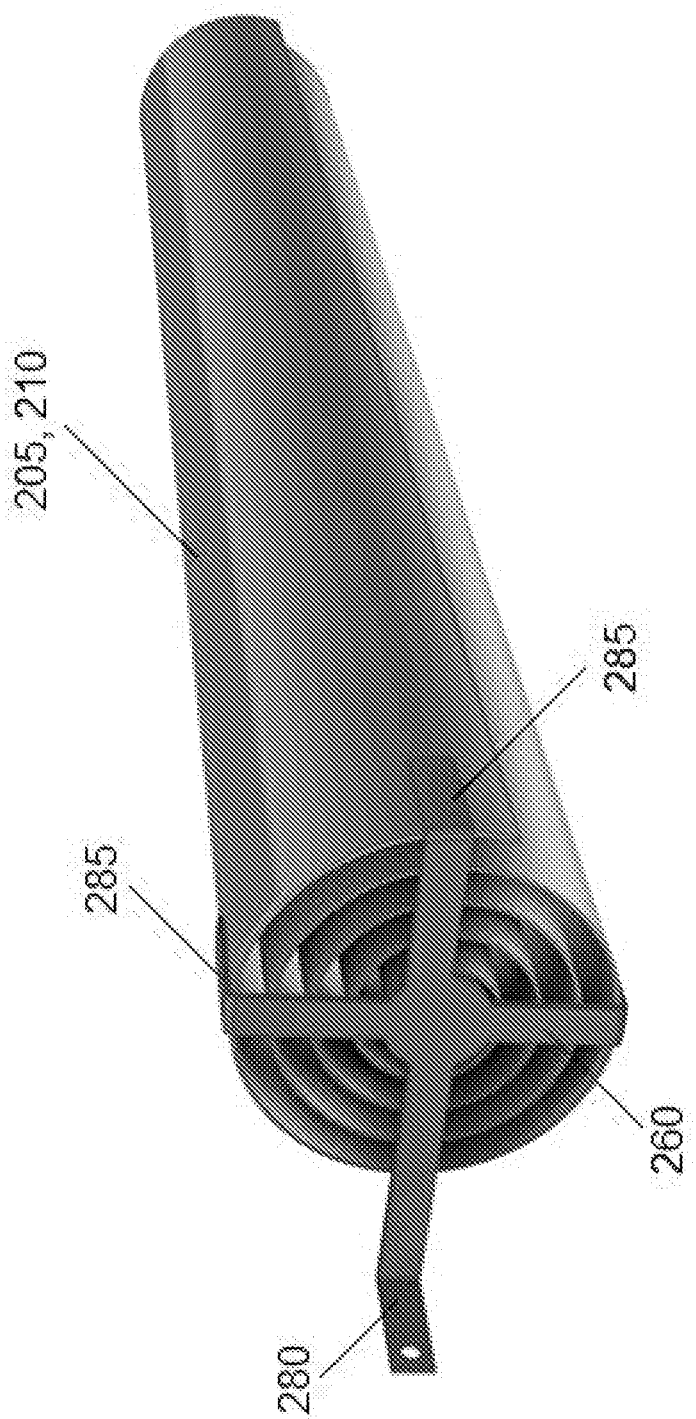

FIG. 12C

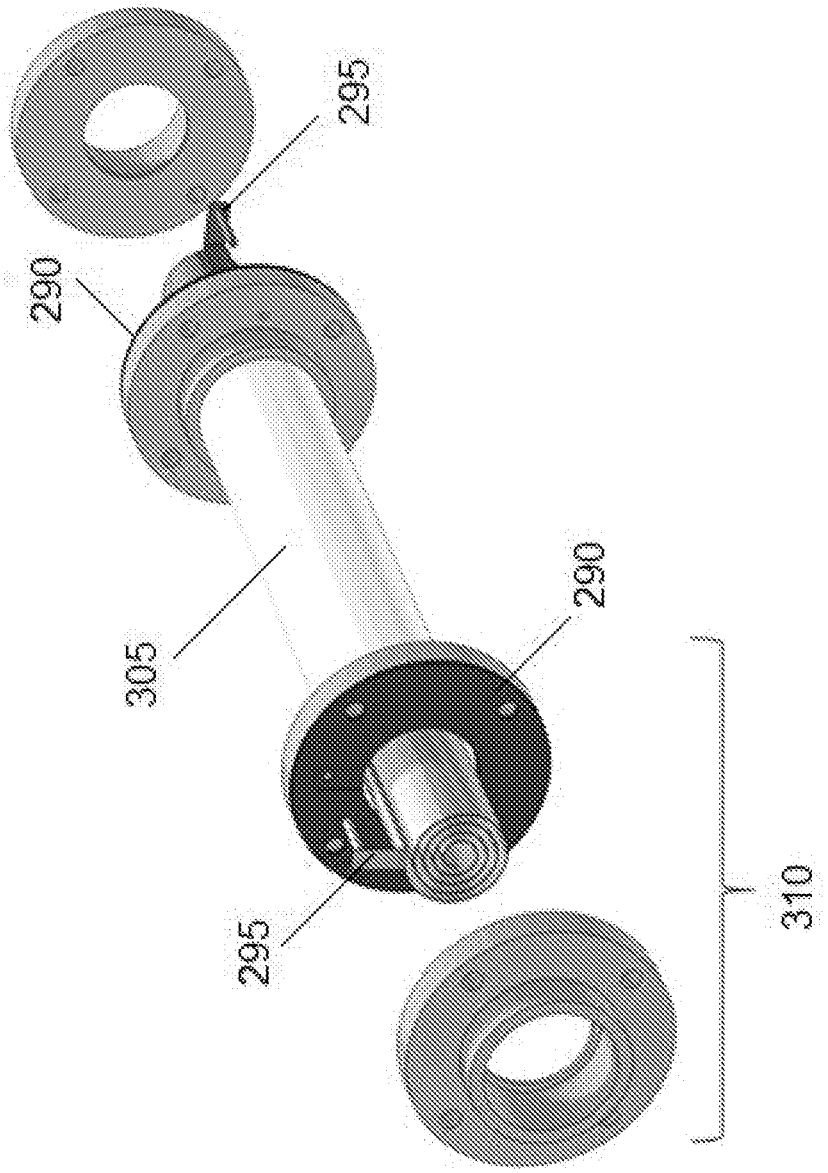

FIG. 13A

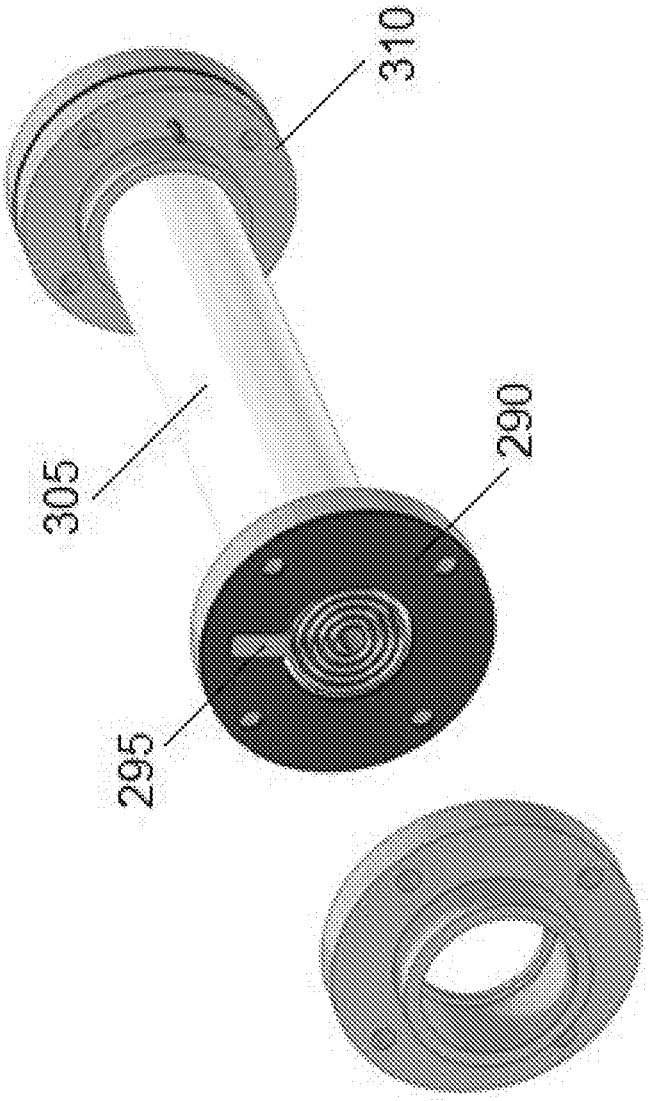

FIG. 13B

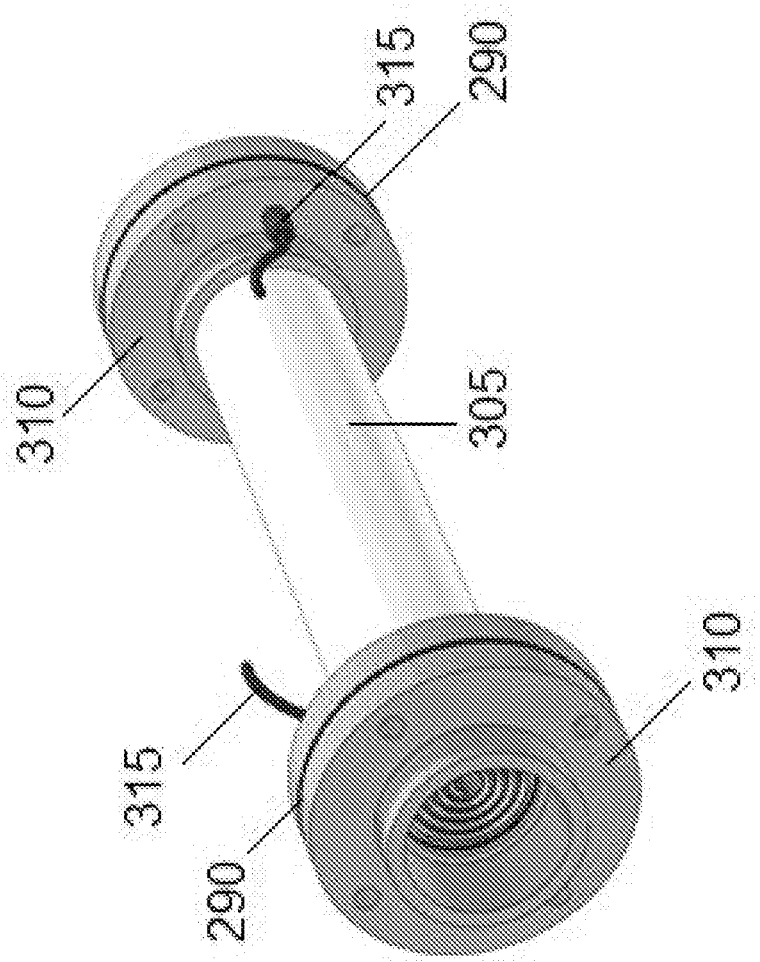

FIG. 13C


400
430
425
Product Solution
405
435
415
440
410
420
Feed Electrolyte Solution

FIG. 14A

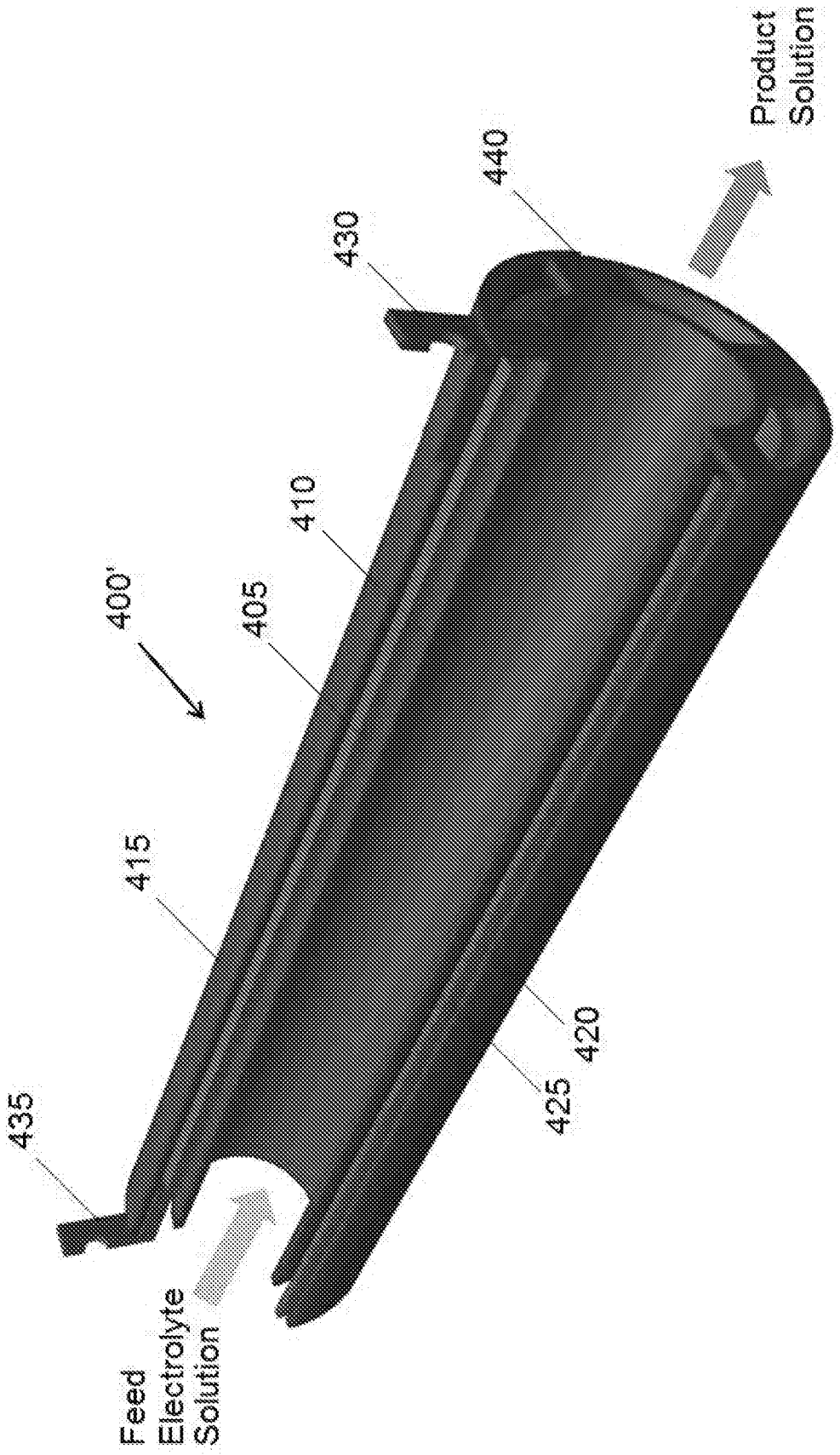
Product Solution
440
430
410
400'
405
415
435
420
425
Feed Electrolyte Solution

FIG. 14B

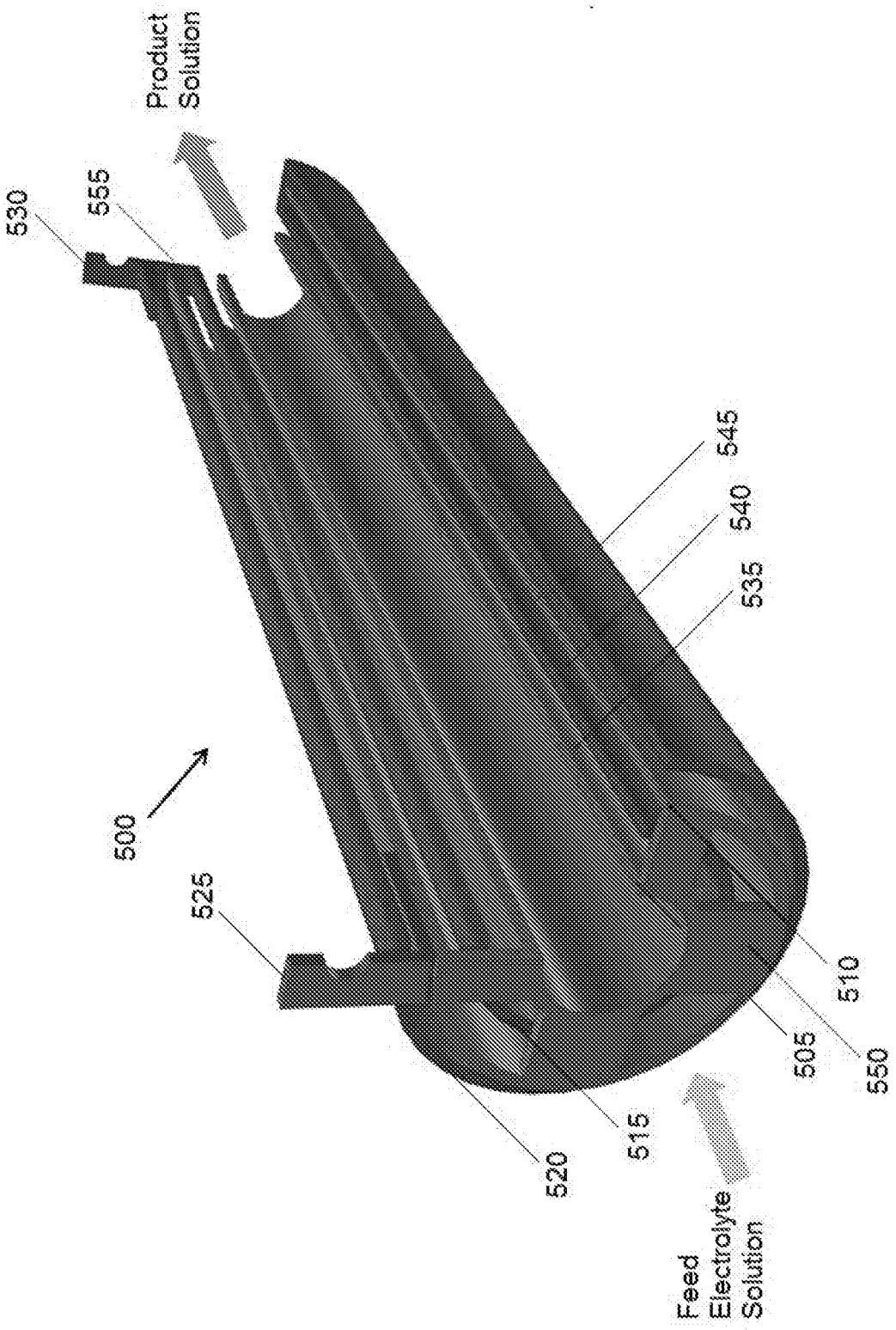
Product Solution
530
555
545
540
535
500
525
510
505
550
515
520
Feed Electrolyte Solution

FIG. 15

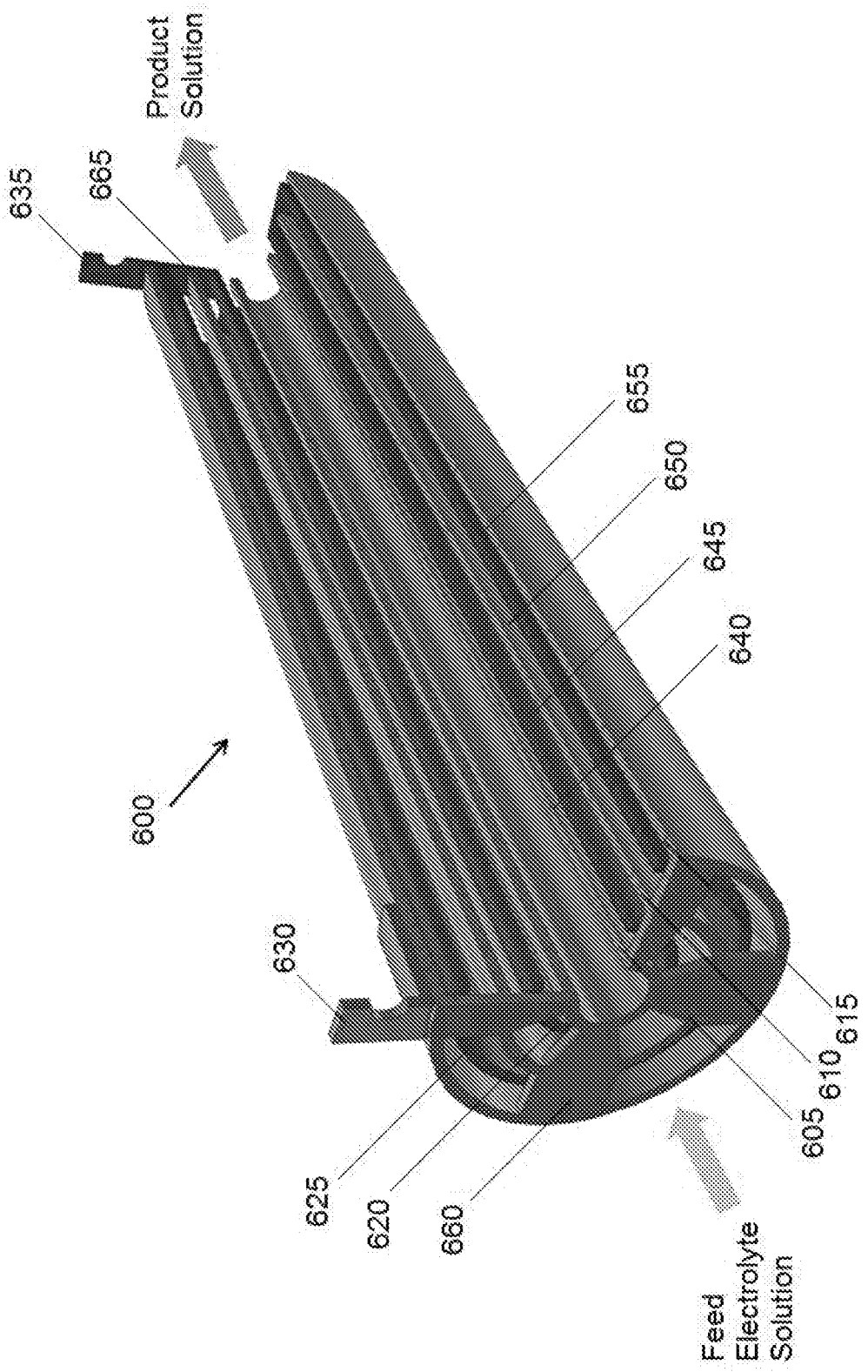
Product Solution
635
665
655
650
645
640
600
630
625
620
660
605
610
615
Feed Electrolyte Solution

FIG. 16

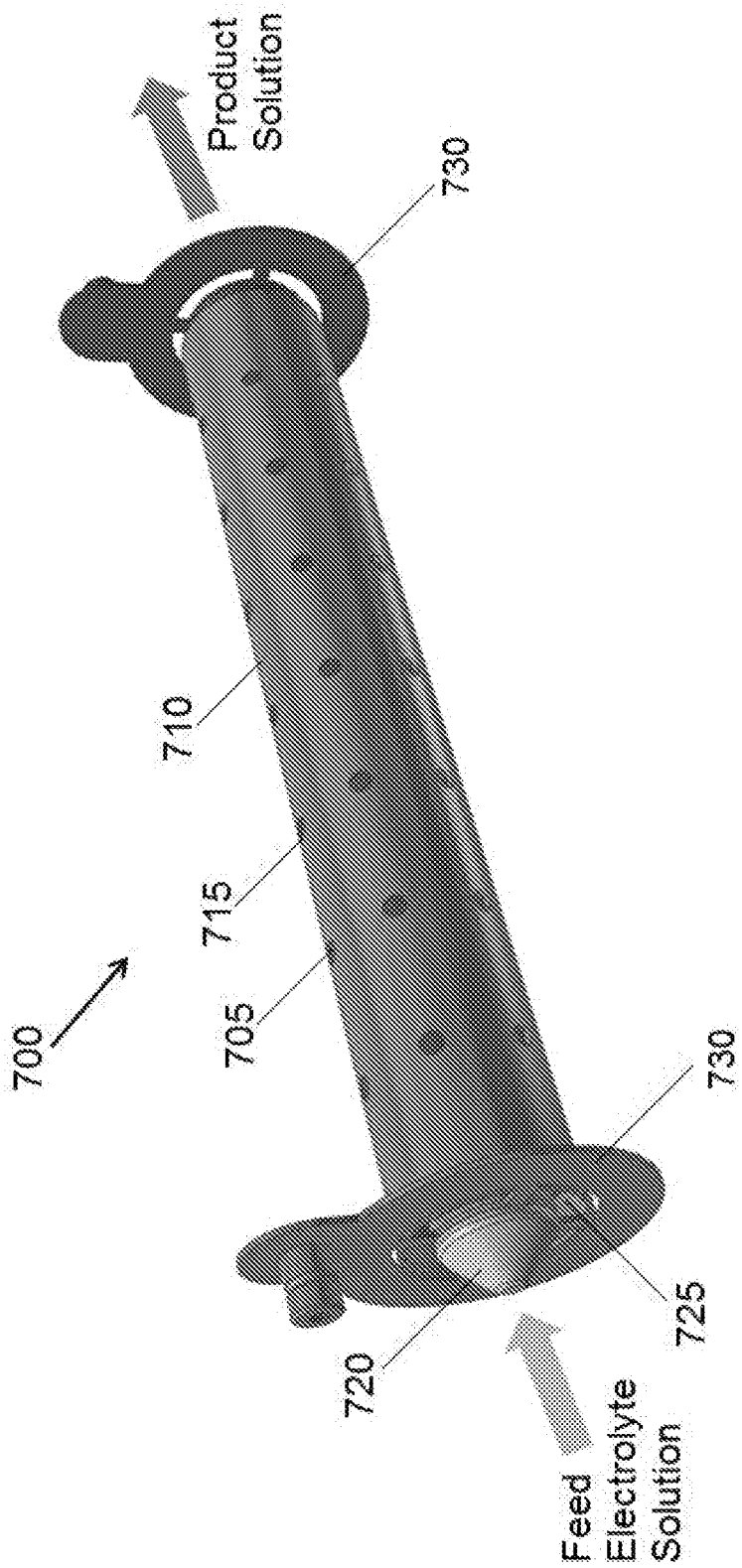
Product Solution
730
710
715
705
700
730
725
720
Feed Electrolyte Solution

FIG. 17

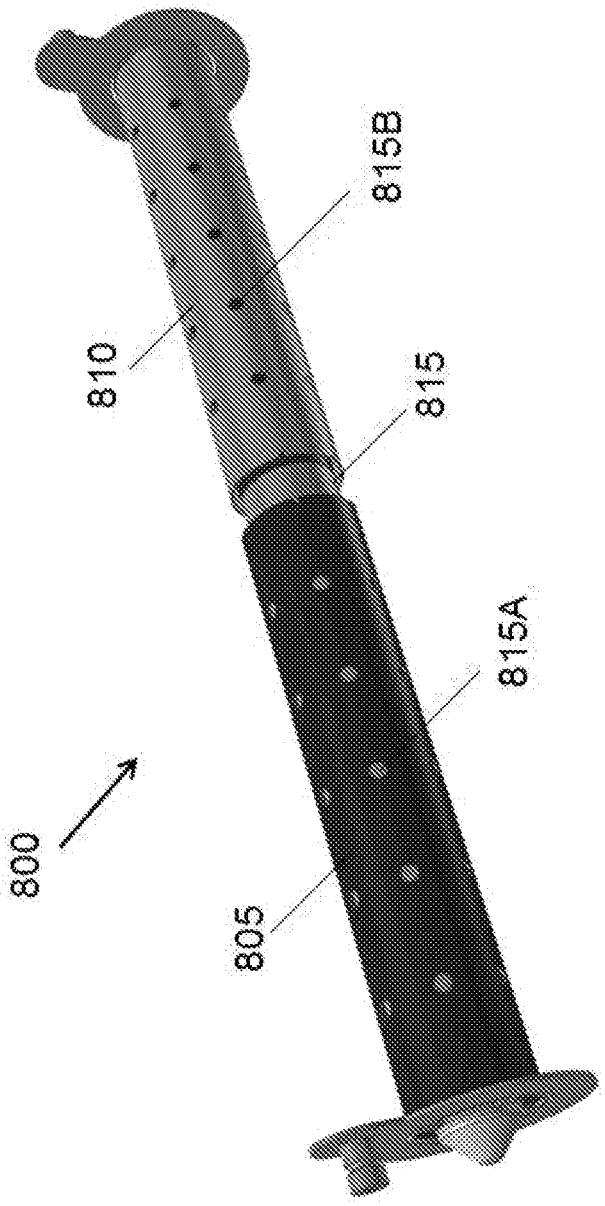

FIG. 18A

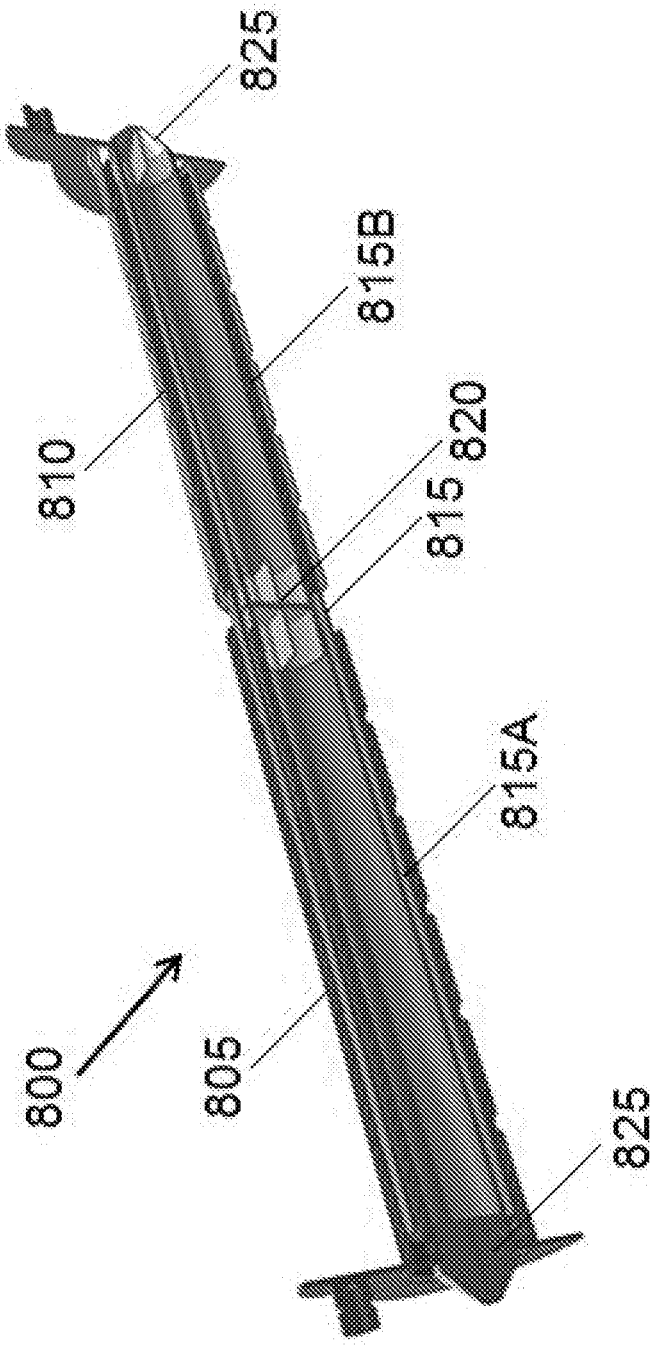

FIG. 18B

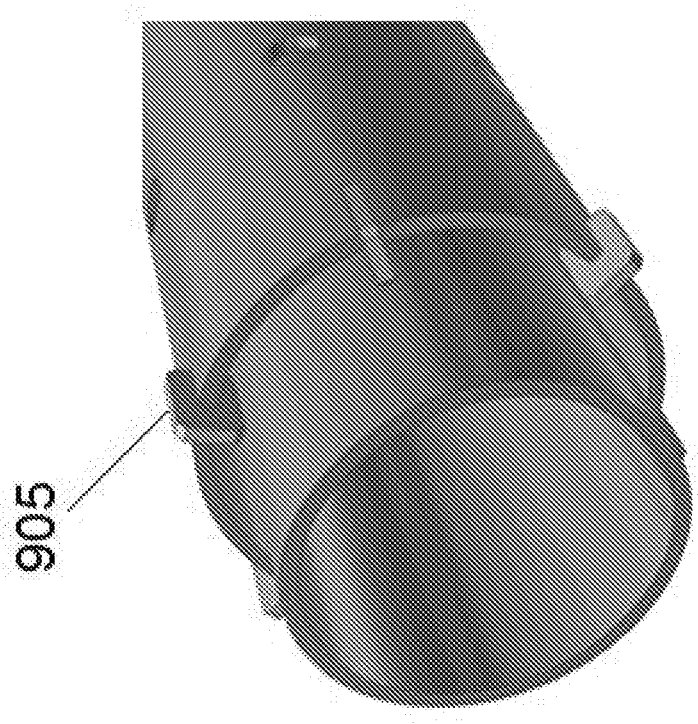

FIG. 19A

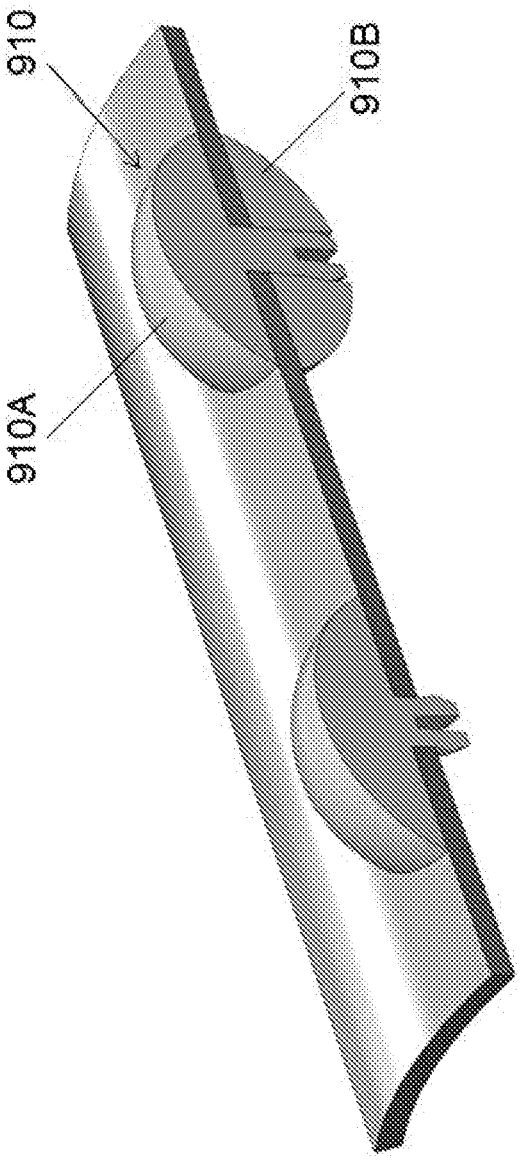

FIG. 19B

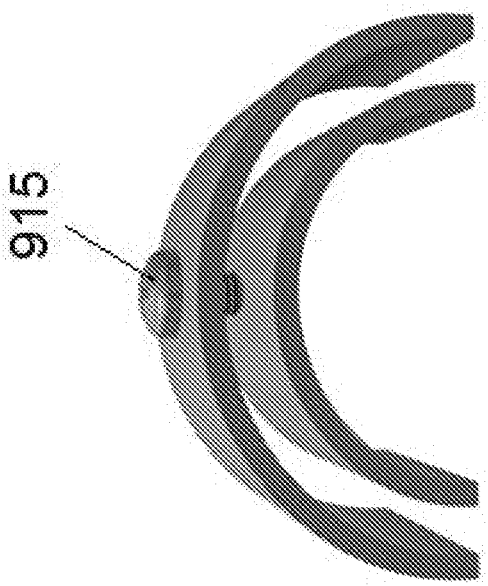

FIG. 19C

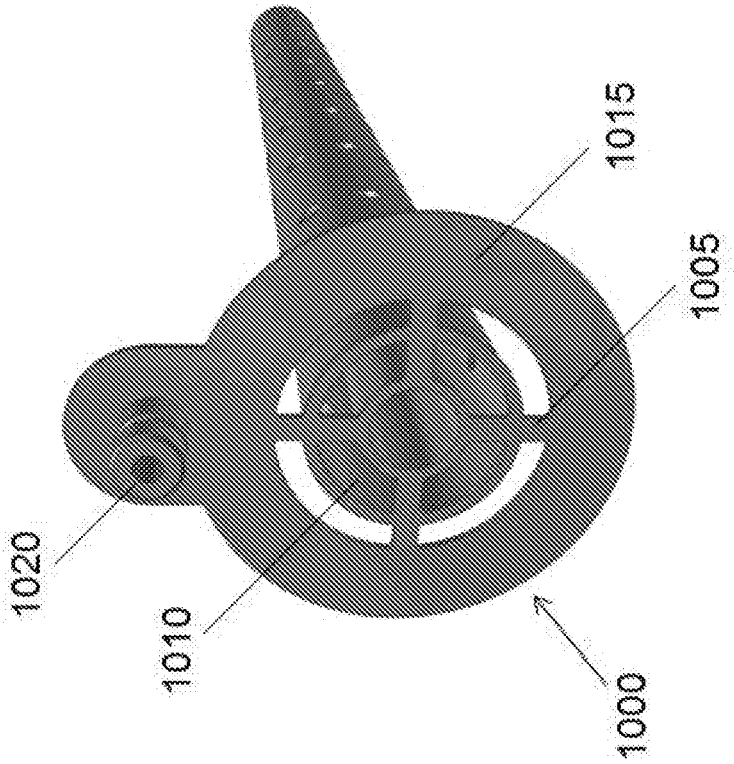

FIG. 20A

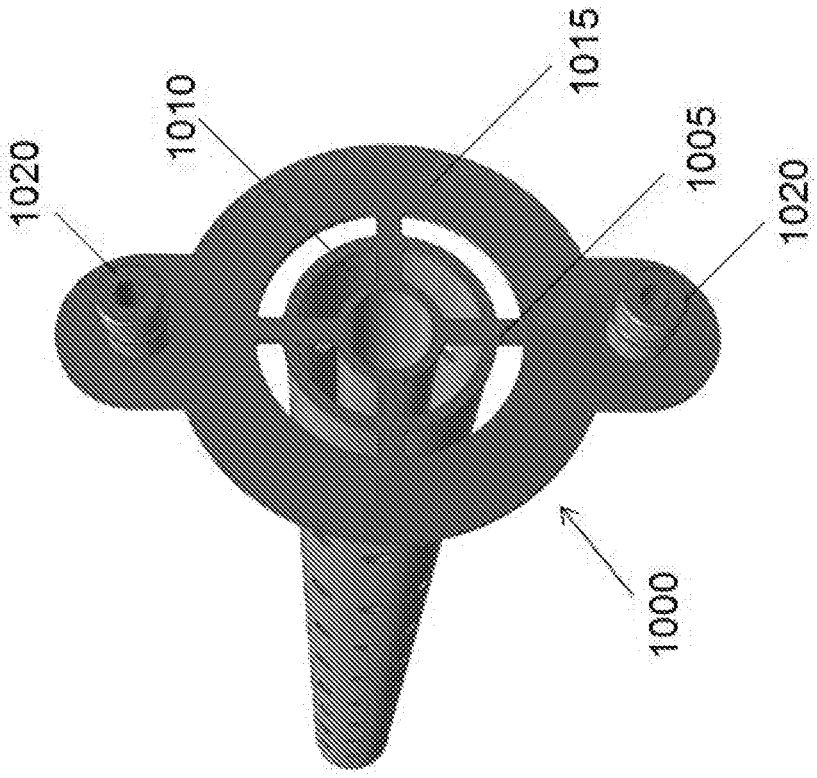

FIG. 20B

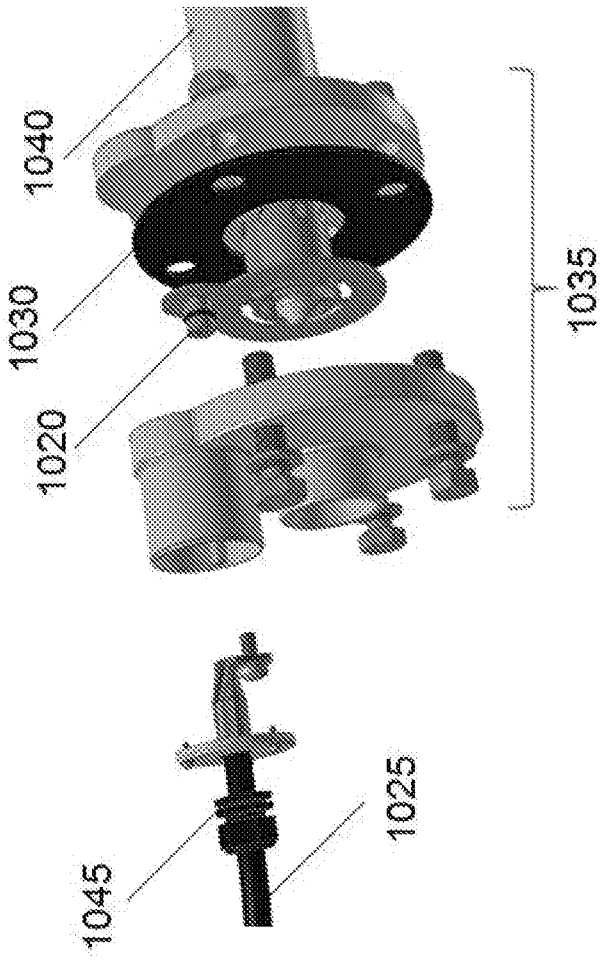

FIG. 21A

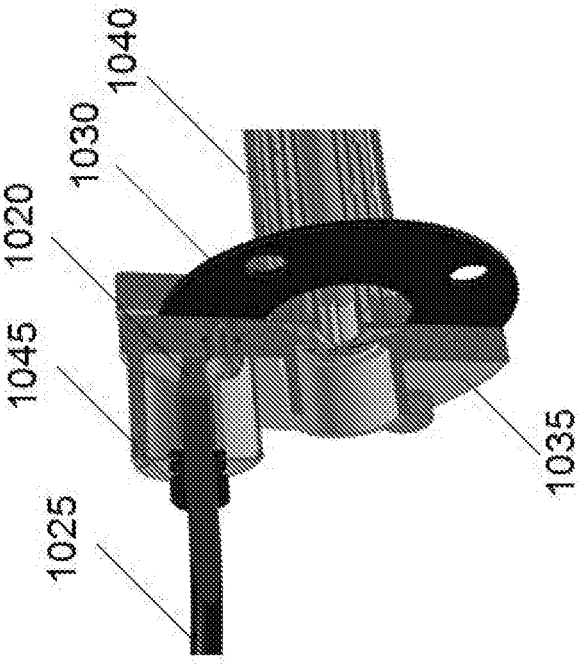

FIG. 21B

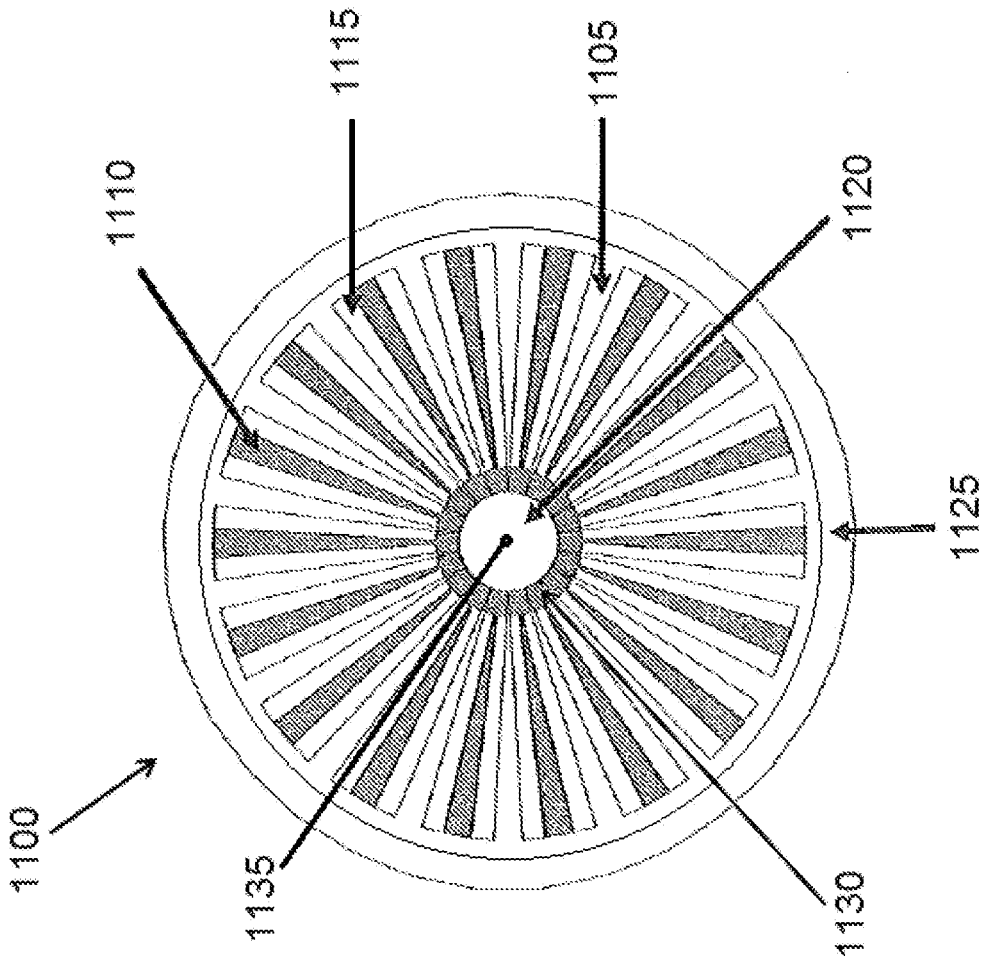

FIG. 22A

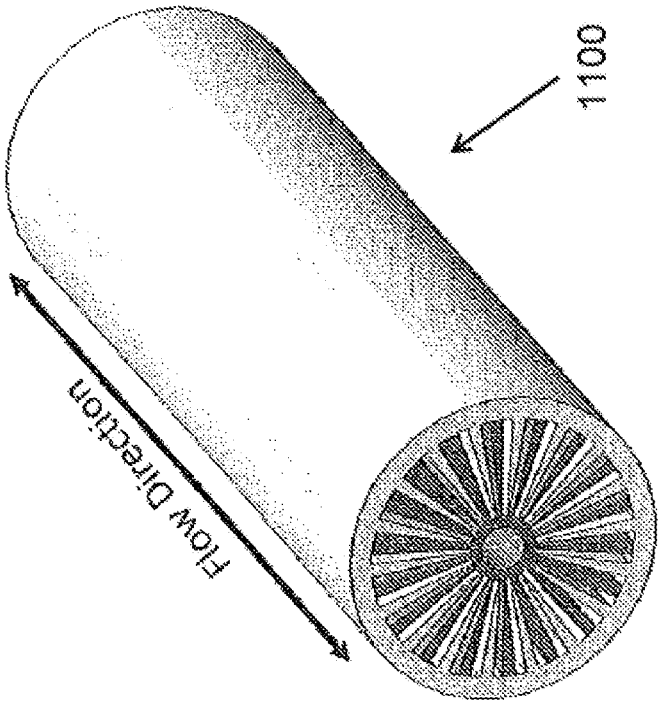

FIG. 22B

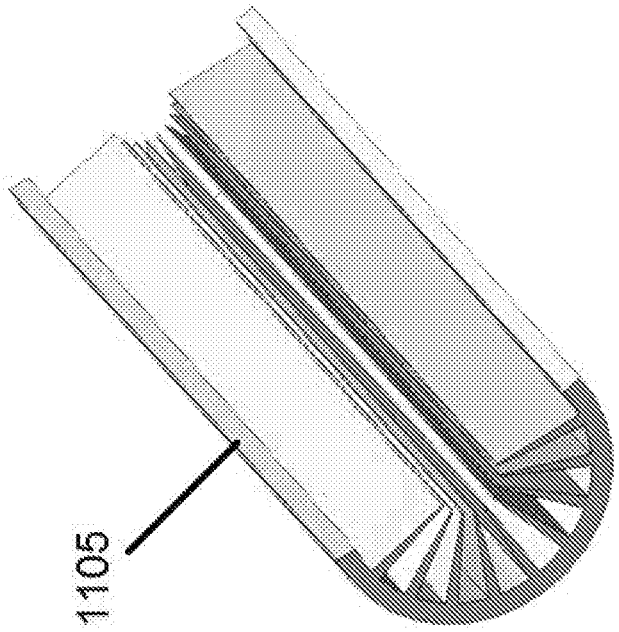

FIG. 22C

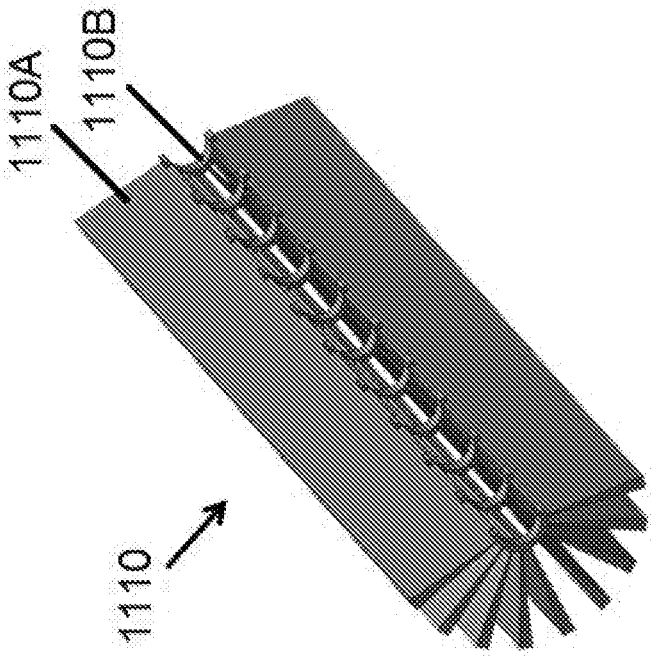

FIG. 22D

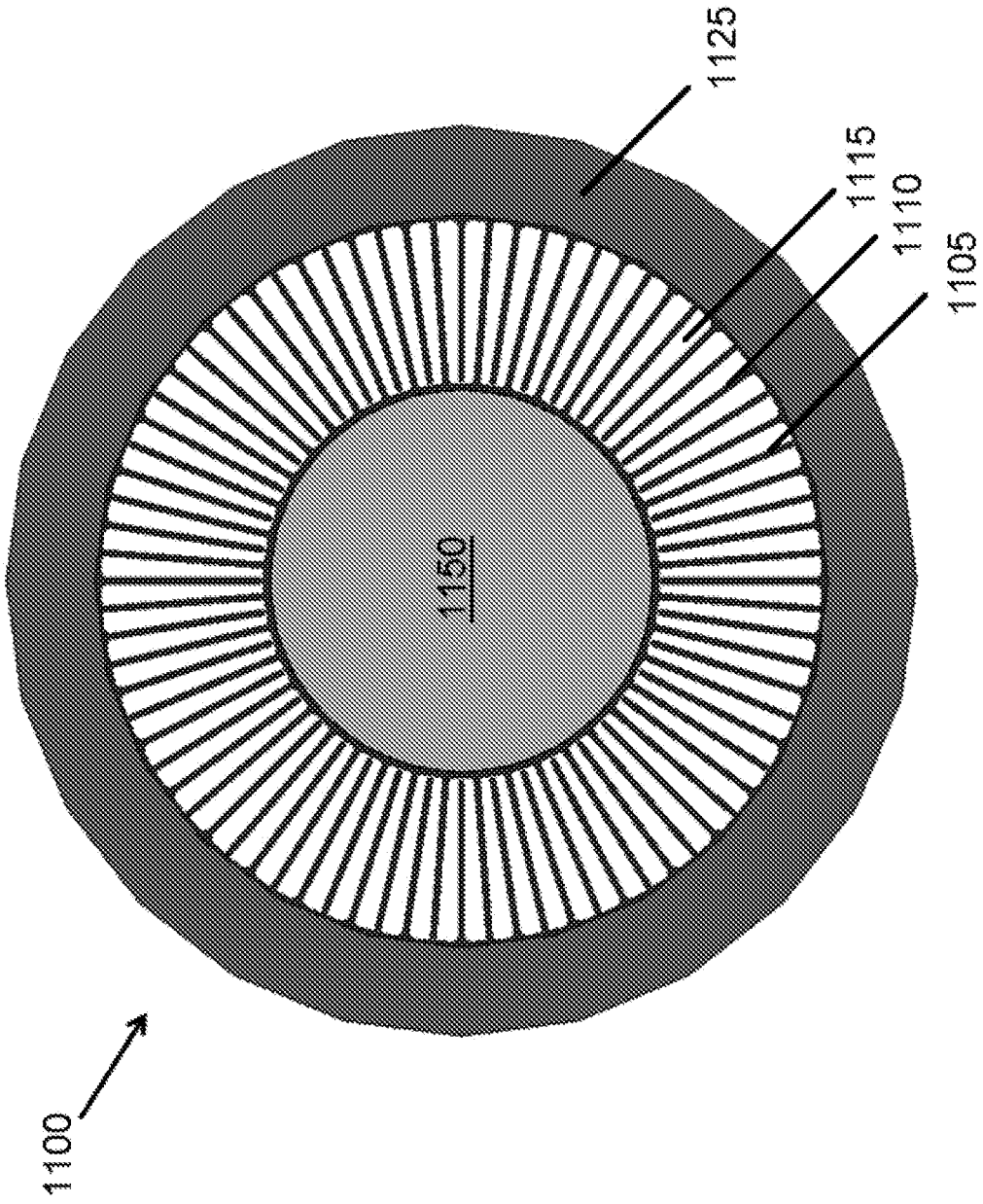

FIG. 22E

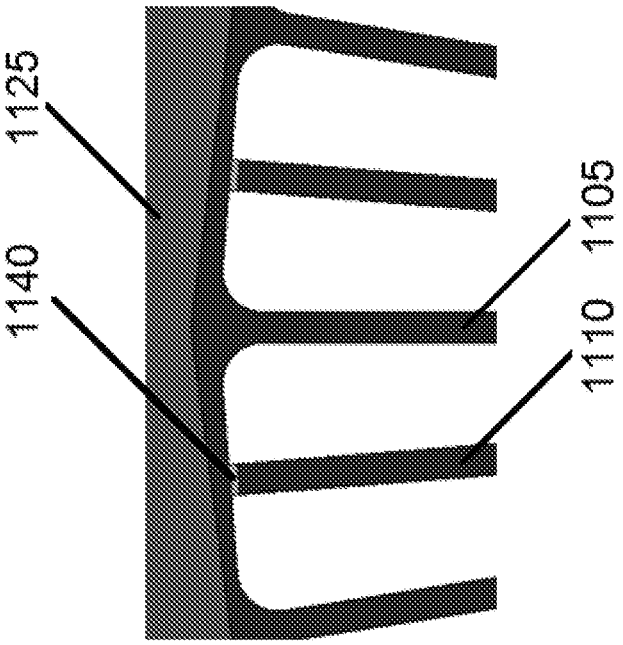

FIG. 22F

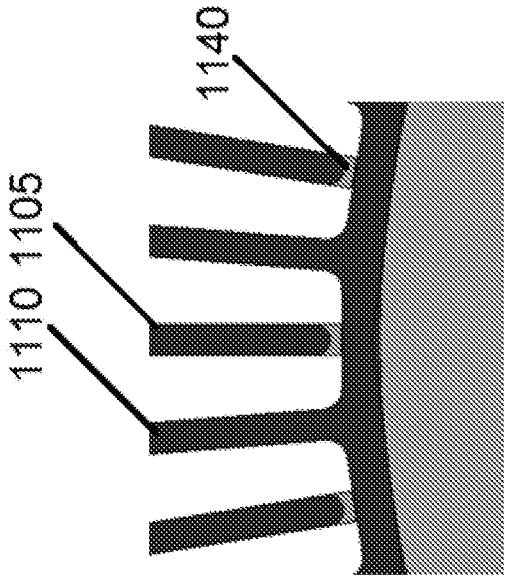

FIG. 22G

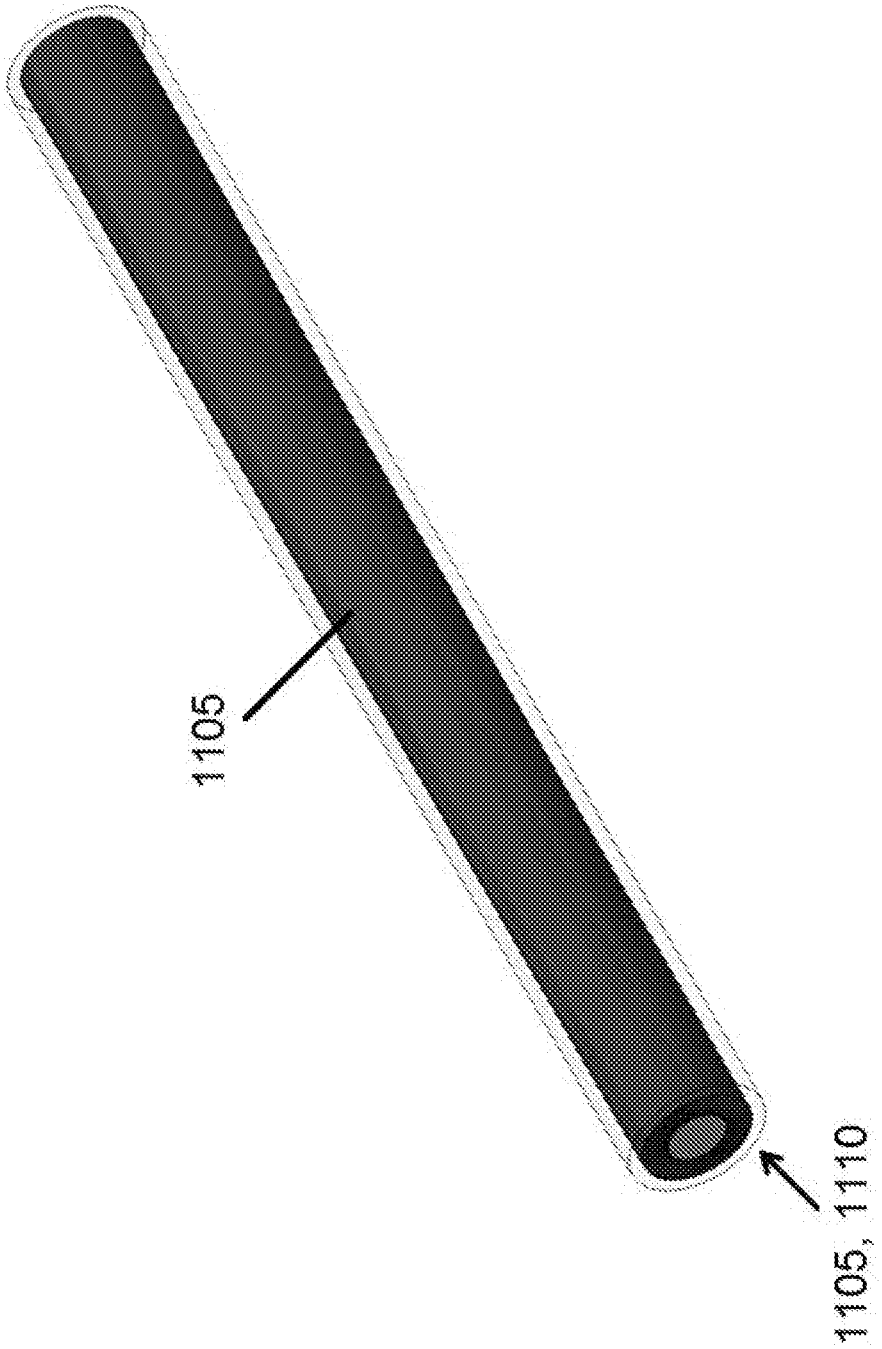

FIG. 22H

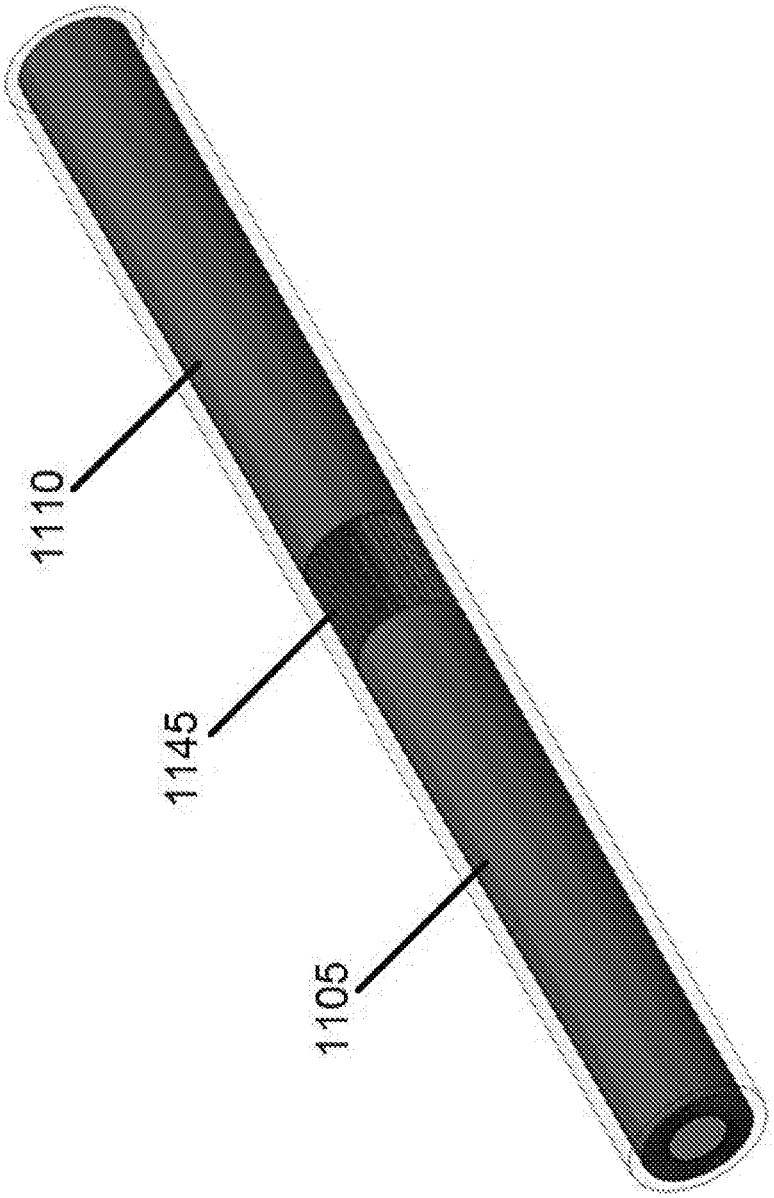

FIG. 22I

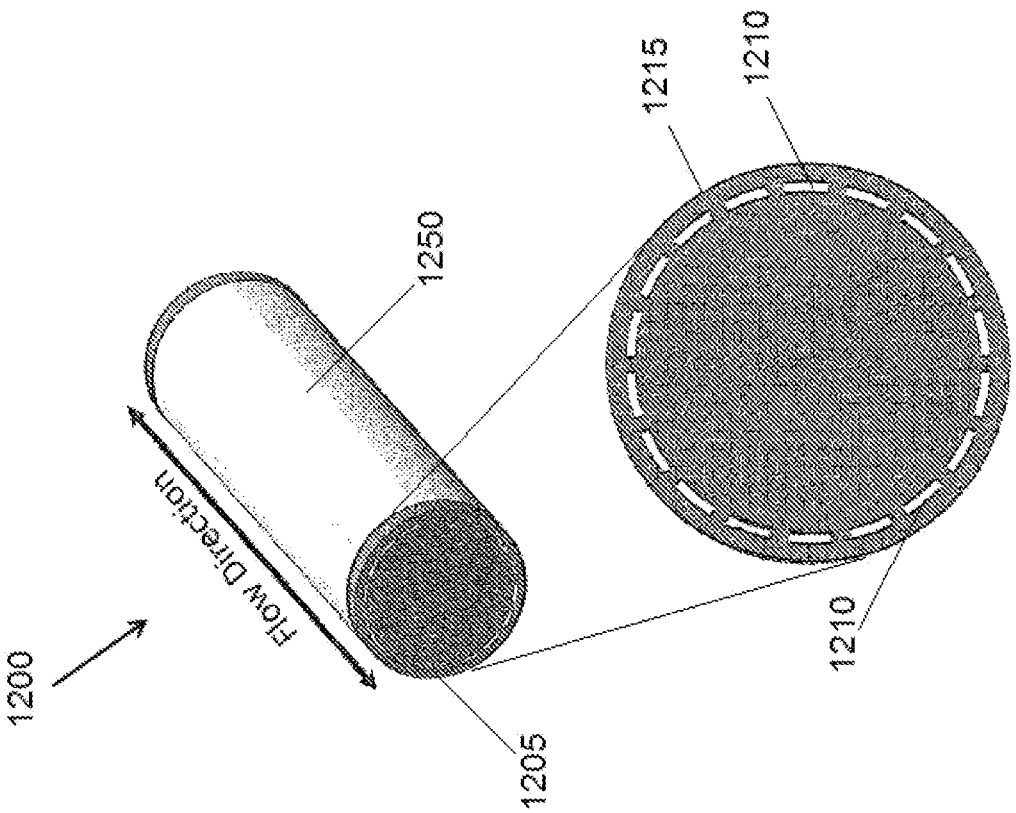

FIG. 23A

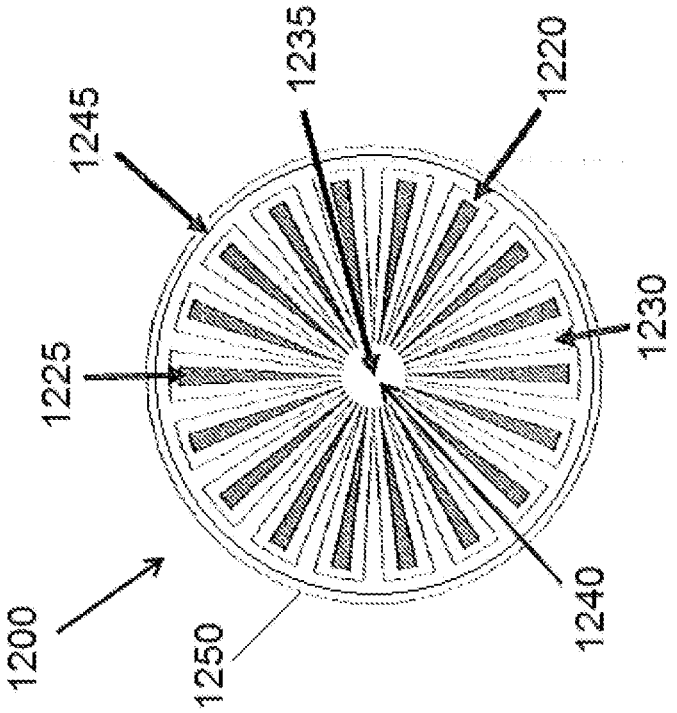

FIG. 23B

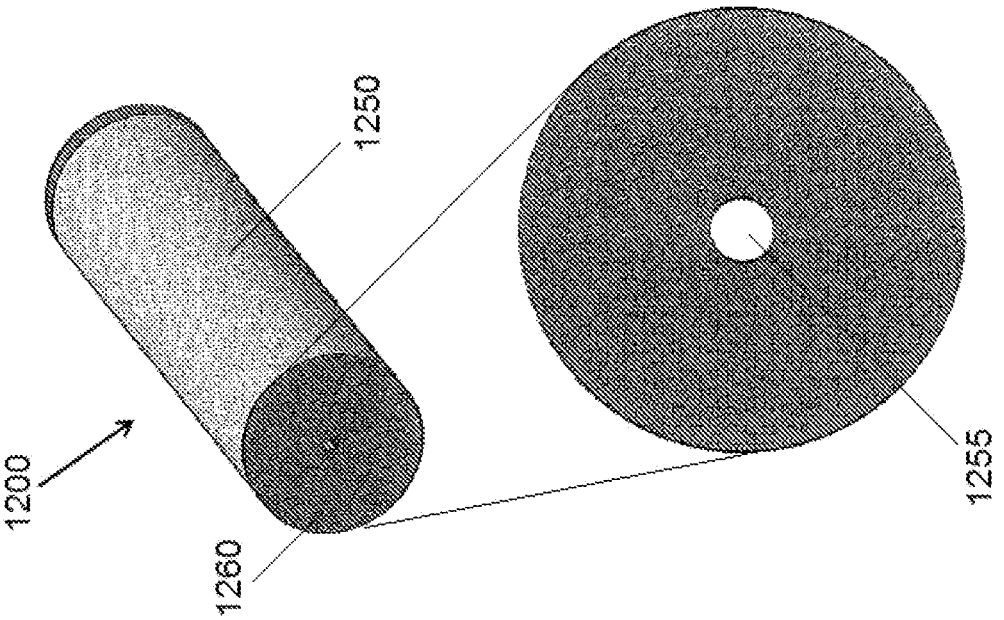

FIG. 23C

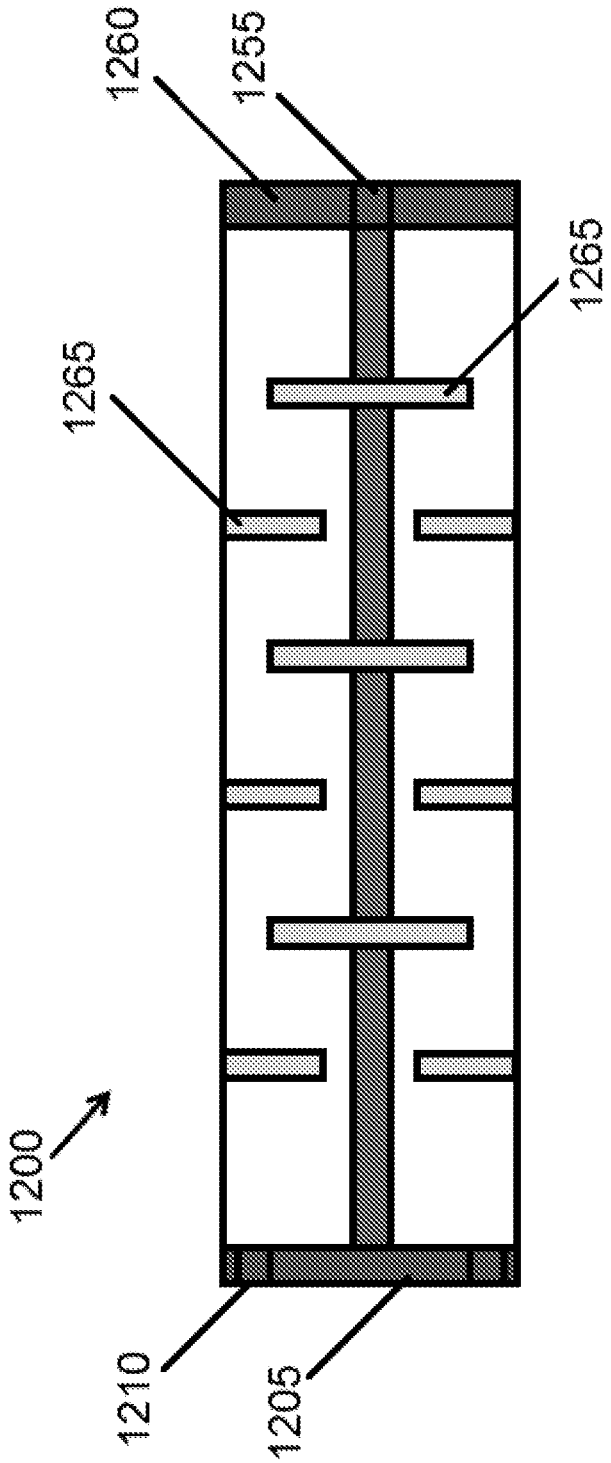

FIG. 23D

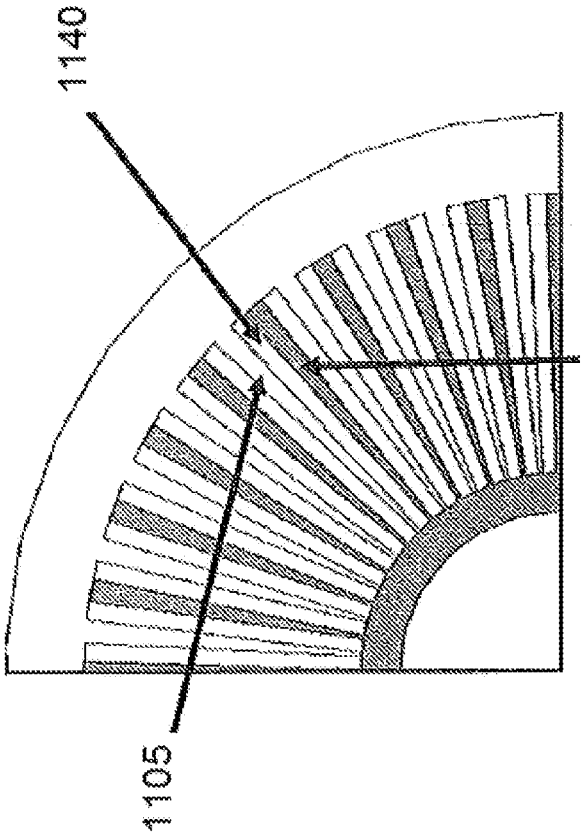

FIG. 24

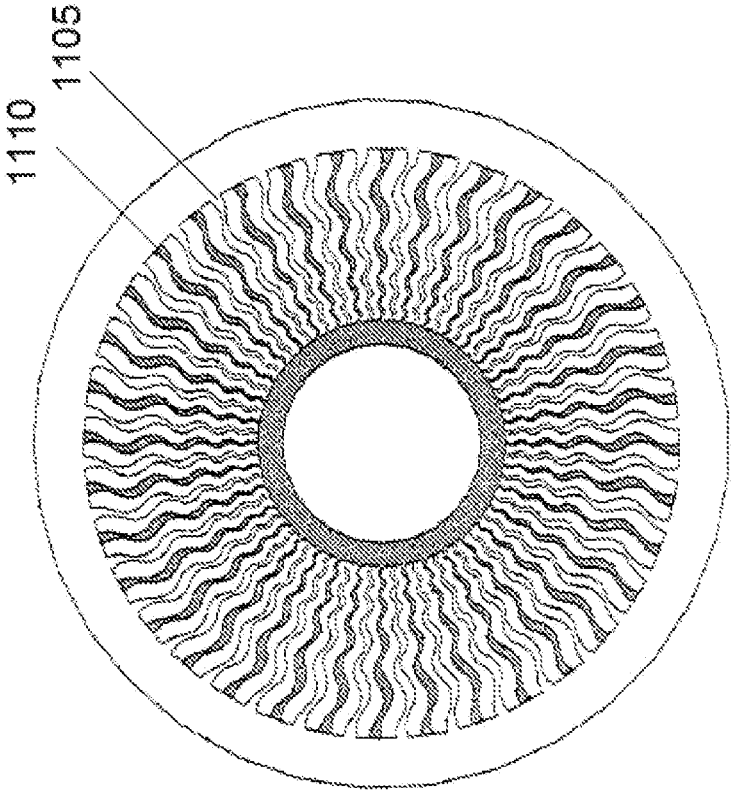

FIG. 25A

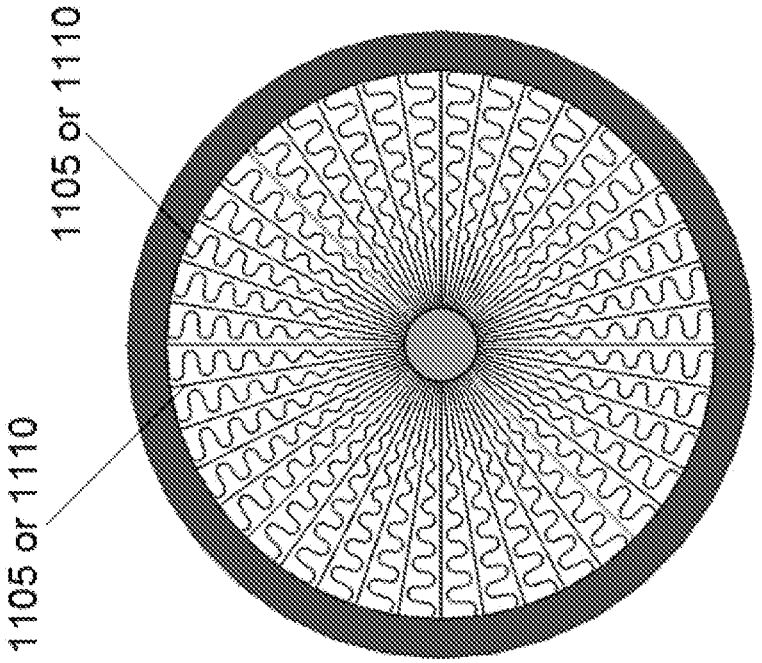

FIG. 25B

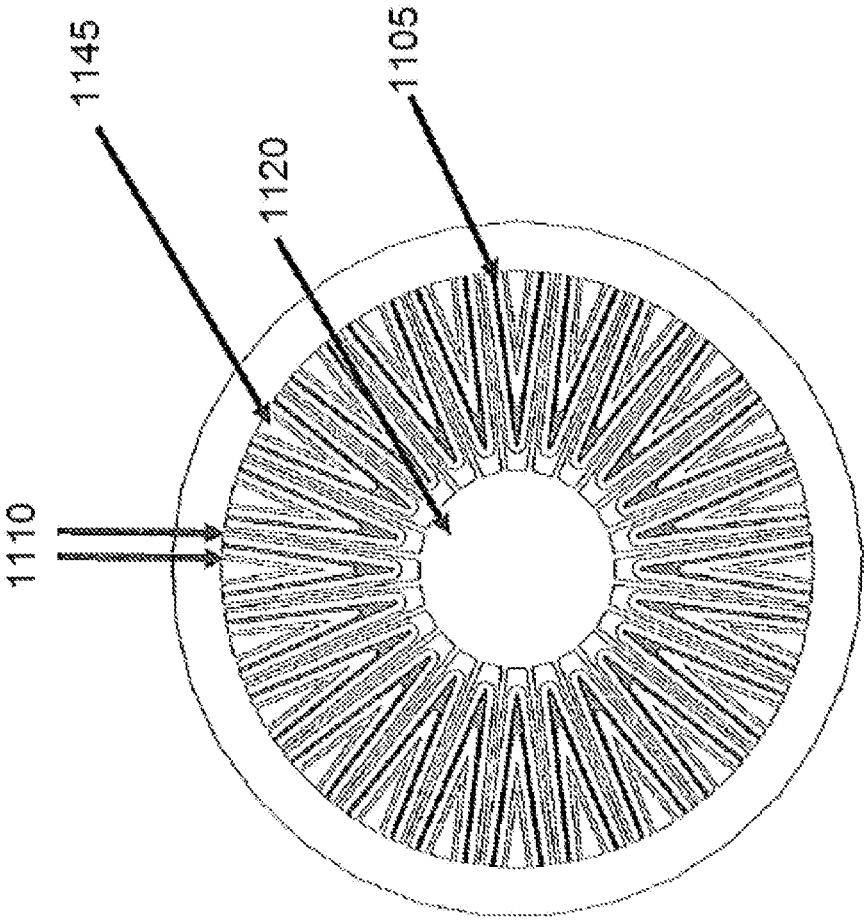

FIG. 26

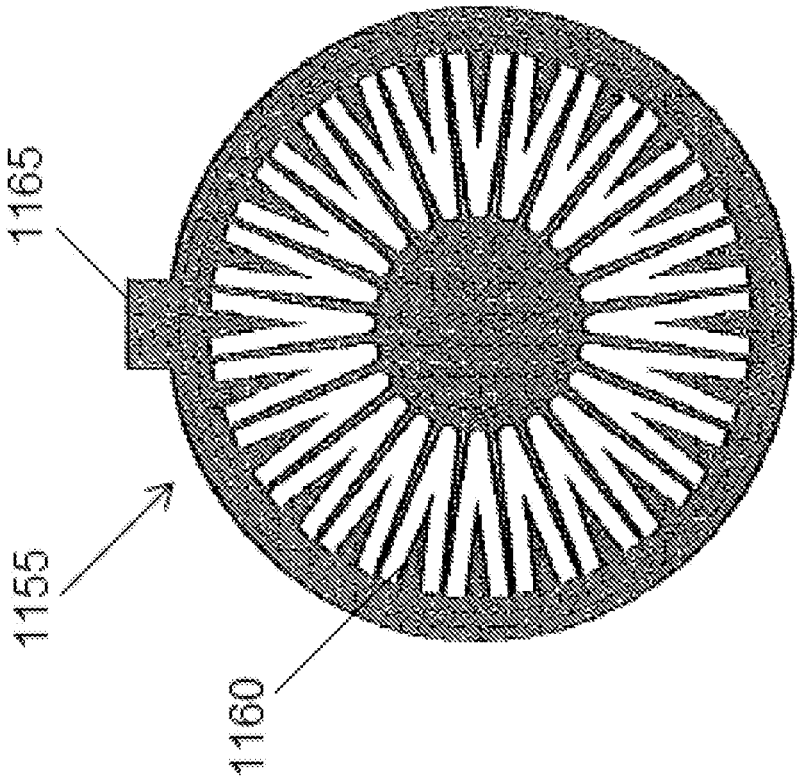

FIG. 27A

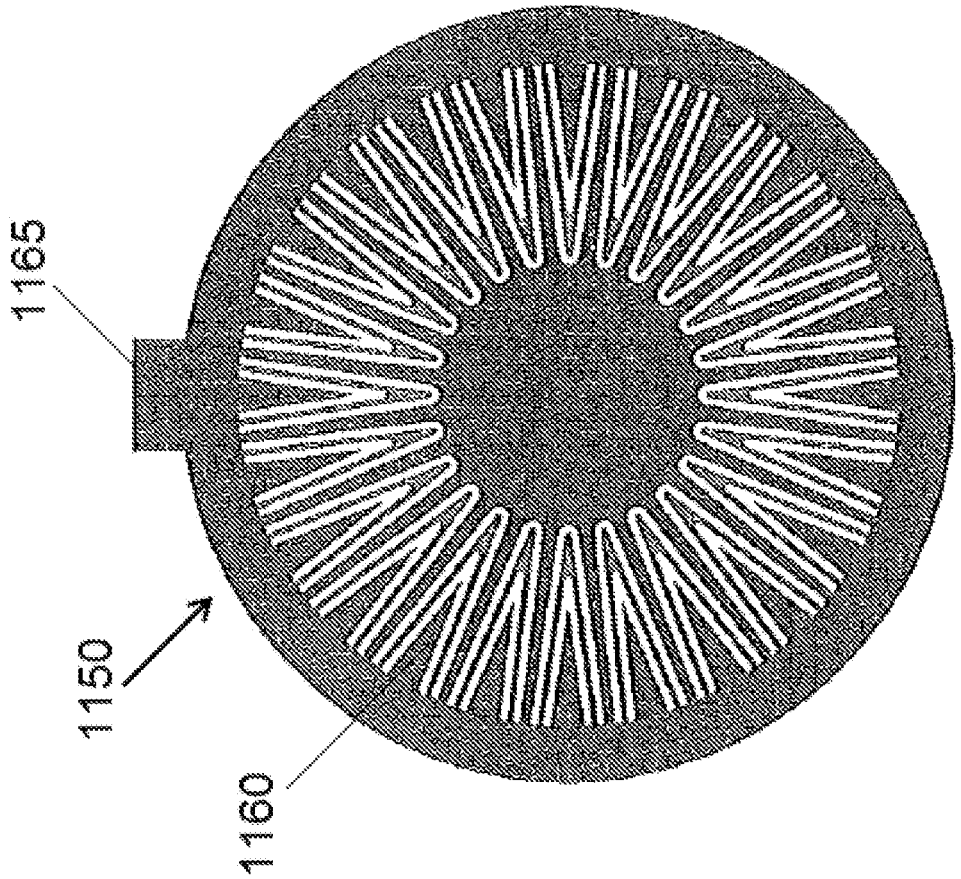

FIG. 27B

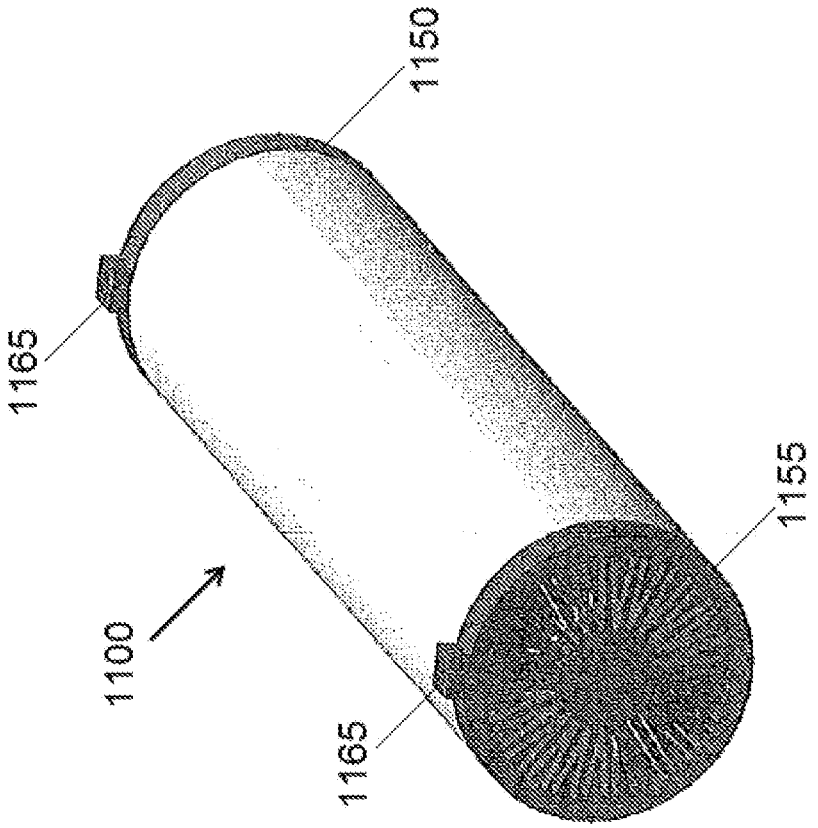

FIG. 27C

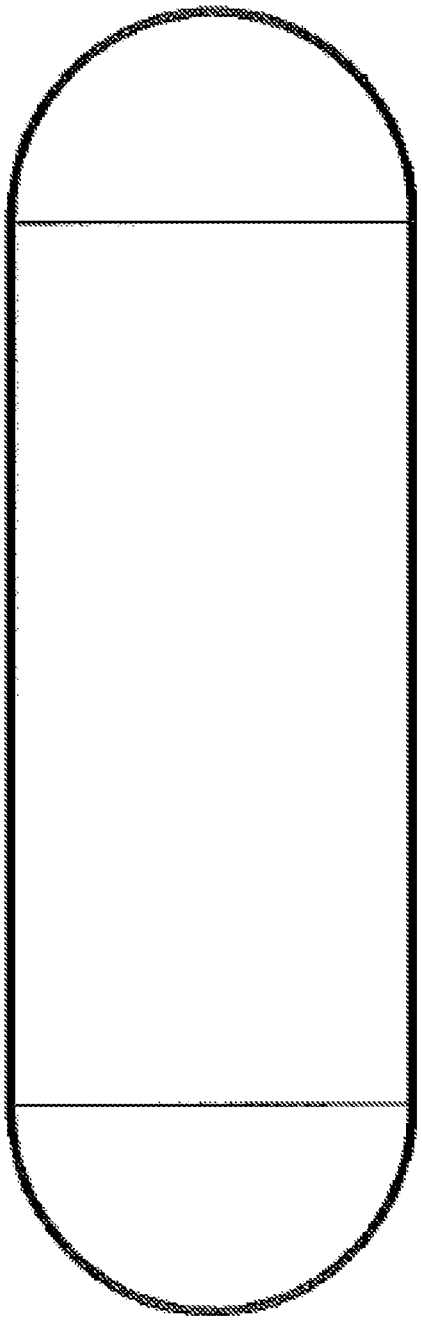

FIG. 28A

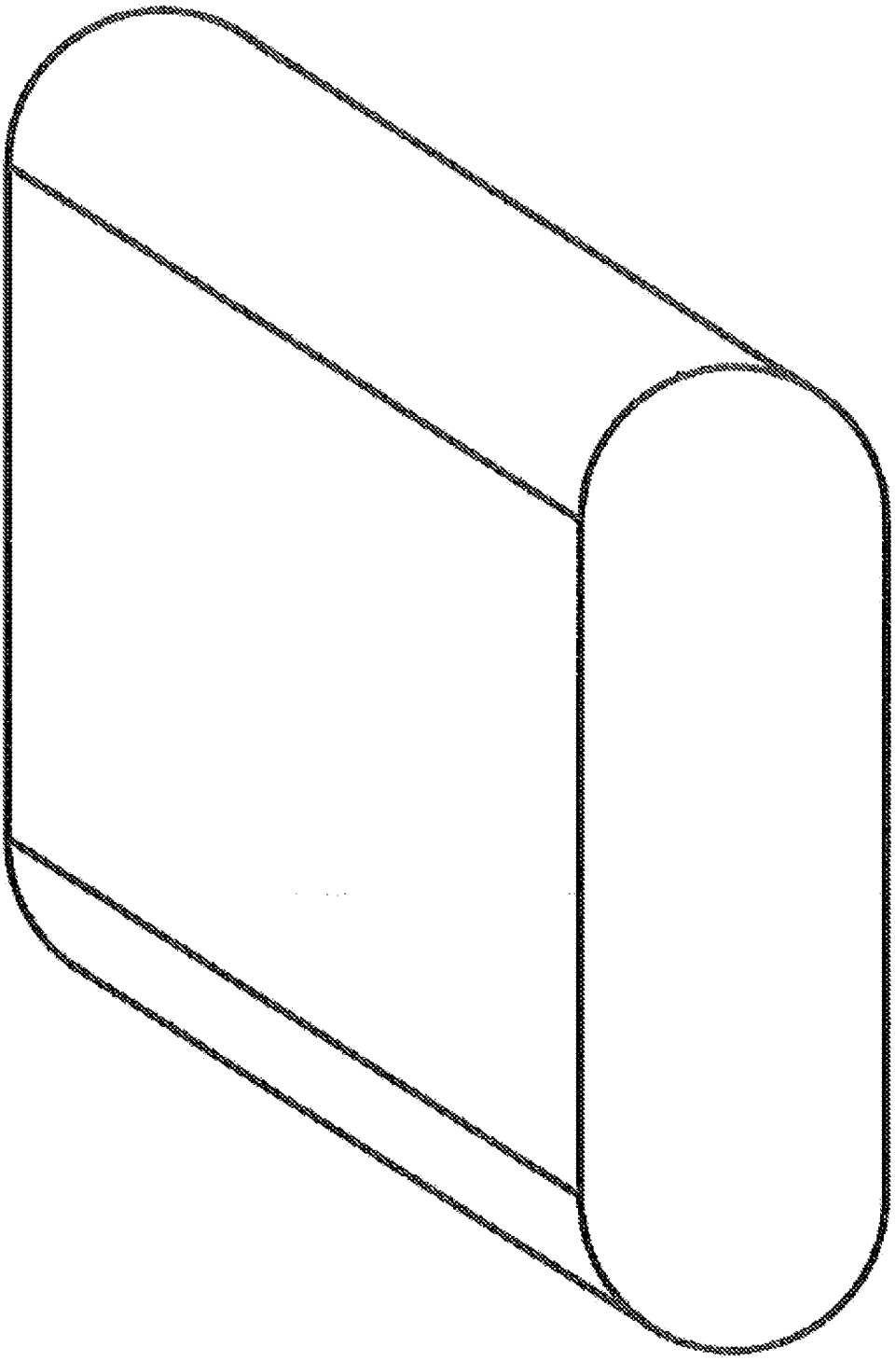

FIG. 28B

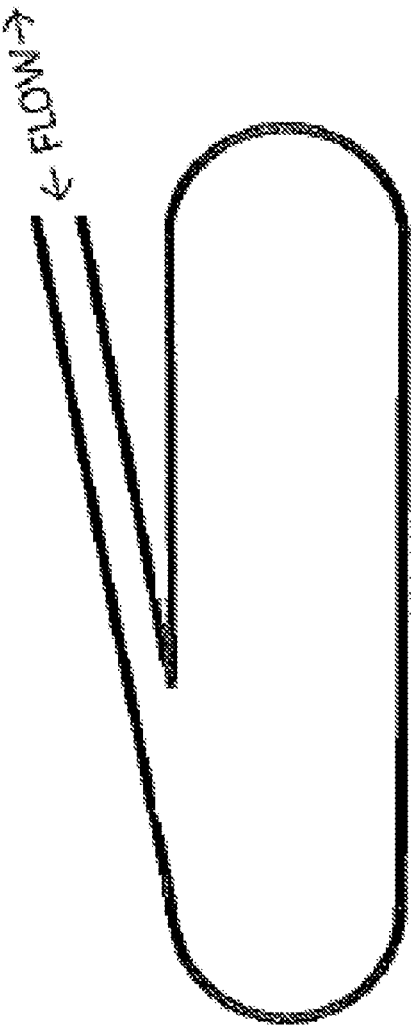

FIG. 29A

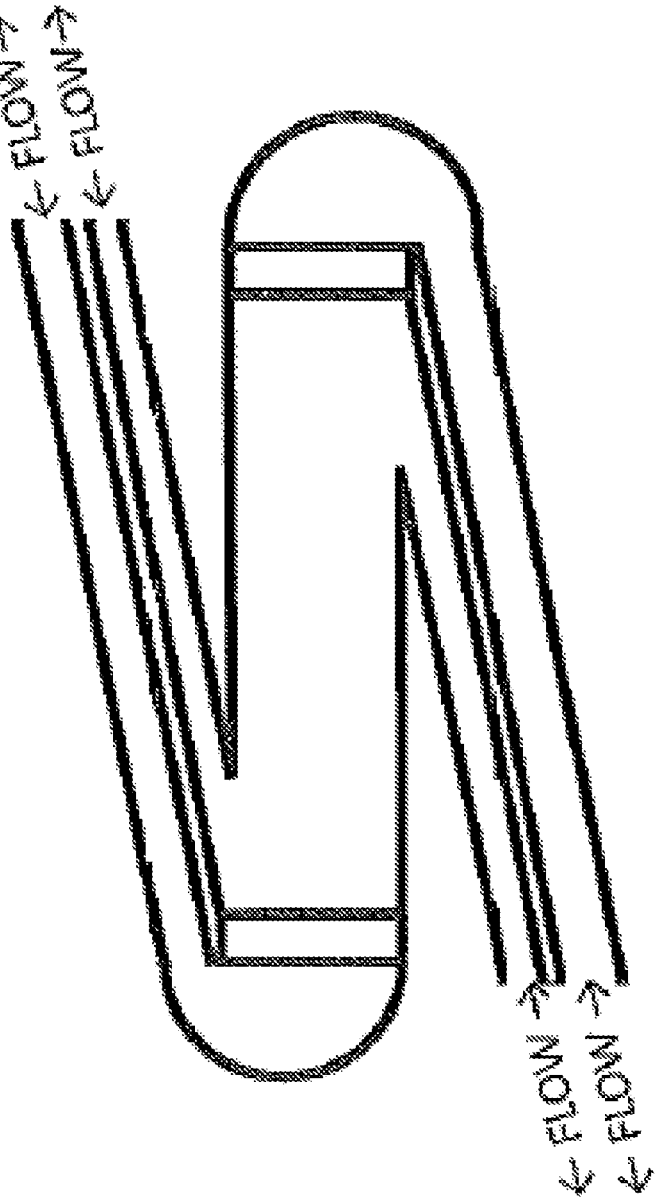

FIG. 29B

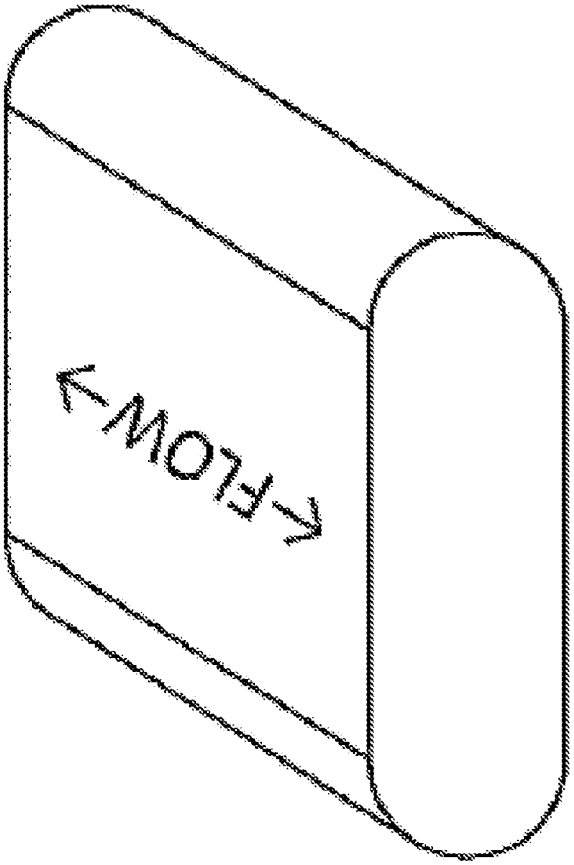

FIG. 29C

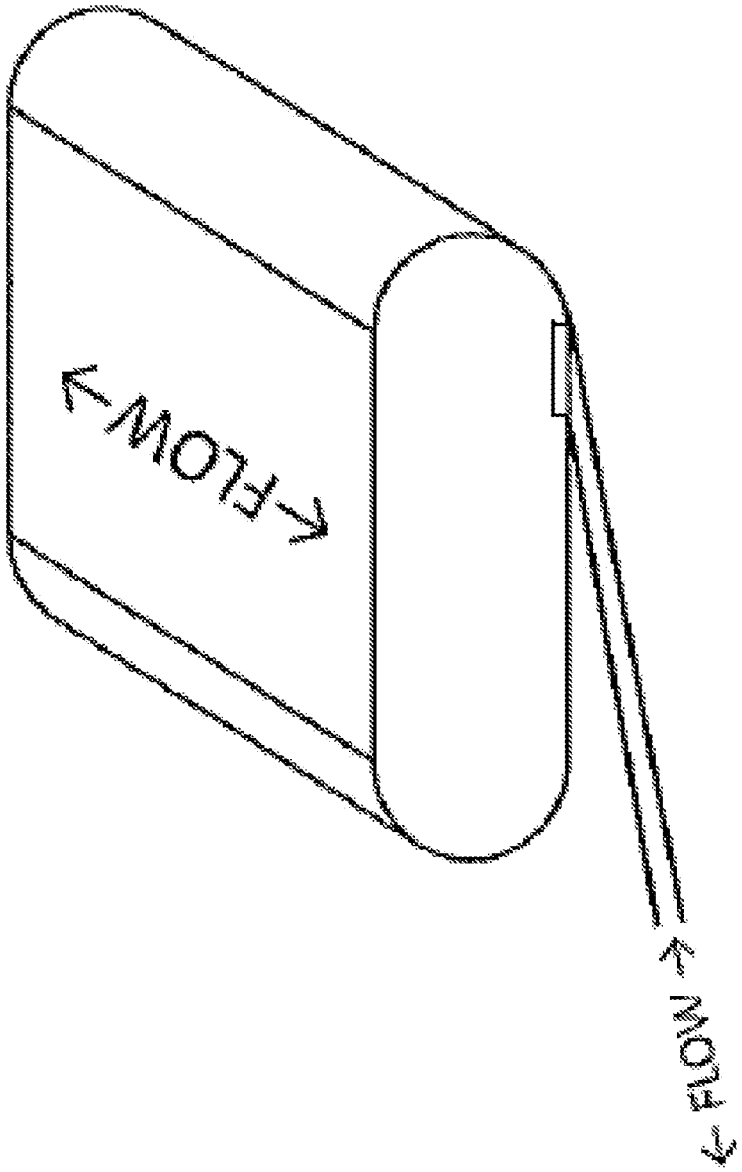

FIG. 29D

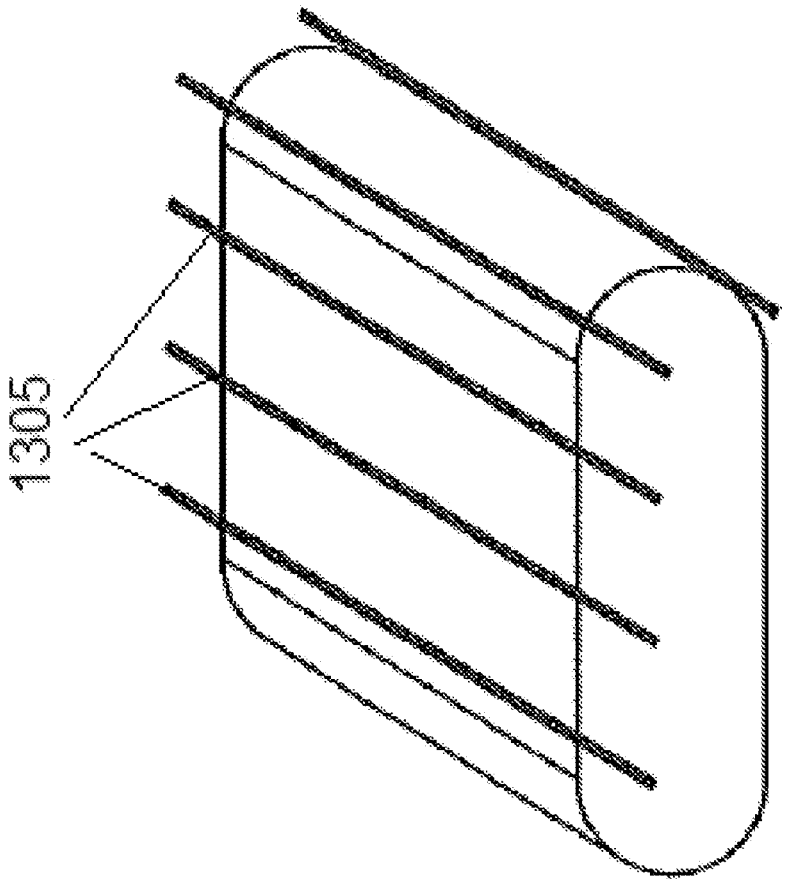

FIG. 30A

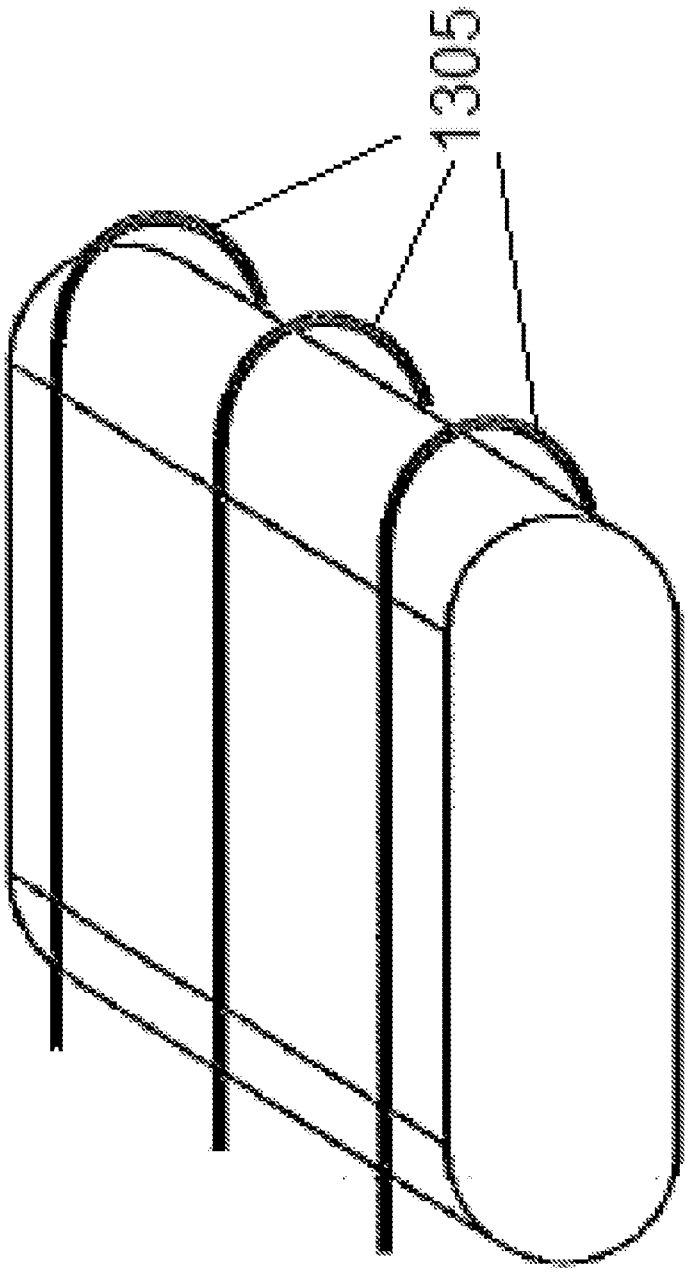

FIG. 30B

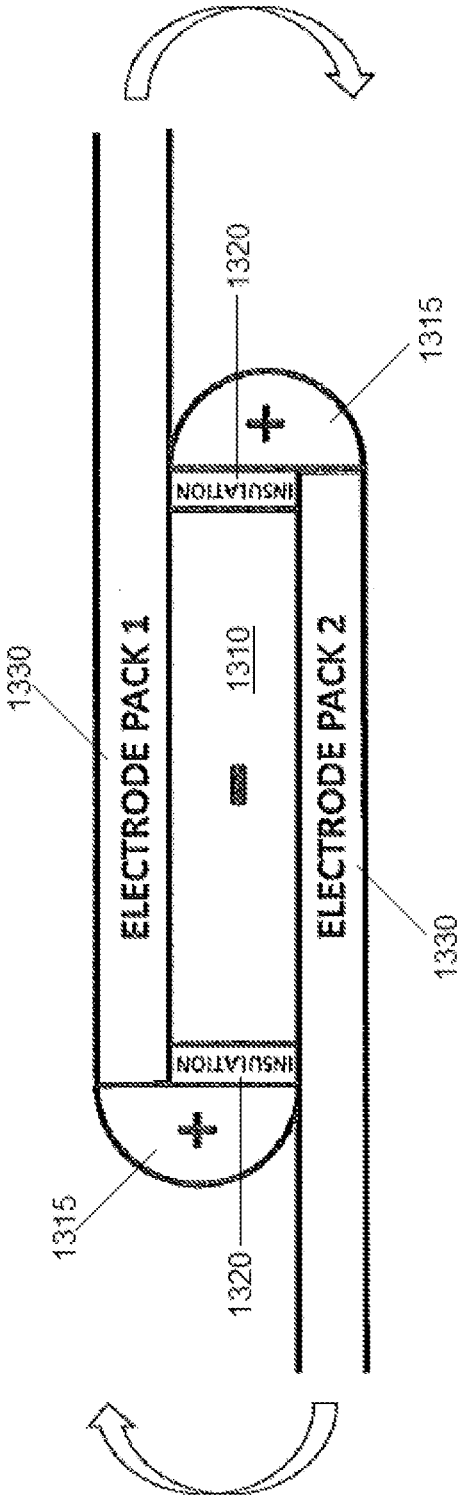
1320
1315
INSULATION
1330
ELECTRODE PACK 1
1310
ELECTRODE PACK 2
1330
INSULATION
1315
1320

FIG. 30C

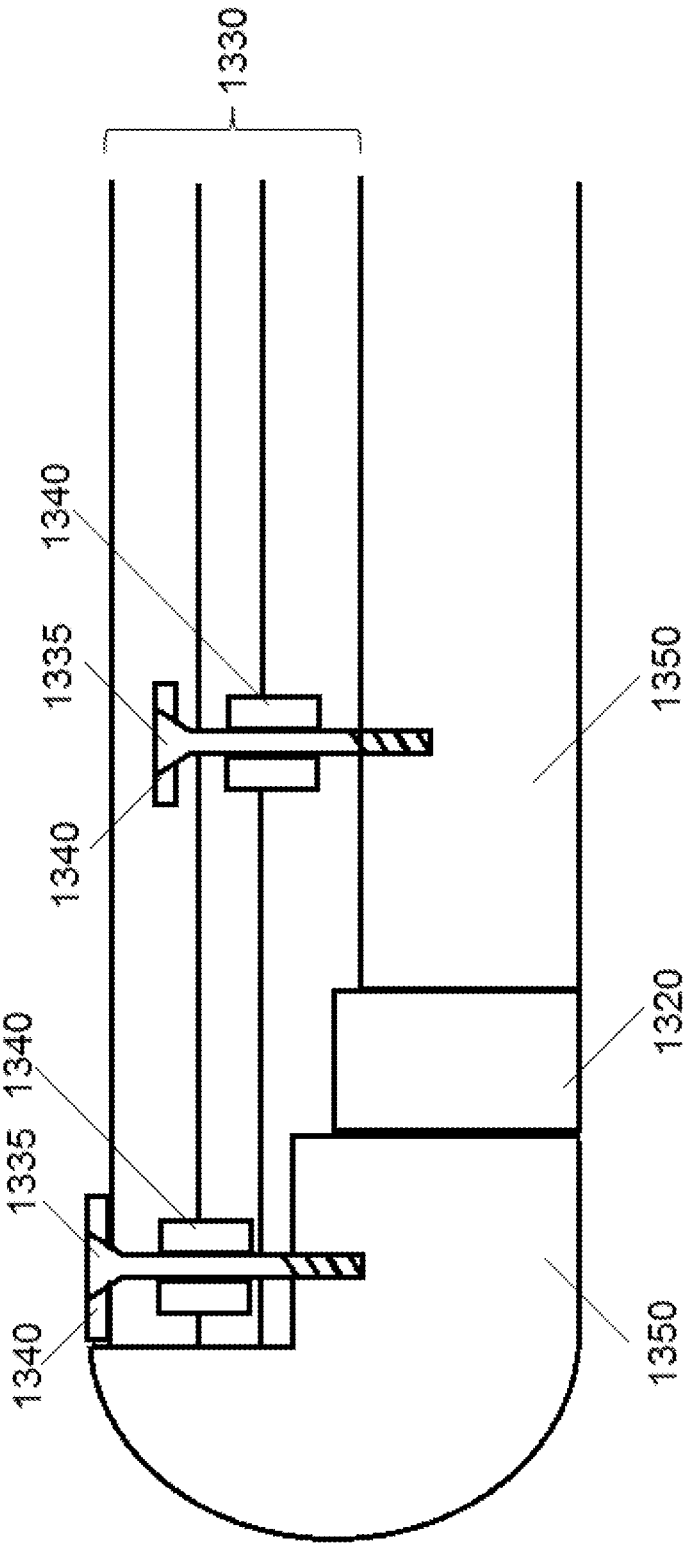

FIG. 31A

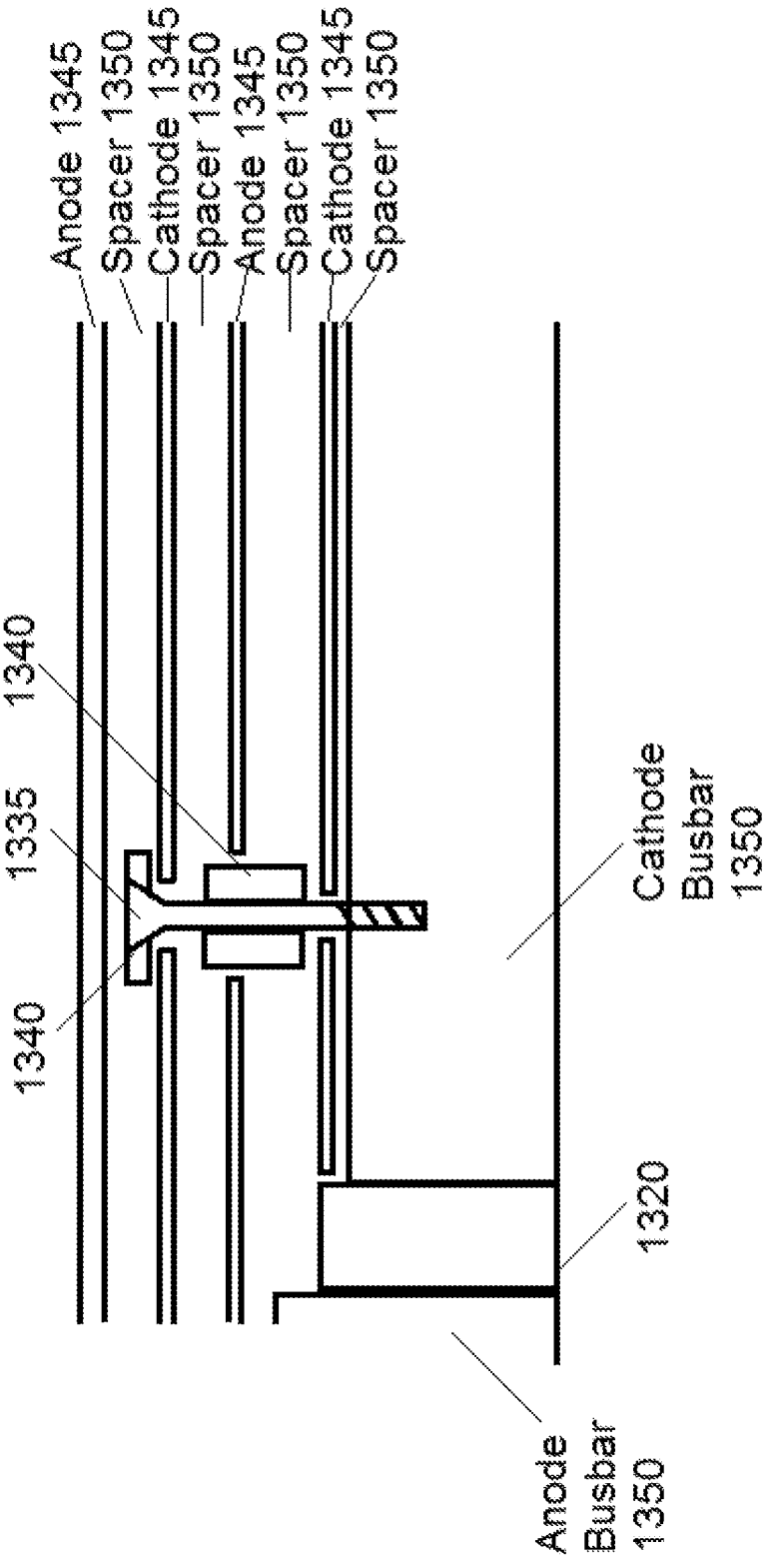
Anode 1345
Spacer 1350
Cathode 1345
Spacer 1350
Anode 1345
Spacer 1350
Cathode 1345
Spacer 1350
1340
1335
1340
Cathode Busbar 1350
1320
Anode Busbar 1350

FIG. 31B

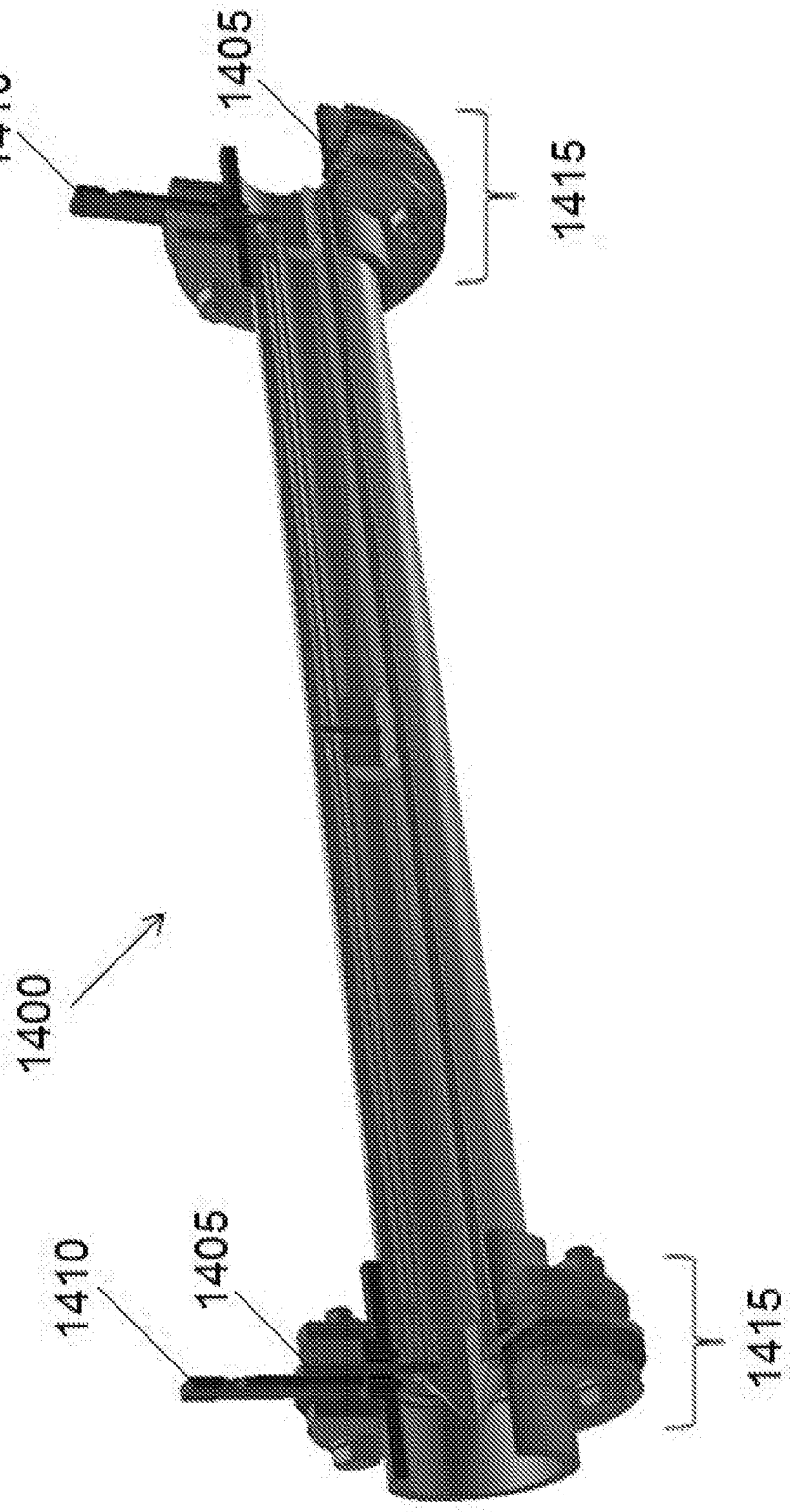

FIG. 32

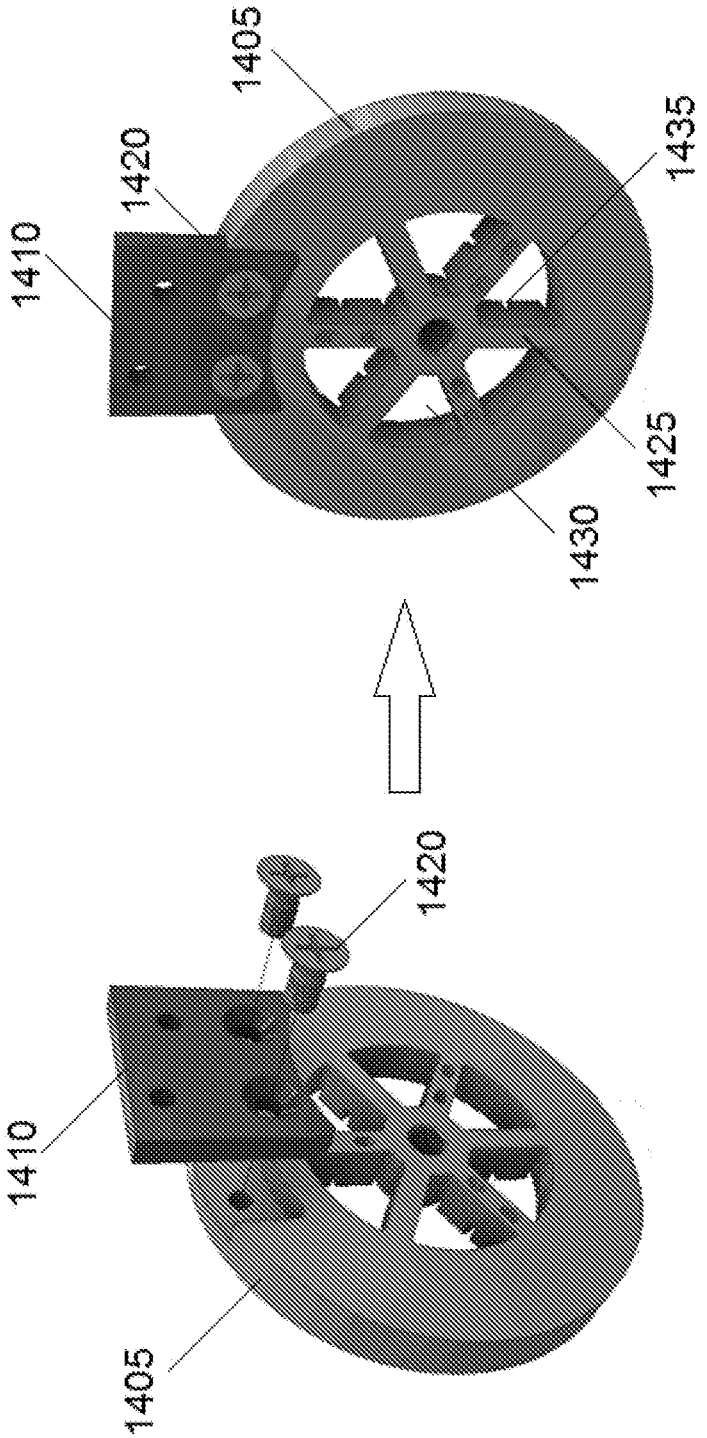

FIG. 33A

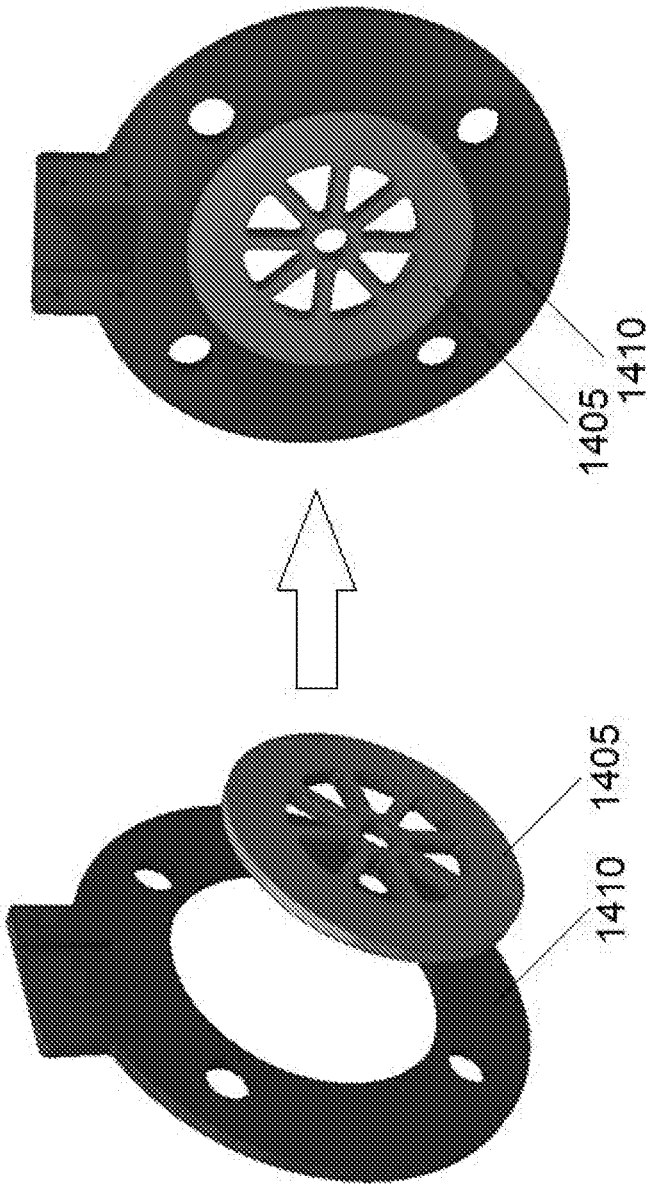

FIG. 33B

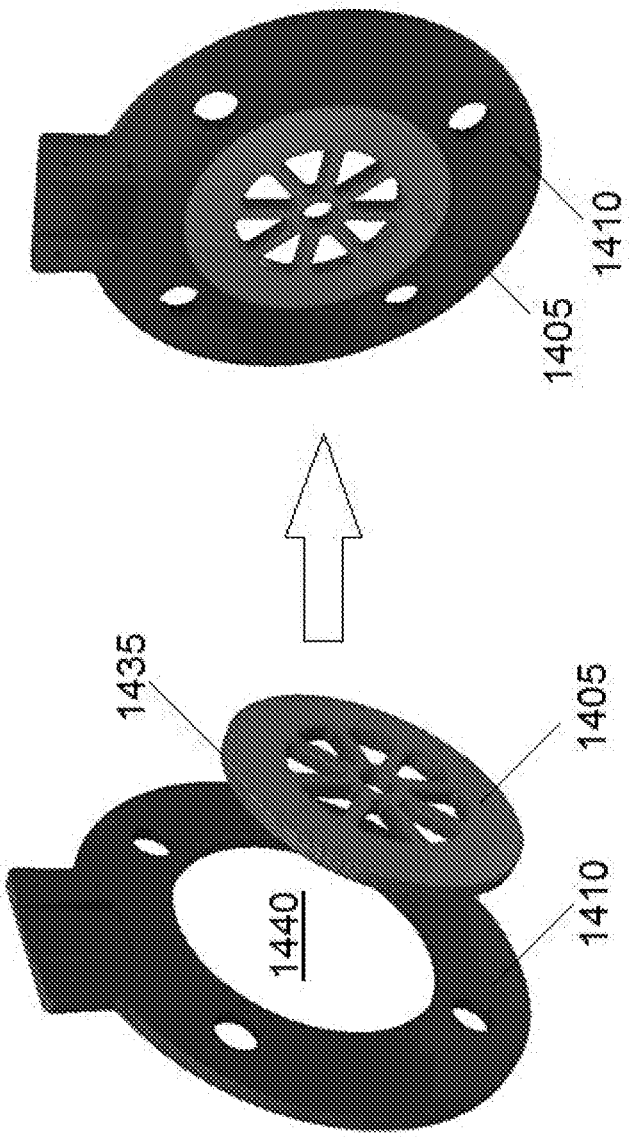

FIG. 33C

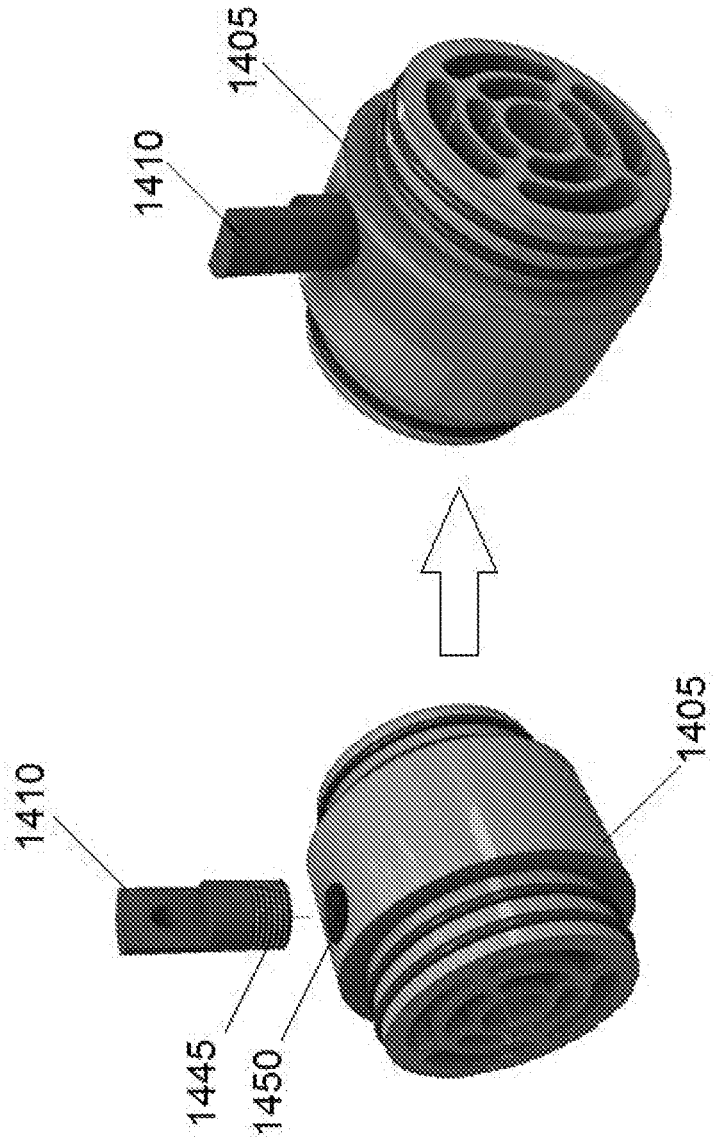

FIG. 33D

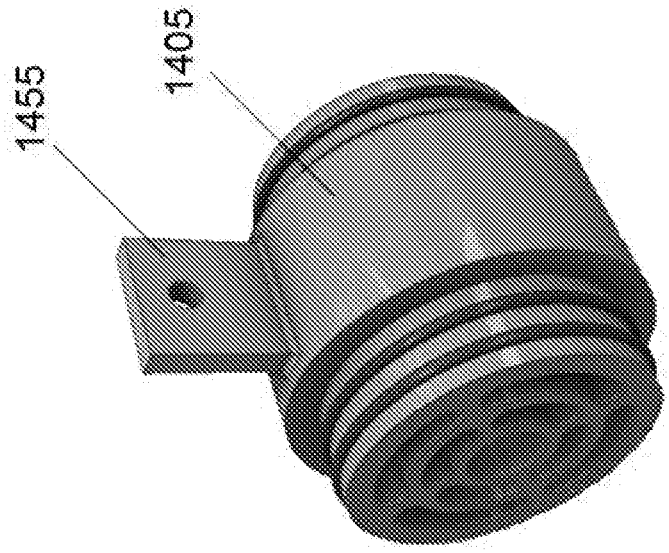

FIG. 33E

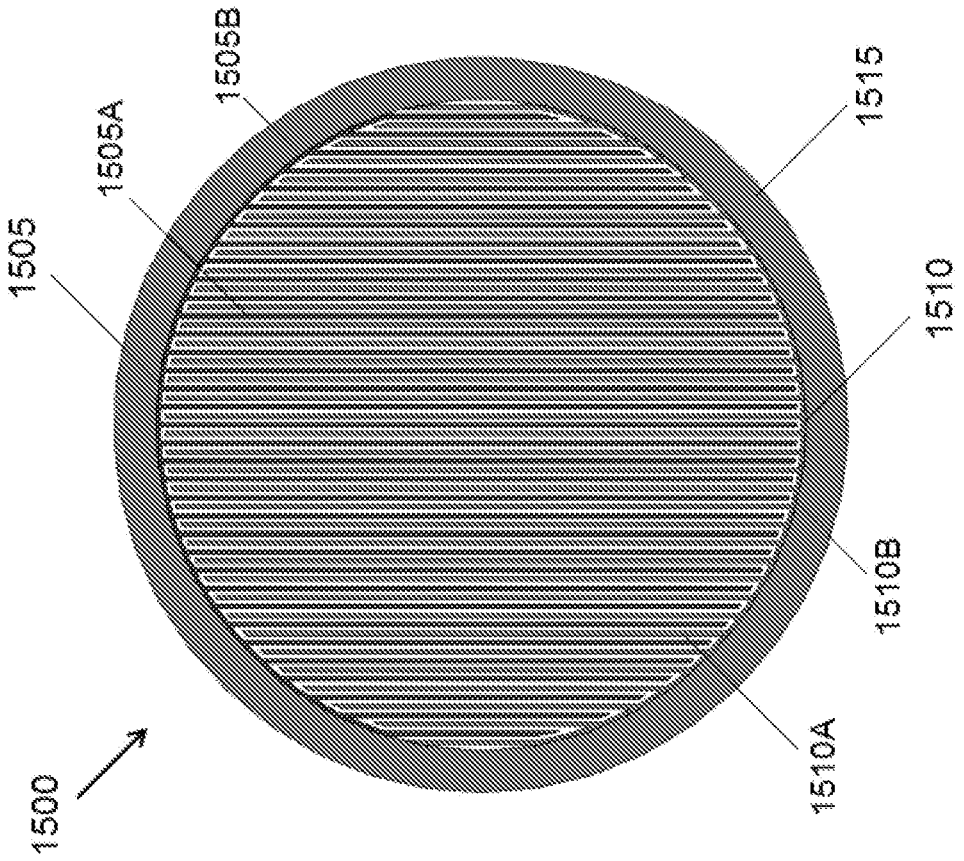

FIG. 34A

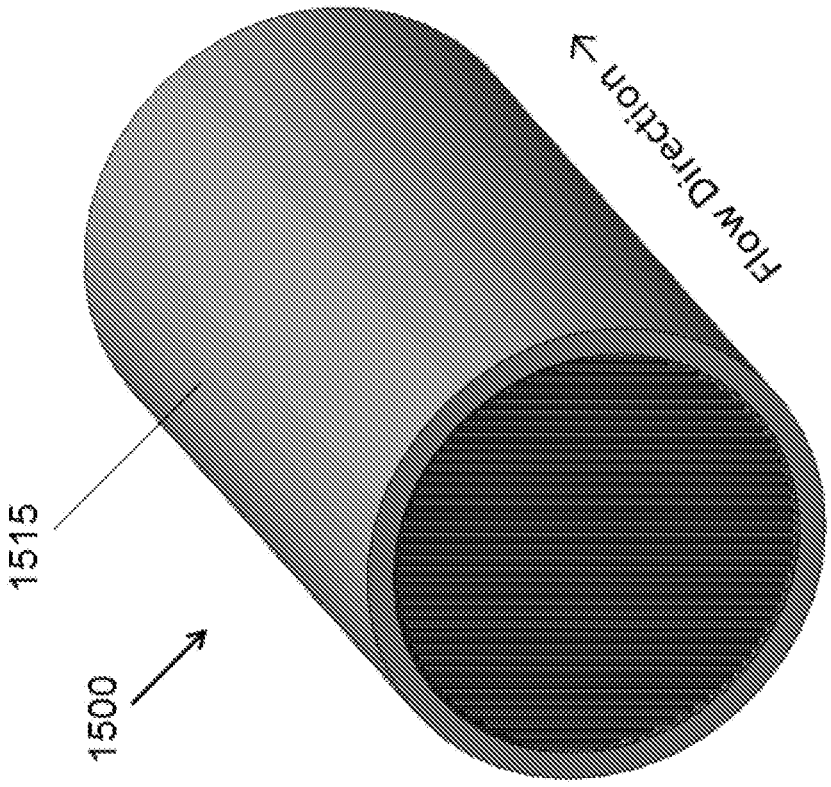

FIG. 34B

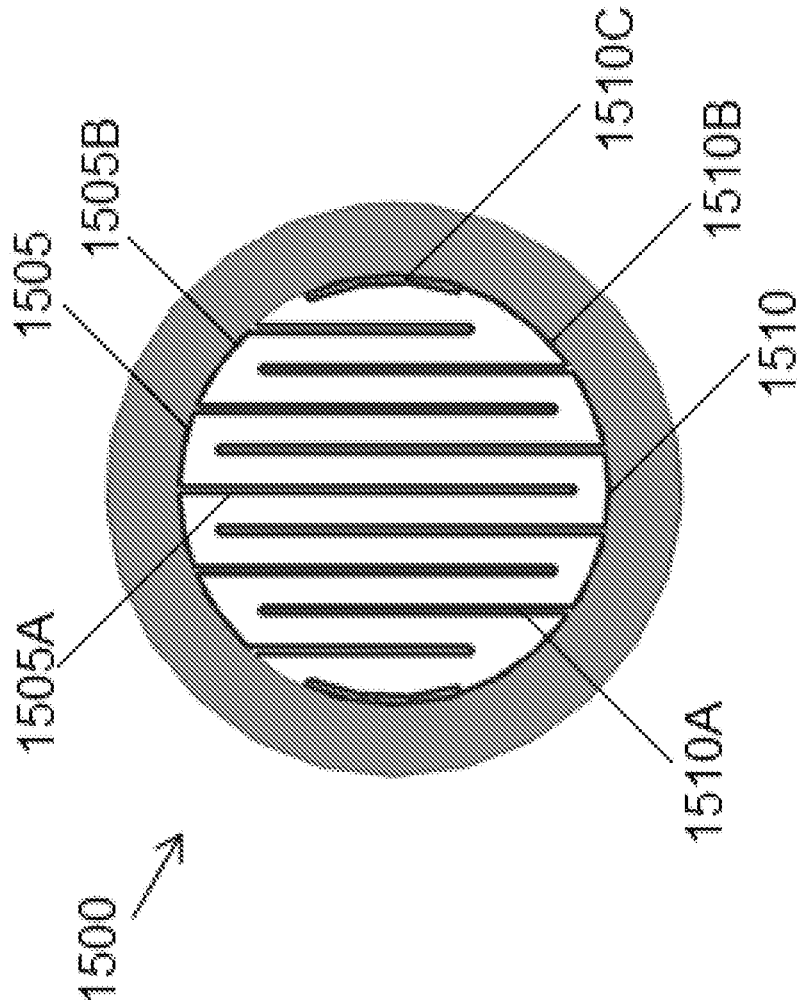

FIG. 34C

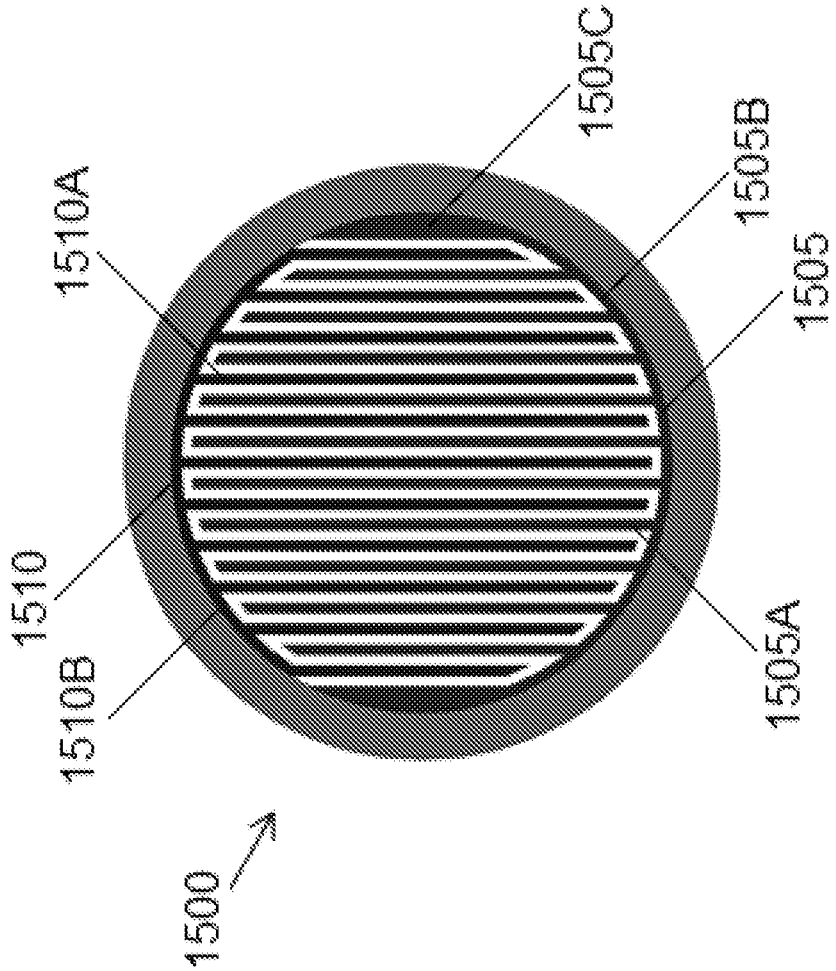

FIG. 34D

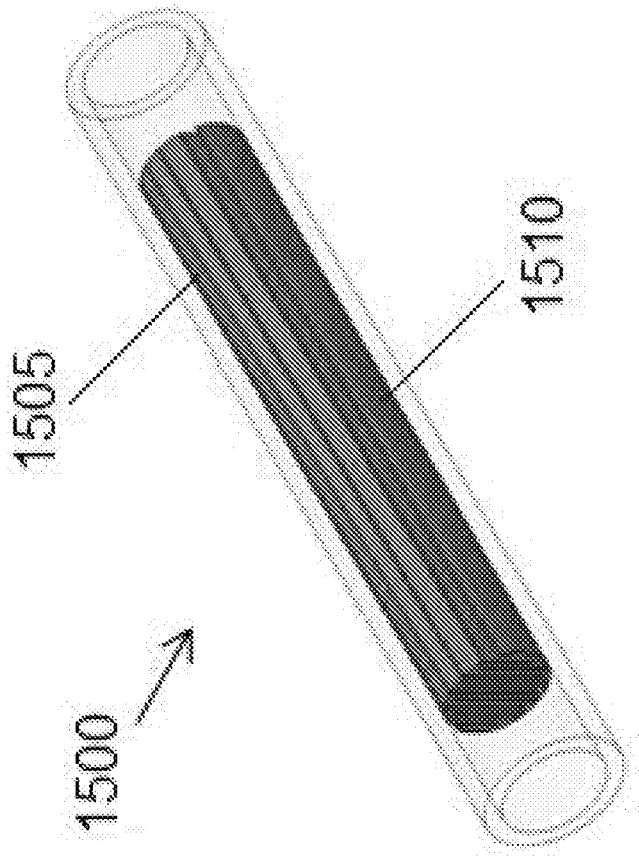

FIG. 34E

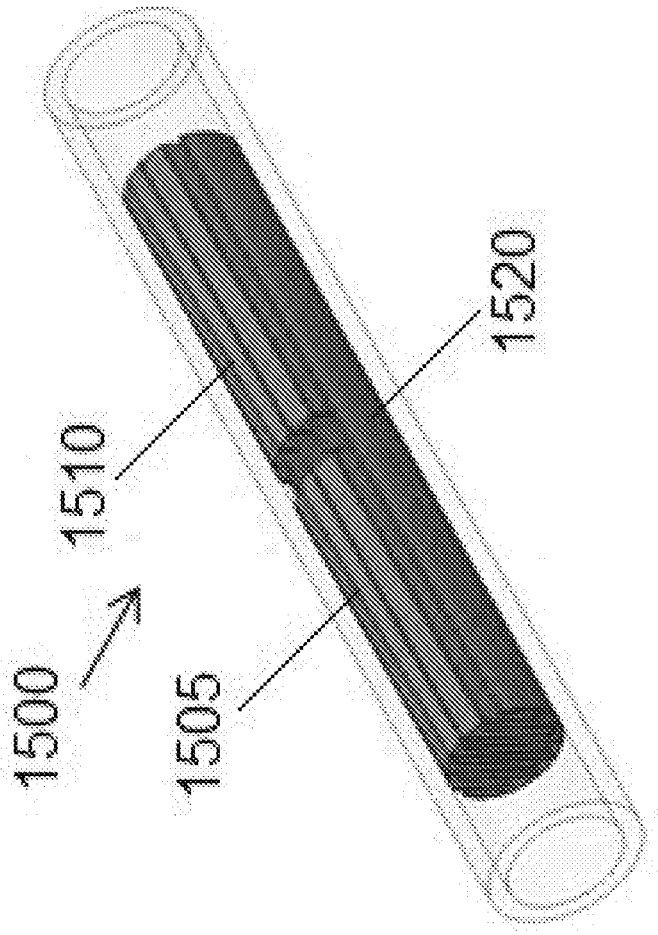

FIG. 34F

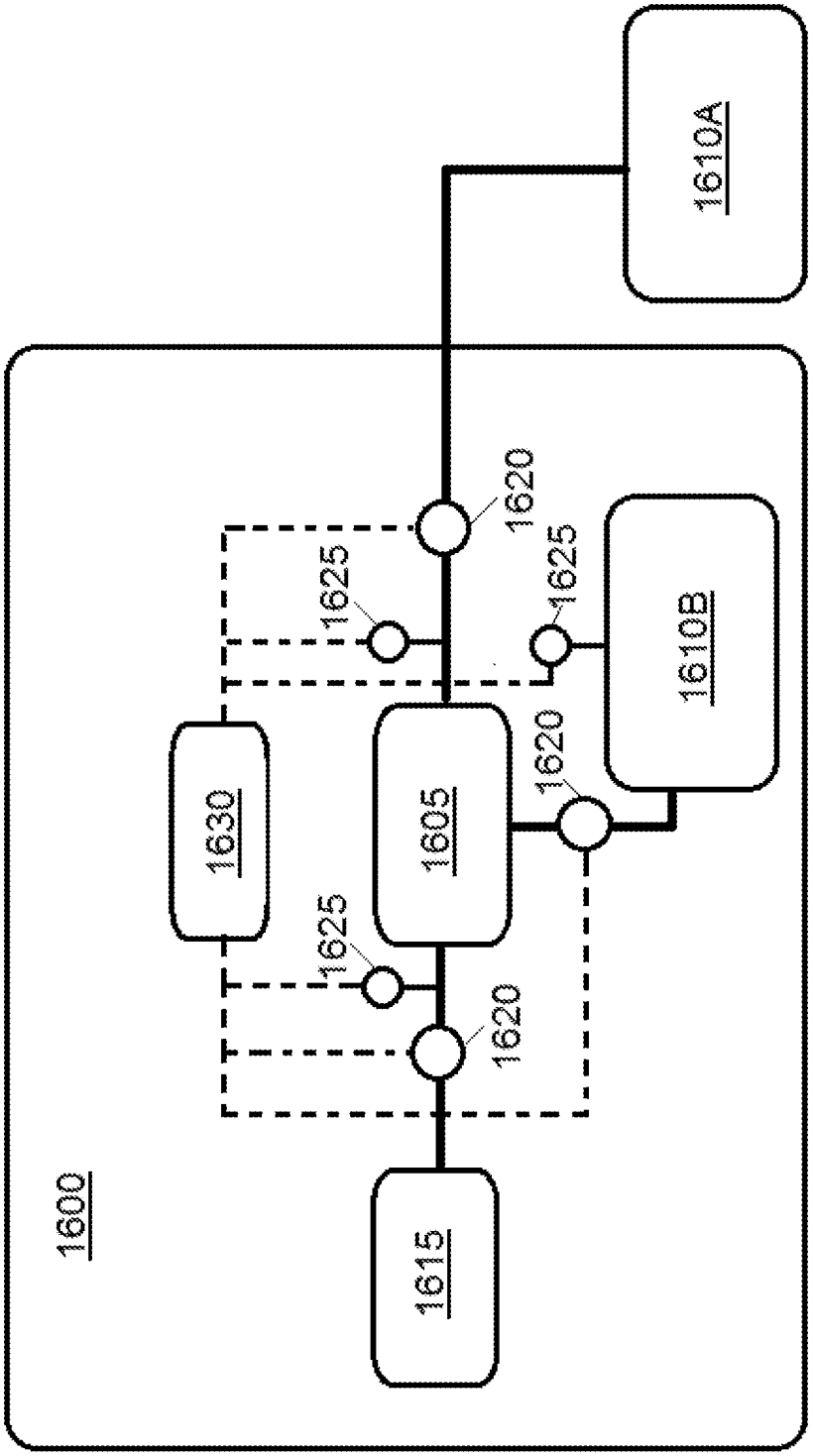
1610A
1620
1625
1625
1610B
1630
1605
1620
1625
1620
1600
1615

FIG. 35

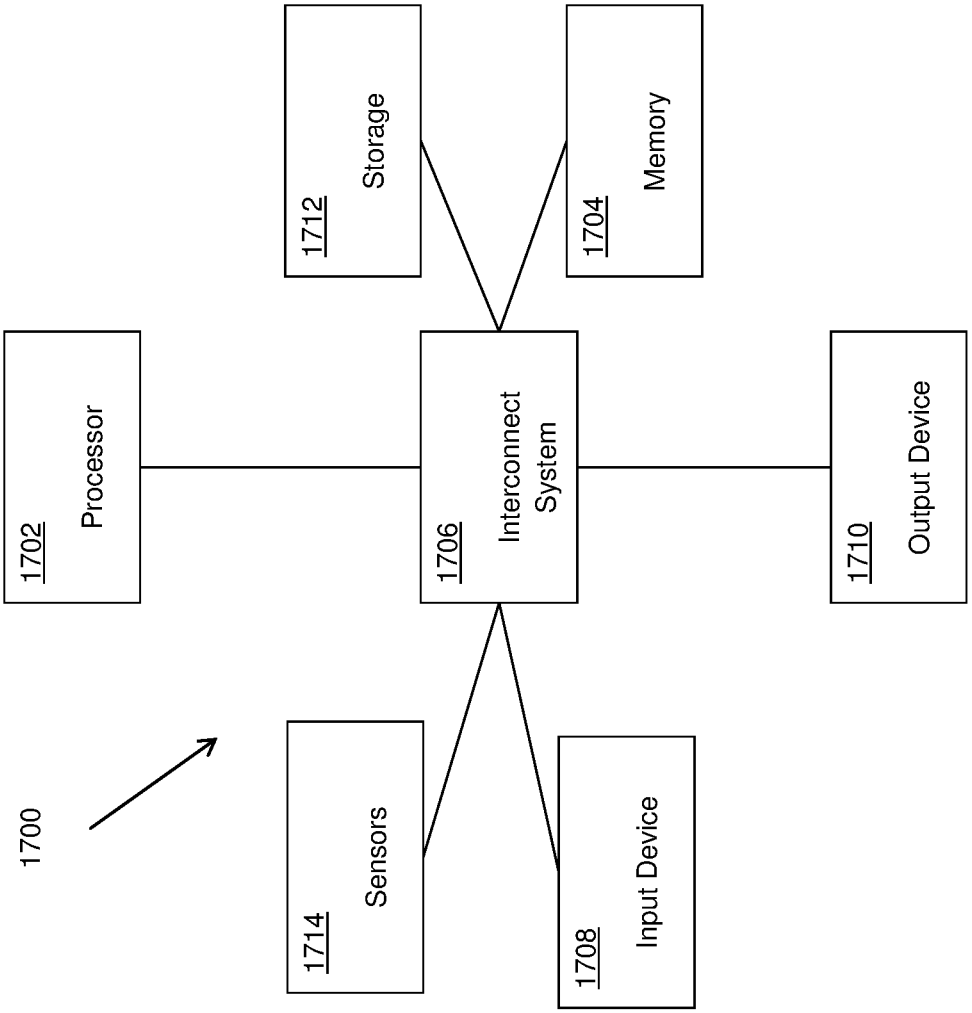
1700
1702 Processor
1706 Interconnect System
1712 Storage
1704 Memory
1710 Output Device
1714 Sensors
1708 Input Device

FIG. 36

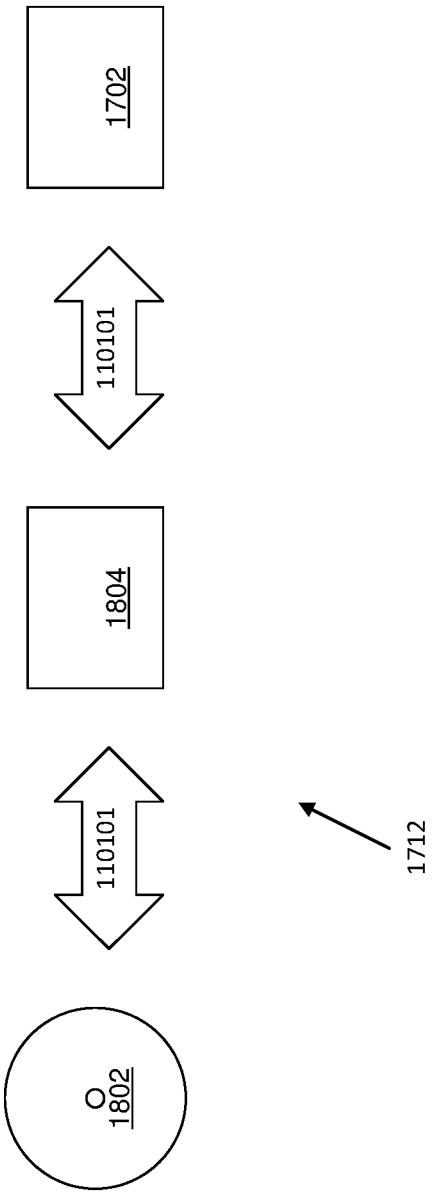

FIG. 37

Design	Type	Tube ID in.	Total Area mm^2	Core Area mm^2	Cathode Area mm^2	Anode Area mm^2	Flow Area mm^2	Available Flow %	Cathode Length mm	Anode Length mm	Electrode Ratio mm^-1
MK2M	Concentric	2.30	2687.5	2026.8	0.0	0.0	660.6	24.6%	181.6	159.6	0.127
3-TUBE-S	Concentric	1.54	1201.7	0.0	143.73	91.11	966.9	80.5%	191.6	191.6	0.319
3-TUBE-L	Concentric	2.72	3748.8	0.0	380.1	317.3	3051.4	81.4%	380.1	380.1	0.203
5-TUBE	Concentric	2.72	3748.8	0.0	475.95	381.7	2891.2	77.1%	634.6	634.6	0.339
7-TUBE	Concentric	2.72	3748.8	0.0	572.6	431.2	2745.1	73.2%	763.4	763.4	0.407
2" ID	Axial	1.91	1854.3	506.7	195.0	195.0	957.6	51.6%	927.5	927.5	1.000
4" ID	Axial	3.79	7263.0	506.7	588.3	588.3	5579.7	76.8%	2995.3	2995.3	0.825
8" ID	Axial	7.57	28998.5	506.7	1892.0	1892.0	24707.8	85.2%	10405.2	10405.2	0.718
12" ID	Axial	11.29	64632.8	506.7	4080.2	4080.2	55965.6	86.6%	21834.6	21834.6	0.676
1" ID	Spiral	0.96	464.1	111.2	37.5	37.5	277.9	59.9%	301.1	301.1	1.298
2" ID	Spiral	1.91	1854.3	506.7	146.6	146.6	1054.4	56.9%	586.0	586.0	0.632
4" ID	Spiral	3.79	7263.0	506.7	699.9	699.9	5356.5	73.7%	2739.3	2739.3	0.754
8" ID	Spiral	7.57	28998.5	506.7	2836.0	2836.0	22819.7	78.7%	11155.8	11155.8	0.769
12" ID	Spiral	11.29	64632.8	506.7	6364.7	6364.7	51396.7	79.5%	25196.5	25196.5	0.780
.5" ID	Corrugated	0.53	140.2	0.0	18.4	14.4	107.4	76.6%	119.4	93.3	1.517
1"	Corrugated	0.94	443.9	0.0	74.9	60.1	308.9	69.6%	388.3	361.8	1.690
1.25" ID	Corrugated	1.26	798.1	0.0	110.0	96.6	591.5	74.1%	575.9	508.5	1.359
2" ID	Corrugated	1.91	1854.3	0.0	213.28	218.1	1423.0	76.7%	1119.9	1091.3	1.192
4" ID	Corrugated	3.79	7263.0	0.0	2047.79	1798.67	3416.6	47.0%	3438.4	3419.2	0.944
12"	Corrugated	11.29	64632.8	0.0	16401.7	16229.2	32002.0	49.5%	32044.9	31765.4	0.987

FIG. 38