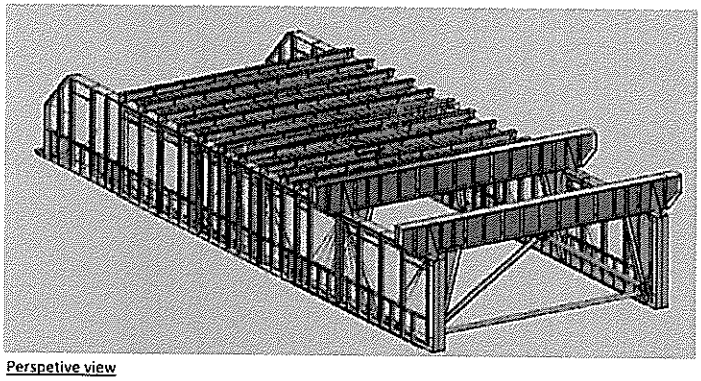

Perspetive view

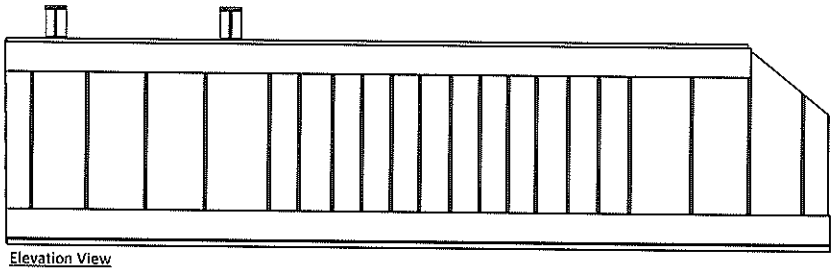

Elevation View

Figure 1a - typical conventional cantilever

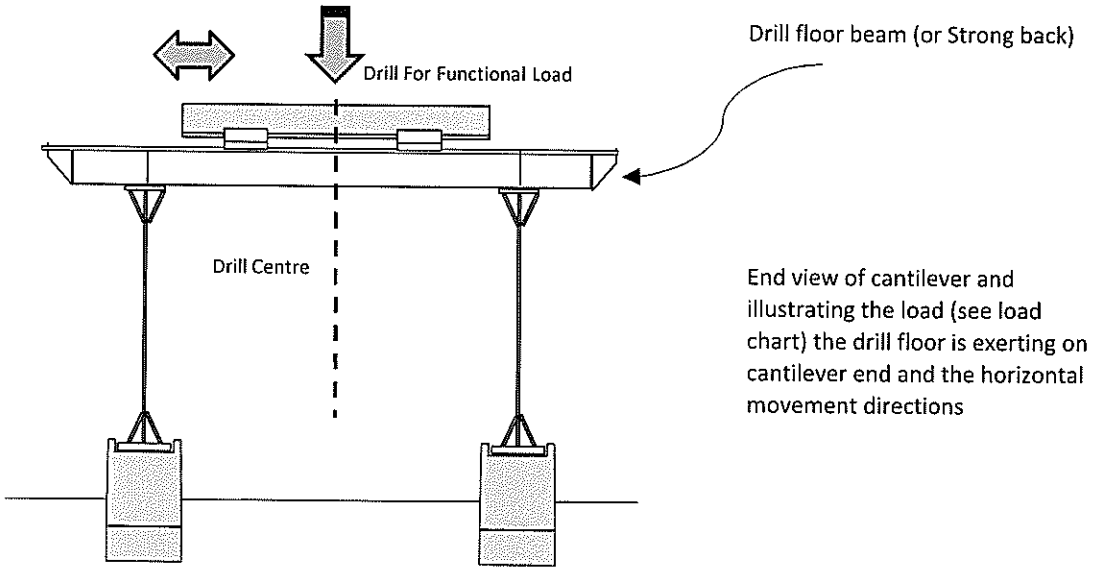

Cantilever extended

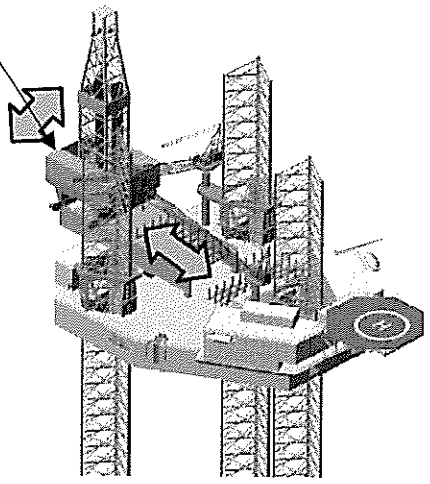

Outreach		Transverse travel				
		Centre	1.5m	3.0m	4.5m	5.5m
(ft)	(m)	(mt)				
25	7.62	1200	1200	1100	950	850
30	9.14	1200	1200	1060	880	760
35	10.67	1200	1150	980	800	670
40	12.19	1200	1100	900	720	580
45	13.72	1200	1020	810	640	510
50	15.24	1100	900	720	560	440
55	16.76	1020	860	660	480	380
60	18.29	940	780	600	430	320
65	19.81	870	710	560	380	270
70	21.34	780	650	510	330	230
75	22.86	700	530	380	250	180

Figure 1b - typical conventional cantilever loading chart

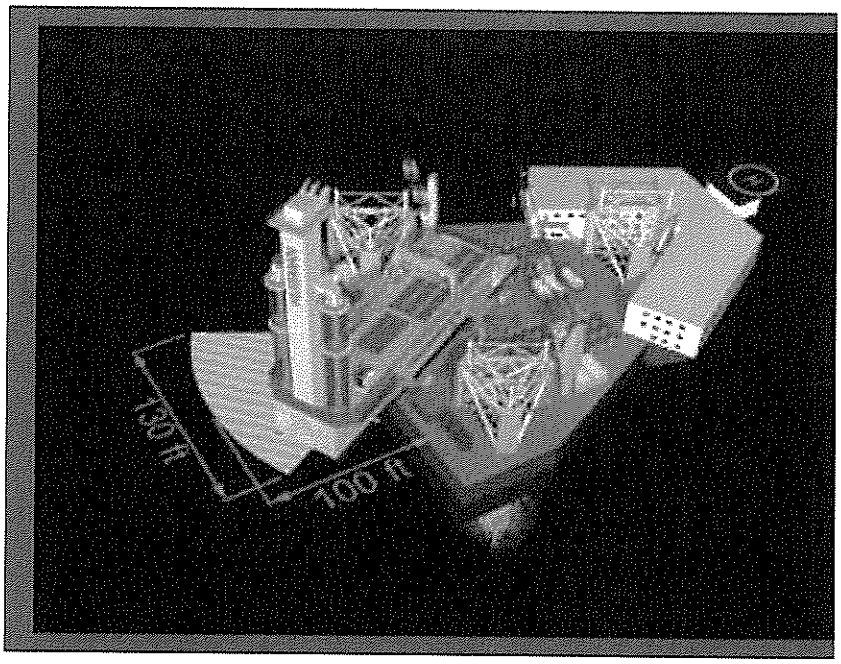

Figure 2a - Rotating cantilever - drill floor is fixed on cantilever

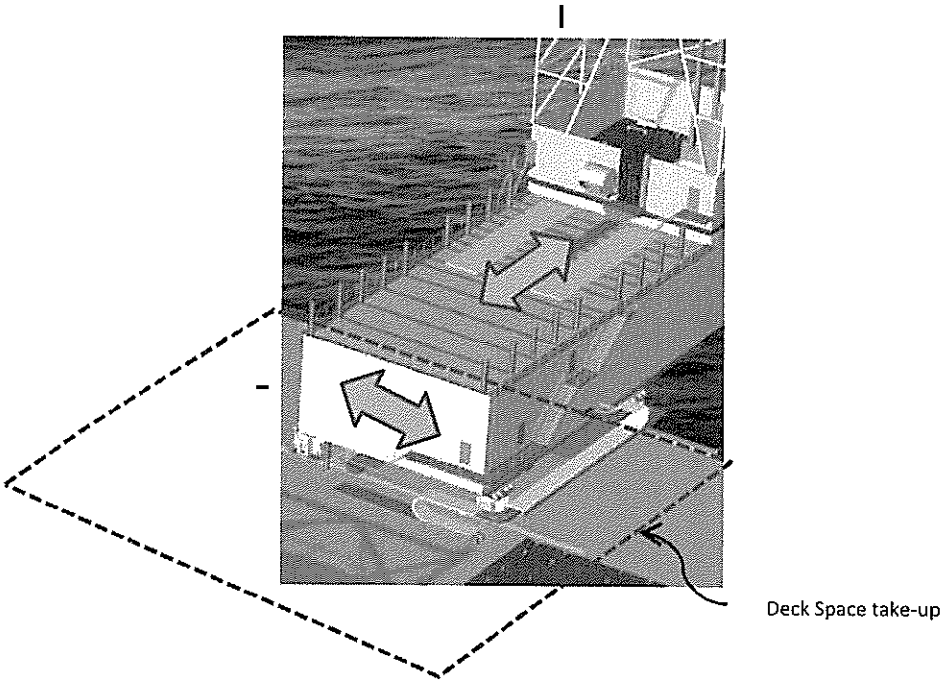

Figure 2b - " X-Y" cantilever - drill floor is fixed on cantilever

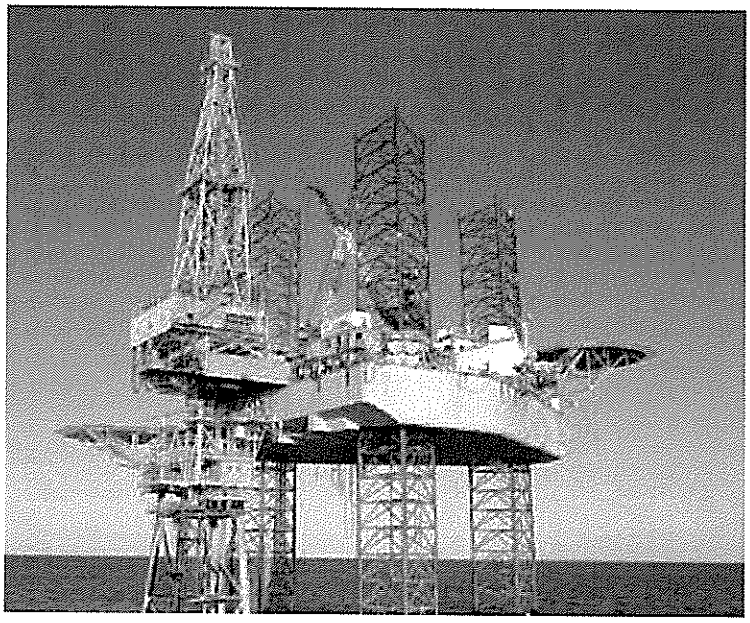

Figure 2C - Jack Up Rig with conventional cantilever

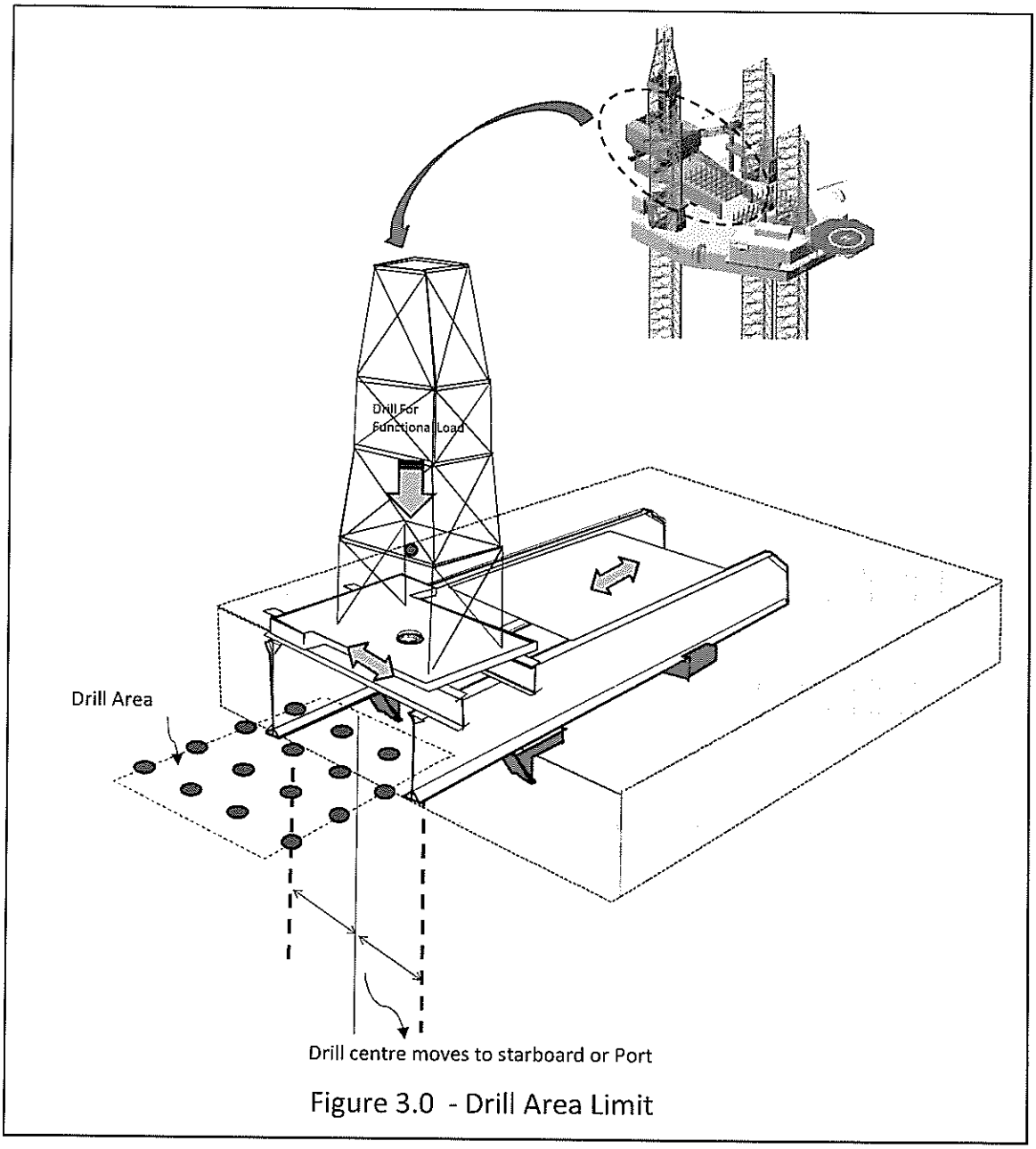

Figure 3.0 - Drill Area Limit

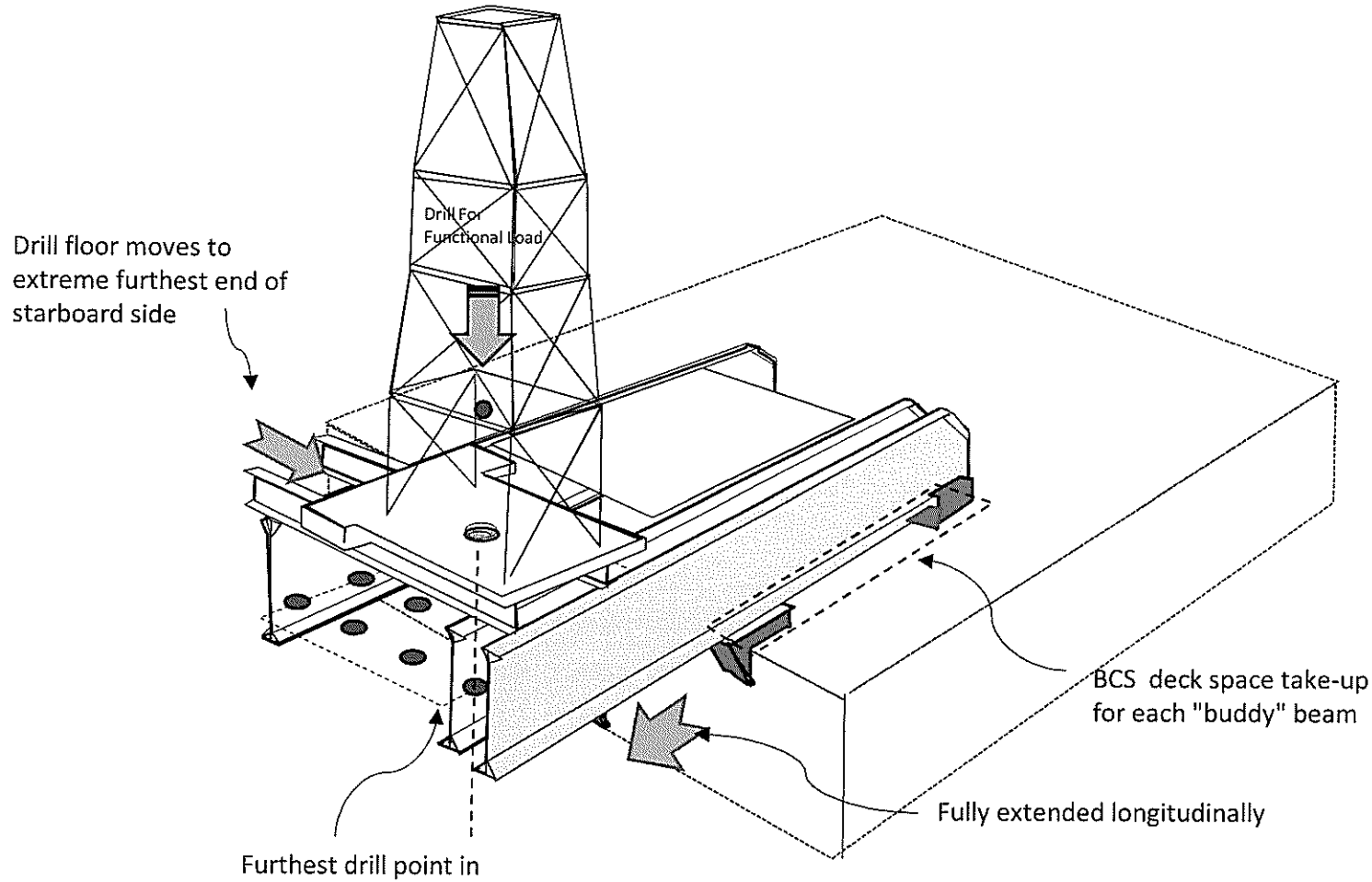

Figure 4a - Buddy Cantilever System

("Buddy" installed to act as double-beam to
the starboard side of conventional cantilever)

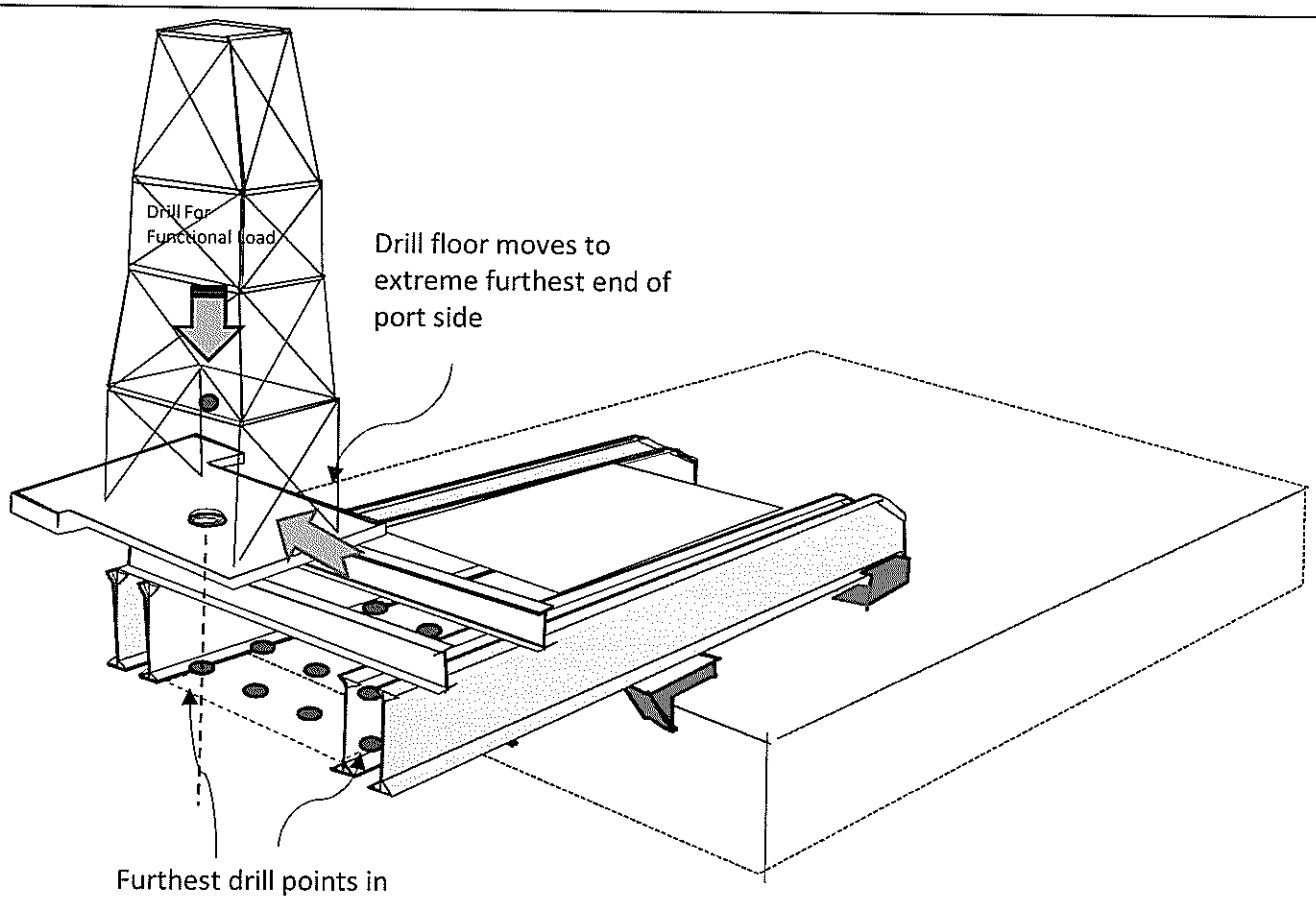

Figure 4b - Buddy Cantilever System

("Buddy" installed to act as double-beam to
the port and starboard sides of conventional cantilever)

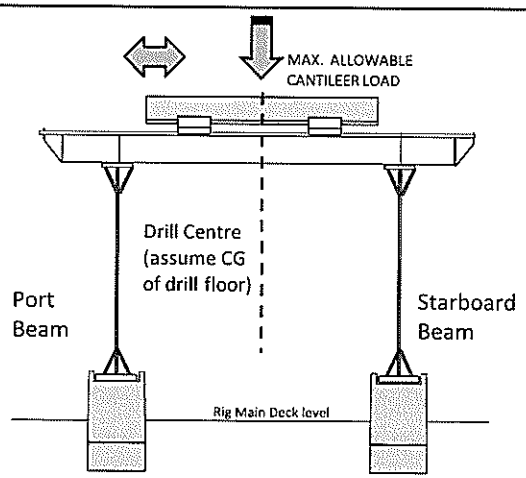

Drill floor centre moves along rig centre

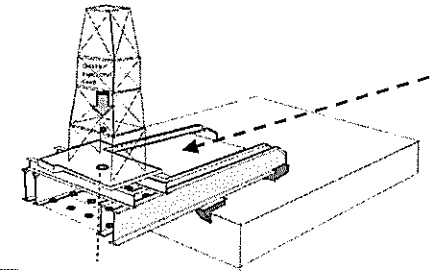

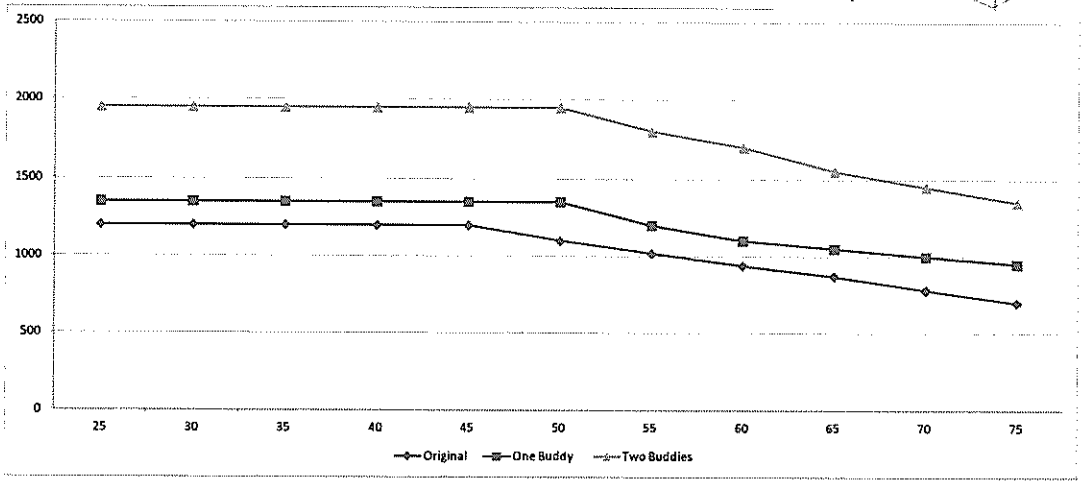

CANTILEVER TOTAL LOAD CAPACITY CHART

Drill Centre on rig longitudinal centre line moving out from rig transom

	25	30	35	40	45	50	55	60	65	70	75
Original	1200	1200	1200	1200	1200	1100	1020	940	870	780	700
One Buddy	1350	1350	1350	1350	1350	1350	1200	1100	1050	1000	950
Two Buddies	1950	1950	1950	1950	1950	1950	1800	1700	1550	1450	1350

Figure 5a - Buddy Cantilever System Loading Improvement (estimated) - Drill floor centre moves along rig centre

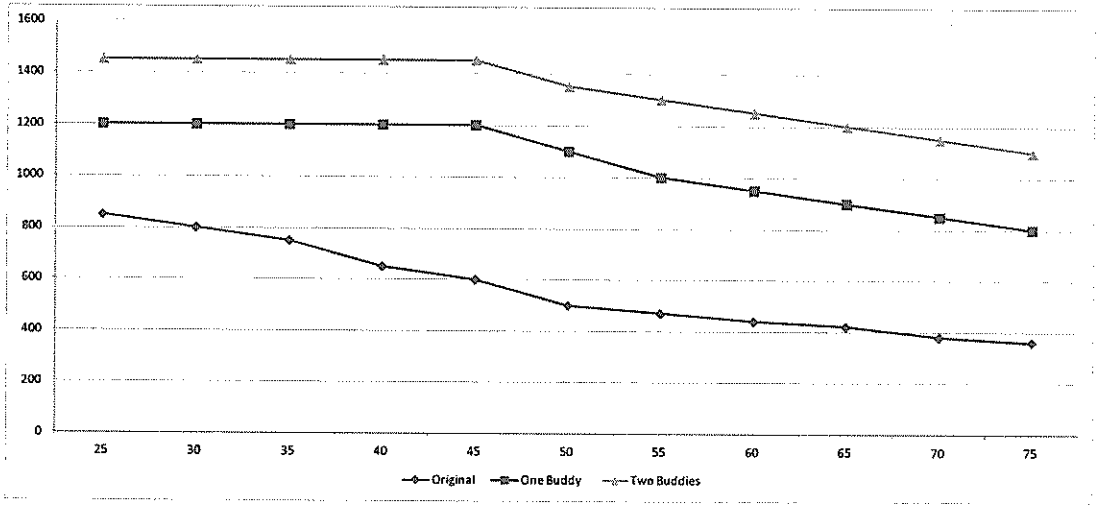

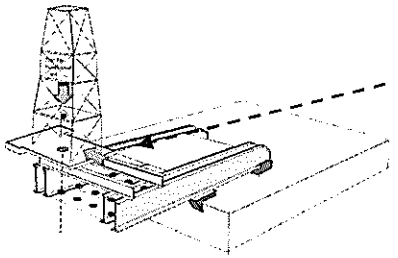

CANTILEVER TOTAL LOAD CAPACITY CHART

Drill Centre in drill envelop Port or Starboard extreme longitudinal line moving out from rig transon

	25	30	35	40	45	50	55	60	65	70	75
Original	850	800	750	650	600	500	470	440	420	380	360
One Buddy	1200	1200	1200	1200	1200	1100	1000	950	900	850	800
Two Buddies	1450	1450	1450	1450	1450	1350	1300	1250	1200	1150	1100

Figure 5b - Buddy Cantilever System Loading Improvement (estimated)

(Drill floor centre extreme port when cantilever skids out)

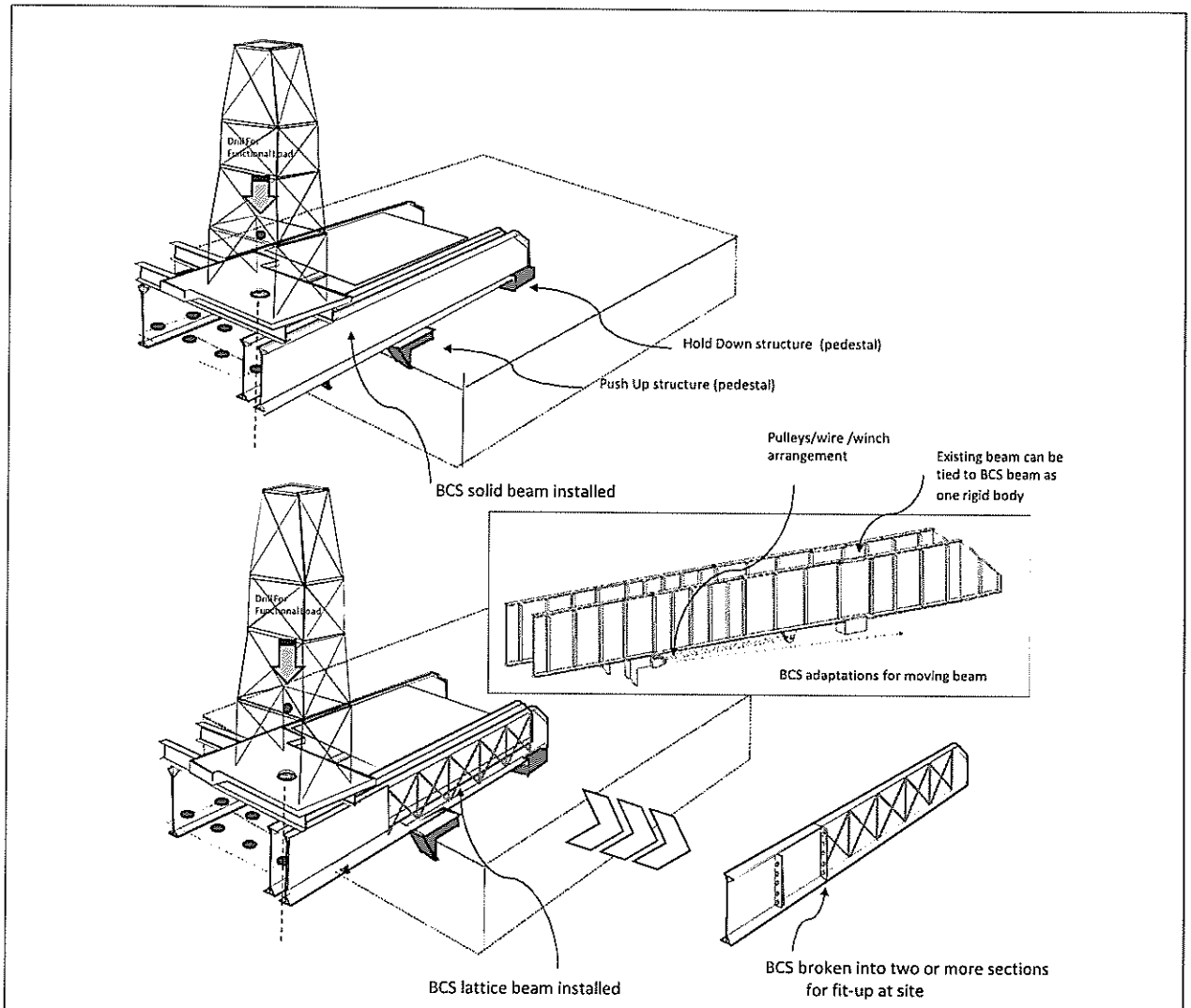

Figure 6.0 - Variations of BCS beam design under one concept

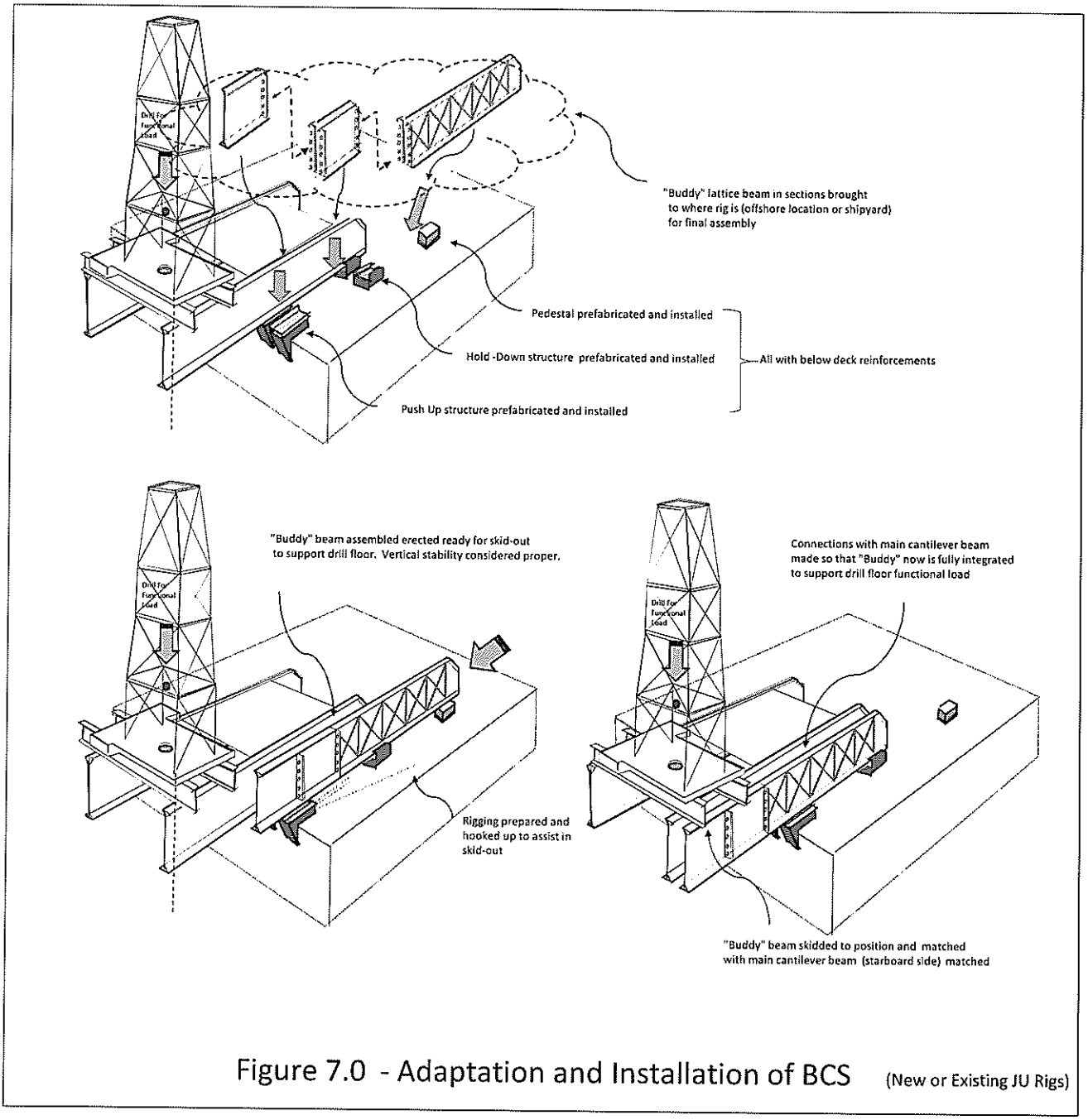

Figure 7.0 - Adaptation and Installation of BCS (New or Existing JU Rigs)

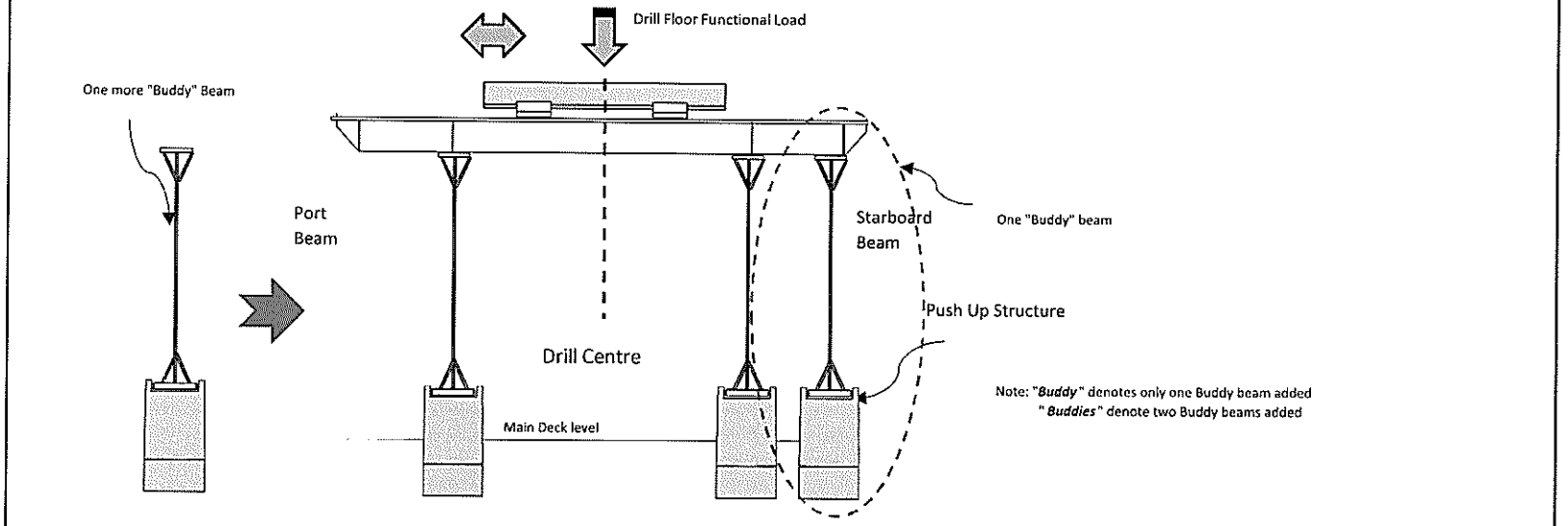

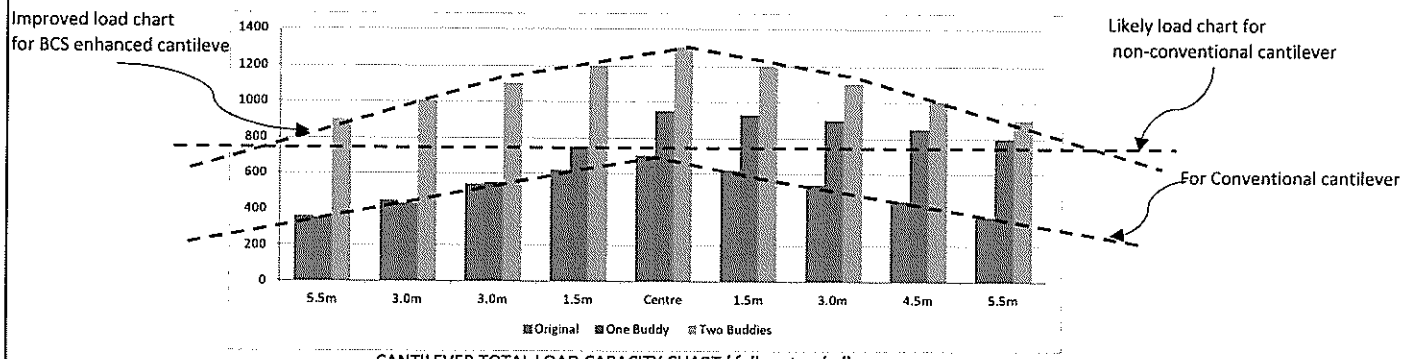

CANTILEVER TOTAL LOAD CAPACITY CHART (*fully extended*)

Drill Centre travelling transversely when cantilever is fully extended out from rig transom

	5.5m	3.0m	3.0m	1.5m	Centre	1.5m	3.0m	4.5m	5.5m
Original	360	450	540	620	700	620	540	450	360
One Buddy	350	430	550	750	950	930	900	850	800
Two Buddies	900	1000	1100	1200	1300	1200	1100	1000	900

(Port) (Starboard)

Figure 8.0 - Cantilever Load Chart at Max. Outreach (estimated)

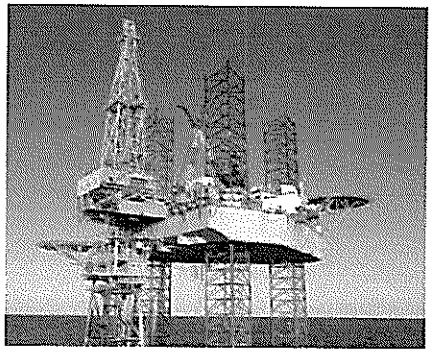

Cantilever working over a platform

Cantilever working over a platform
(Buddy system applied to enhance cantilever)

Hold Down Structure

Push Up structure

Air Gap

Cantilever outreach

Increased in air gap

Cantilever working over a platform with
aux. frame to enhance cantilever

Overhang starts here not at transom
(cantilever not enhanced structurally)

Hold Down Structure

Push Up structure
with aux. frame

Air Gap

Cantilever outreach

Figure 9.0 Cantilever in work-over mode

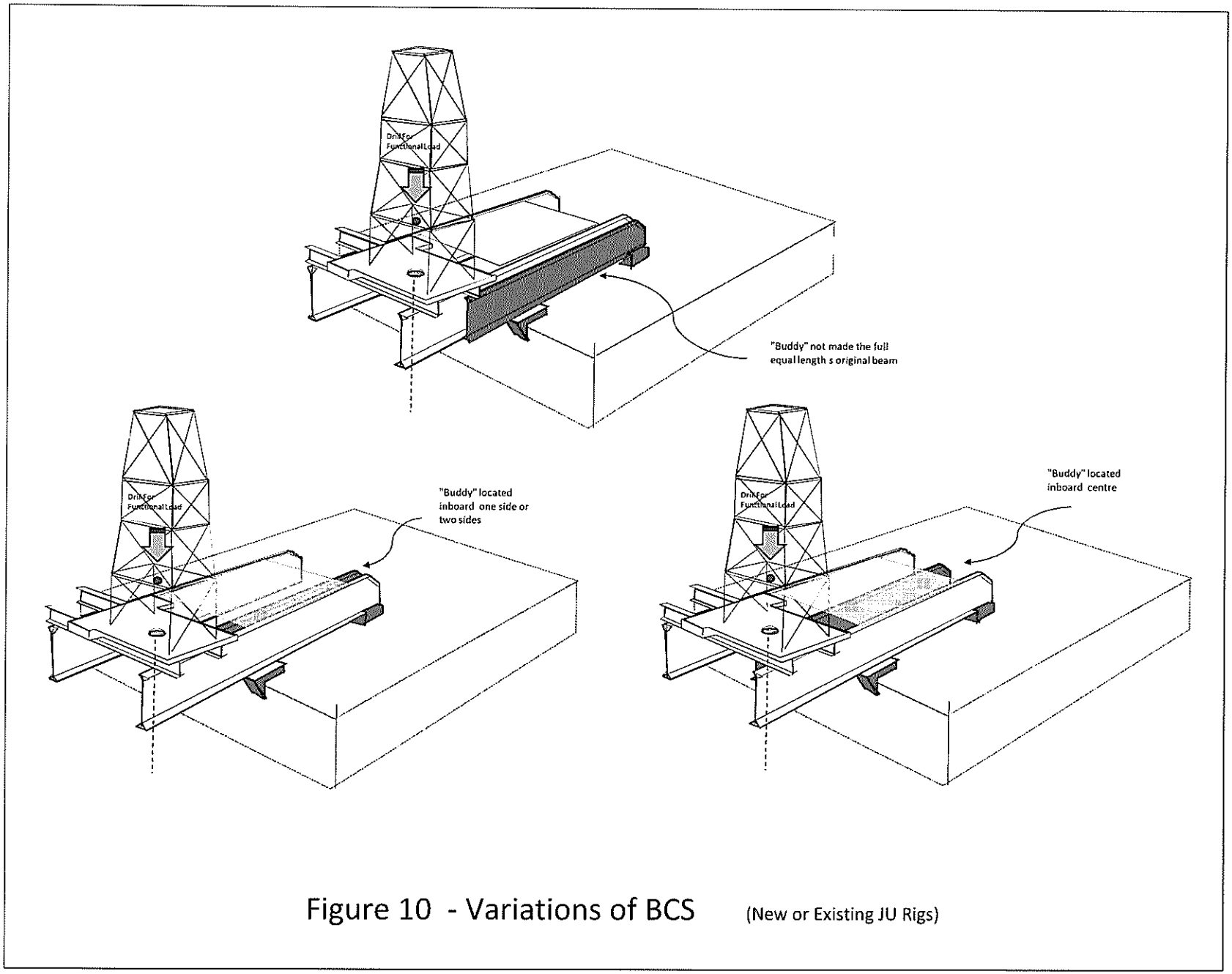

Figure 10 - Variations of BCS (New or Existing JU Rigs)