(12) INTERNATIONAL APPLICATION PUBLISHED UNDER THE PATENT COOPERATION TREATY (PCT)

(19) World Intellectual Property Organization
International Bureau

(43) International Publication Date
10 January 2008 (10.01.2008)

PCT

(10) International Publication Number
WO 2008/003981 A1

(51) International Patent Classification:
G06F 1/20 (2006.01)

(21) International Application Number:
PCT/GB2007/002534

(22) International Filing Date: 6 July 2007 (06.07.2007)

(25) Filing Language: English

(26) Publication Language: English

(30) Priority Data:
0613581.8 7 July 2006 (07.07.2006) GB

(71) Applicant *(for all designated States except US)*: **TROX AITCS LIMITED** [GB/GB]; Caxton Way, Thetford, Norfolk IP24 3SQ (GB).

(72) Inventors; and
(75) Inventors/Applicants *(for US only)*: **LEATHERBARROW, David** [GB/GB]; Pond House, Redgrave Diss, Suffolk IP22 1RW (GB). **HUTCHINS, Guy** [GB/GB]; 35 Radnor Close, Bury St Edmunds, Suffolk IP32 7JL (GB).

(74) Agents: **MURRAY, Elisabeth, Anne** et al.; Mathys & Squire, 120 Holborn, London EC1N 2SQ (GB).

(81) Designated States *(unless otherwise indicated, for every kind of national protection available)*: AE, AG, AL, AM, AT, AU, AZ, BA, BB, BG, BH, BR, BW, BY, BZ, CA, CH, CN, CO, CR, CU, CZ, DE, DK, DM, DO, DZ, EC, EE, EG, ES, FI, GB, GD, GE, GH, GM, GT, HN, HR, HU, ID, IL, IN, IS, JP, KE, KG, KM, KN, KP, KR, KZ, LA, LC, LK, LR, LS, LT, LU, LY, MA, MD, MG, MK, MN, MW, MX, MY, MZ, NA, NG, NI, NO, NZ, OM, PG, PH, PL, PT, RO, RS, RU, SC, SD, SE, SG, SK, SL, SM, SV, SY, TJ, TM, TN, TR, TT, TZ, UA, UG, US, UZ, VC, VN, ZA, ZM, ZW.

(84) Designated States *(unless otherwise indicated, for every kind of regional protection available)*: ARIPO (BW, GH, GM, KE, LS, MW, MZ, NA, SD, SL, SZ, TZ, UG, ZM, ZW), Eurasian (AM, AZ, BY, KG, KZ, MD, RU, TJ, TM), European (AT, BE, BG, CH, CY, CZ, DE, DK, EE, ES, FI, FR, GB, GR, HU, IE, IS, IT, LT, LU, LV, MC, MT, NL, PL, PT, RO, SE, SI, SK, TR), OAPI (BF, BJ, CF, CG, CI, CM, GA, GN, GQ, GW, ML, MR, NE, SN, TD, TG).

Published:
— *with international search report*
— *before the expiration of the time limit for amending the claims and to be republished in the event of receipt of amendments*

For two-letter codes and other abbreviations, refer to the "Guidance Notes on Codes and Abbreviations" appearing at the beginning of each regular issue of the PCT Gazette.

(54) Title: COOLING APPARATUS AND METHODS FOR COOLING

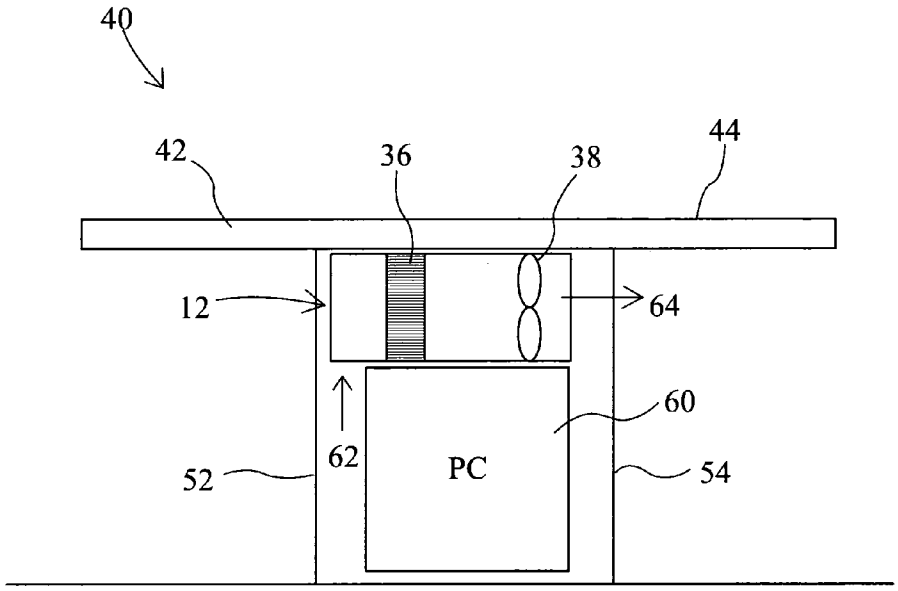

(57) Abstract: A workstation cooling unit (12), comprises a heat transfer path adapted to contain a heat transfer fluid, the heat transfer path being adapted for connection to a condenser to form a heat transfer circuit, and a heat exchanger (36) for cooling the workstation (40). In this way, direct cooling of a workstation (40), for example a desk or other work area, can be achieved. The heat transfer fluid may comprise carbon dioxide.

WO 2008/003981 A1