(12) INTERNATIONAL APPLICATION PUBLISHED UNDER THE PATENT COOPERATION TREATY (PCT)

(19) World Intellectual Property Organization
International Bureau

(43) International Publication Date
22 September 2005 (22.09.2005)

PCT

(10) International Publication Number
WO 2005/087324 A1

(51) International Patent Classification[7]: A63B 5/20

(21) International Application Number:
PCT/GB2005/000952

(22) International Filing Date: 11 March 2005 (11.03.2005)

(25) Filing Language: English

(26) Publication Language: English

(30) Priority Data:
0405459.9 11 March 2004 (11.03.2004) GB

(71) Applicant and
(72) Inventor: **O'SHEA, Clayton** [GB/GB]; 3 Whicher Place, London NW1 9JB (GB).

(72) Inventor; and
(75) Inventor/Applicant *(for US only)*: **ST. GEORGE, David** [GB/GB]; 32 Davies Street, London W1K 4ND (GB).

(74) Agent: **GALLAFENT & CO**; 9 Staple Inn, London WC1V 7QH (GB).

(81) Designated States *(unless otherwise indicated, for every kind of national protection available)*: AE, AG, AL, AM, AT, AU, AZ, BA, BB, BG, BR, BW, BY, BZ, CA, CH, CN, CO, CR, CU, CZ, DE, DK, DM, DZ, EC, EE, EG, ES, FI, GB, GD, GE, GH, GM, HR, HU, ID, IL, IN, IS, JP, KE, KG, KP, KR, KZ, LC, LK, LR, LS, LT, LU, LV, MA, MD, MG, MK, MN, MW, MX, MZ, NA, NI, NO, NZ, OM, PG, PH, PL, PT, RO, RU, SC, SD, SE, SG, SK, SL, SM, SY, TJ, TM, TN, TR, TT, TZ, UA, UG, US, UZ, VC, VN, YU, ZA, ZM, ZW.

(84) Designated States *(unless otherwise indicated, for every kind of regional protection available)*: ARIPO (BW, GH, GM, KE, LS, MW, MZ, NA, SD, SL, SZ, TZ, UG, ZM, ZW), Eurasian (AM, AZ, BY, KG, KZ, MD, RU, TJ, TM), European (AT, BE, BG, CH, CY, CZ, DE, DK, EE, ES, FI, FR, GB, GR, HU, IE, IS, IT, LT, LU, MC, NL, PL, PT, RO, SE, SI, SK, TR), OAPI (BF, BJ, CF, CG, CI, CM, GA, GN, GQ, GW, ML, MR, NE, SN, TD, TG).

Published:
— *with international search report*

For two-letter codes and other abbreviations, refer to the "Guidance Notes on Codes and Abbreviations" appearing at the beginning of each regular issue of the PCT Gazette.

(54) Title: SKIPPING ROPES

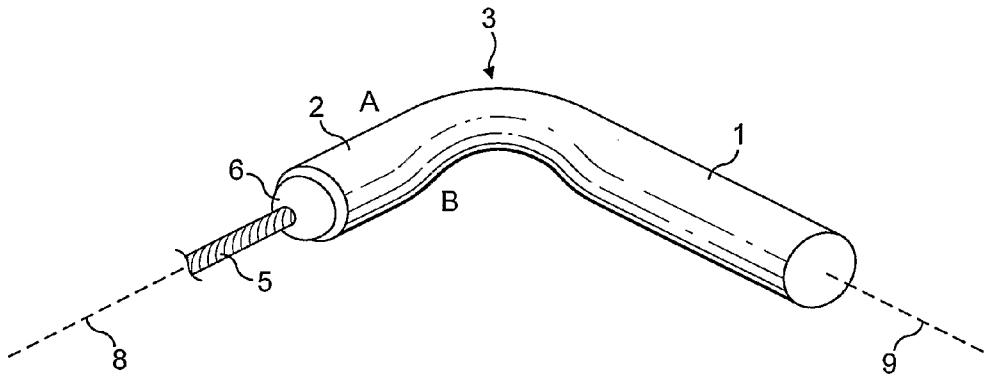

(57) **Abstract:** Skipping ropes are described with angled handles. One usually longer portion (1) is held between palm and fingers. A second portion (2) is angled and has a swivel mounted rope (5) projecting from its end. When skipping, the hands can be held with the palms facing the skipper's thighs, but with the rope ends pointing outwards. This is a more comfortable skipping position than the customary one with the hands splayed outwards.

WO 2005/087324 A1