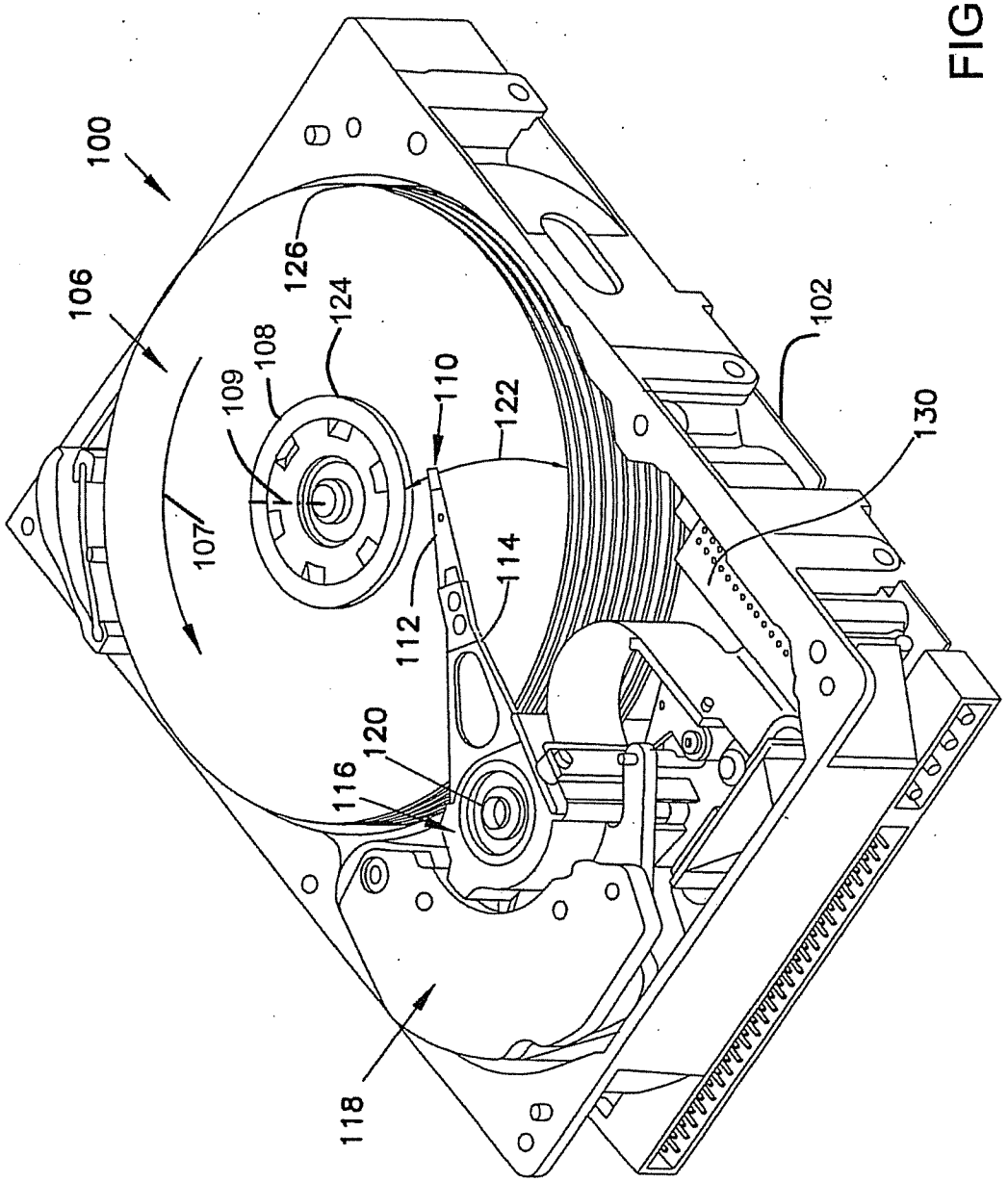

FIG. 1

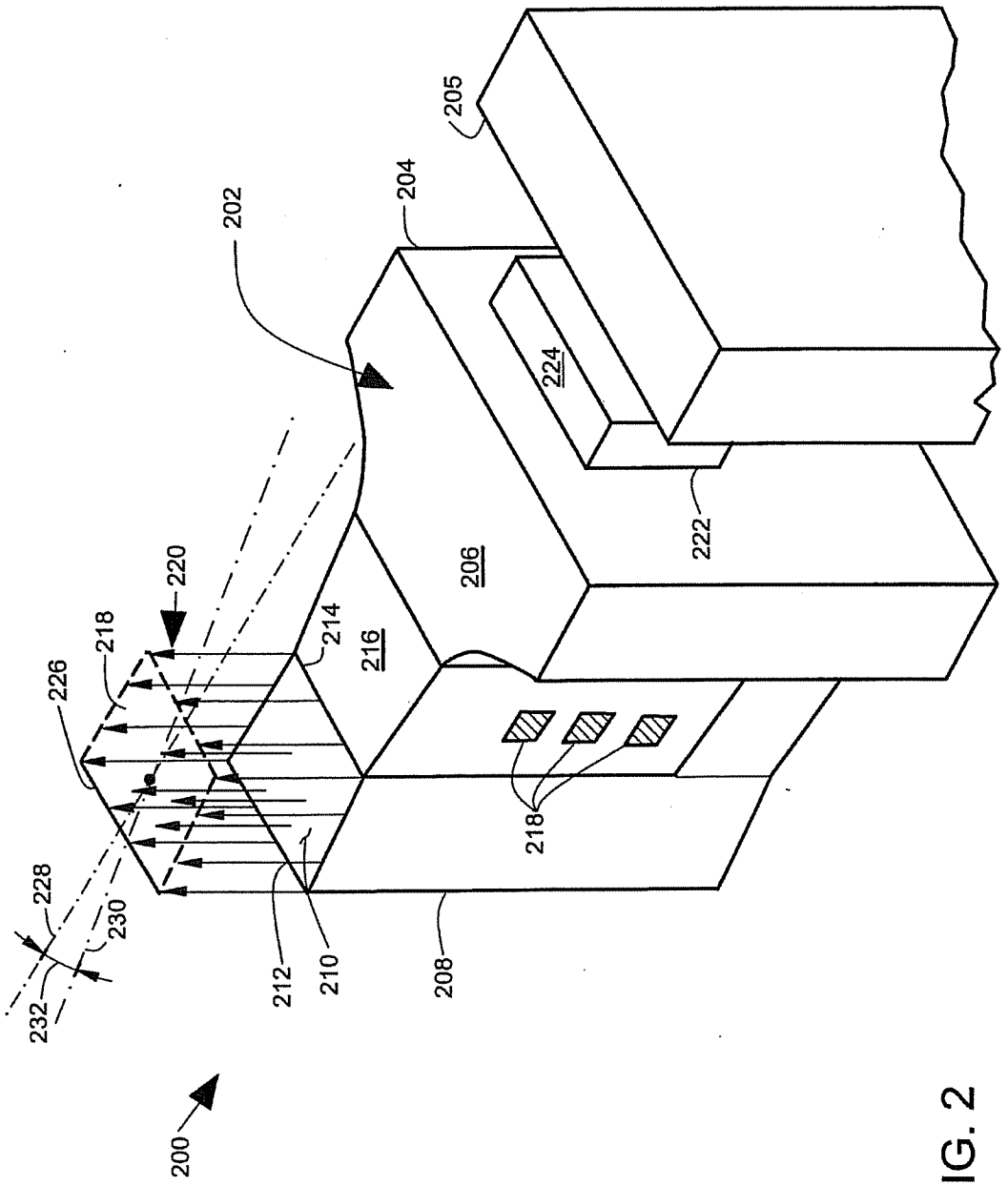
200
202
204
205
206
208
210
212
214
216
218
220
222
224
226
228
230
232

FIG. 2

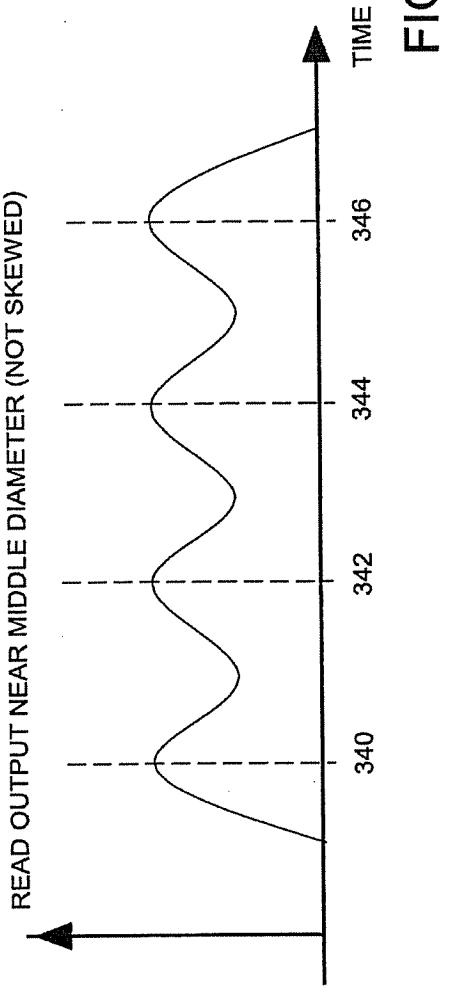
READ OUTPUT NEAR MIDDLE DIAMETER (NOT SKEWED)
TIME
340
342
344
346

FIG 3A

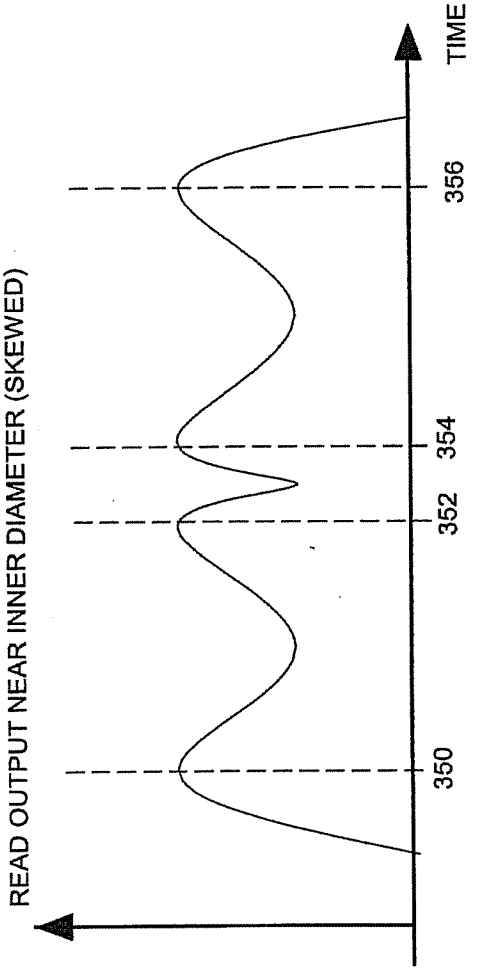
READ OUTPUT NEAR INNER DIAMETER (SKEWED)
TIME
350
352
354
356

FIG 3B

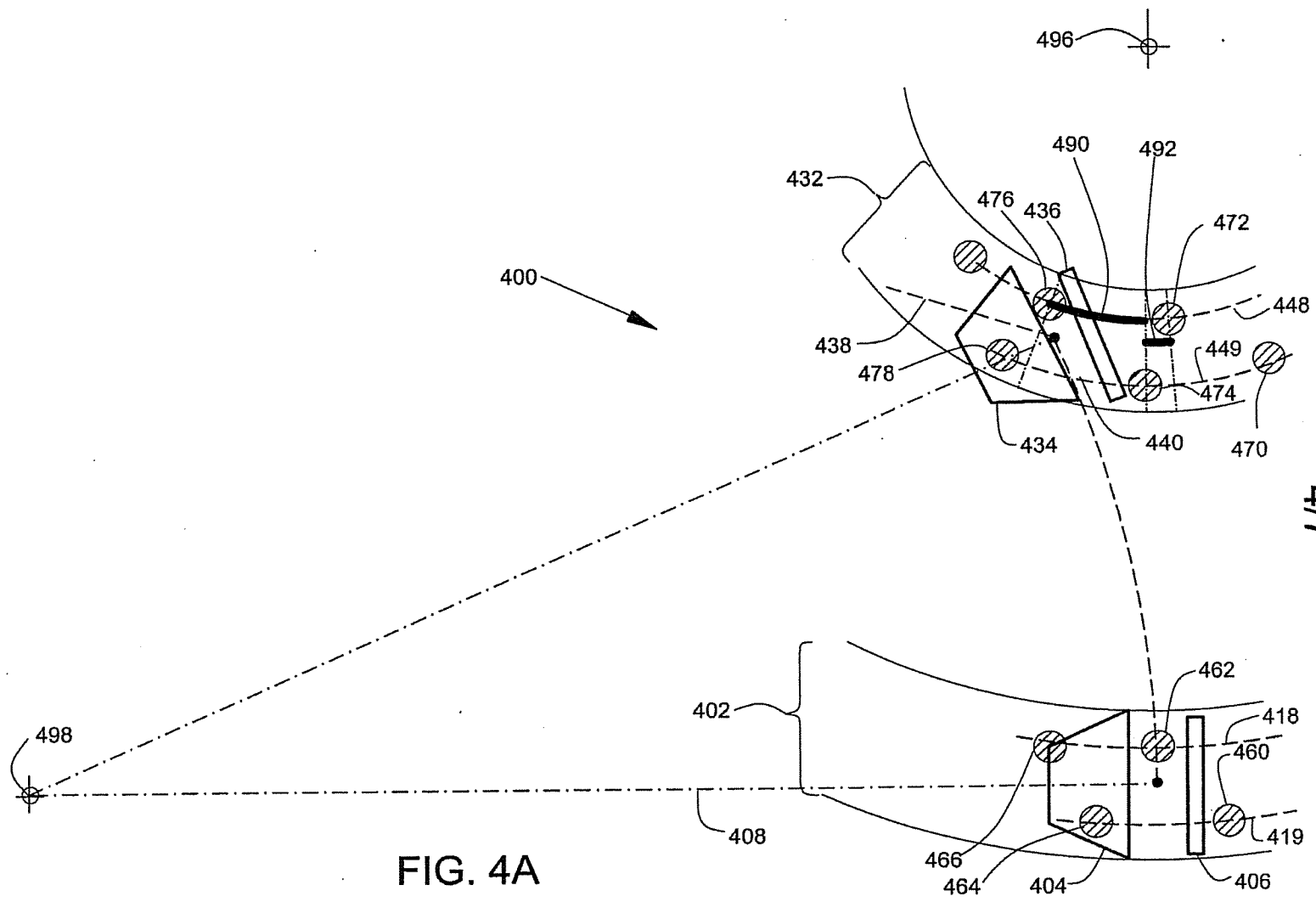
496
490
492
432
476
436
472
400
448
438
449
478
474
434
440
470
462
402
418
460
498
408
419
466
464
404
406

FIG. 4A

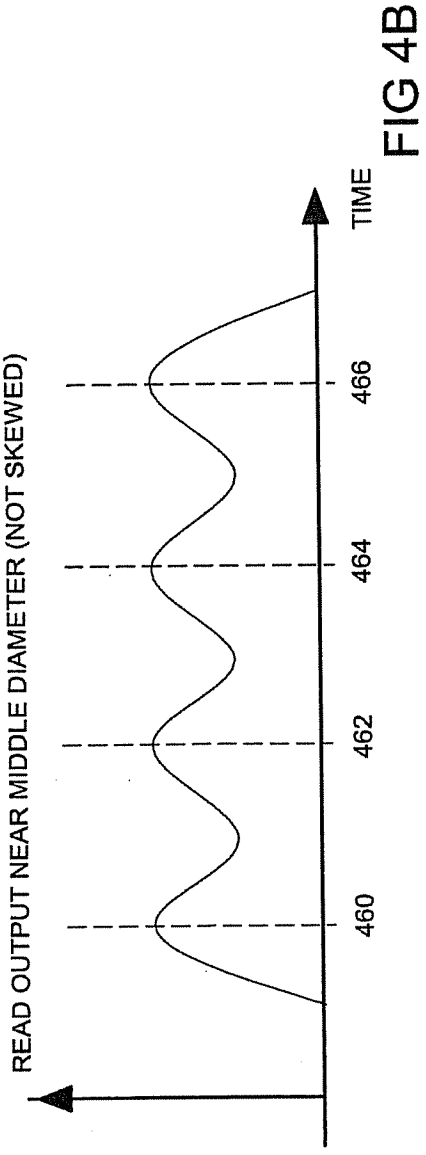
READ OUTPUT NEAR MIDDLE DIAMETER (NOT SKEWED)
TIME
460
462
464
466

FIG 4B

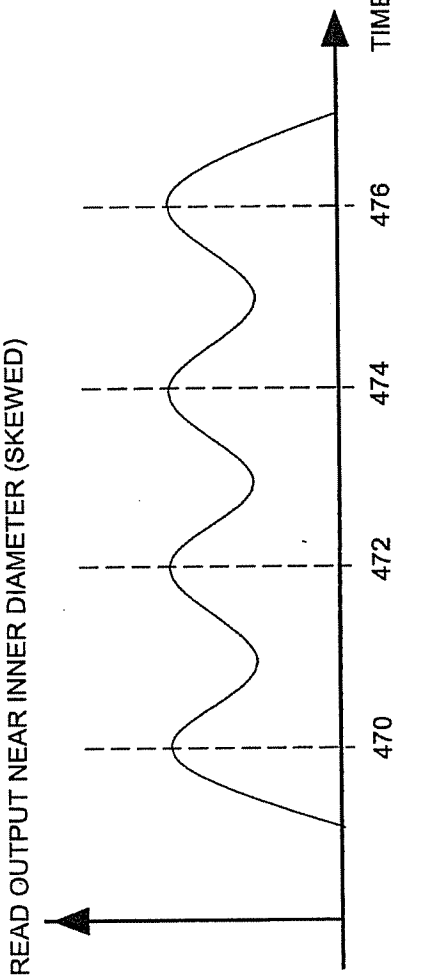
READ OUTPUT NEAR INNER DIAMETER (SKEWED)
TIME
470
472
474
476

FIG 4C

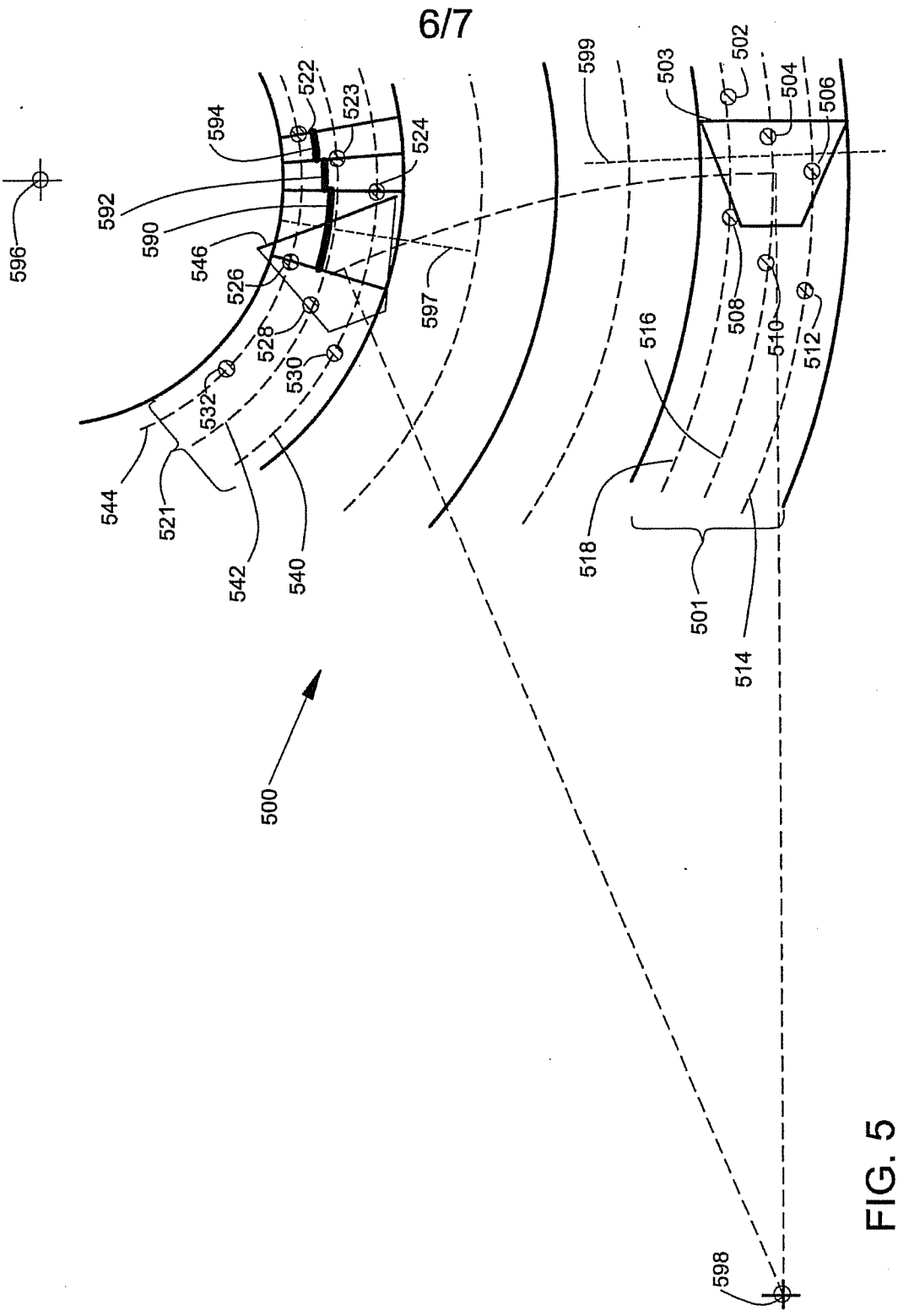
596
592
590
546
526
528
530
532
544
521
542
540
594
522
523
524
597
599
503
502
504
506
508
510
512
516
518
501
514
598
500

FIG. 5

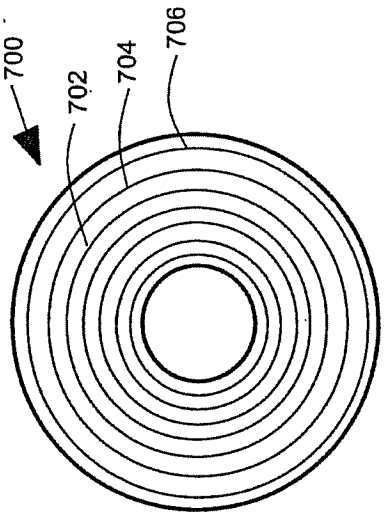

FIG. 7

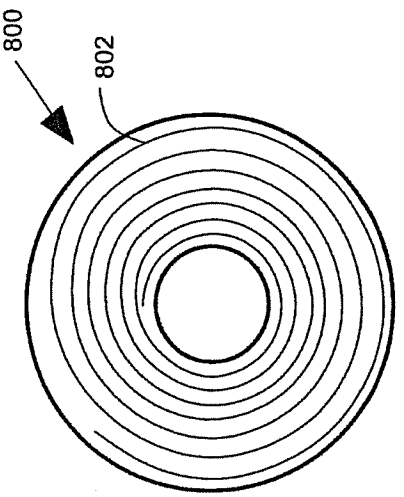

FIG. 8

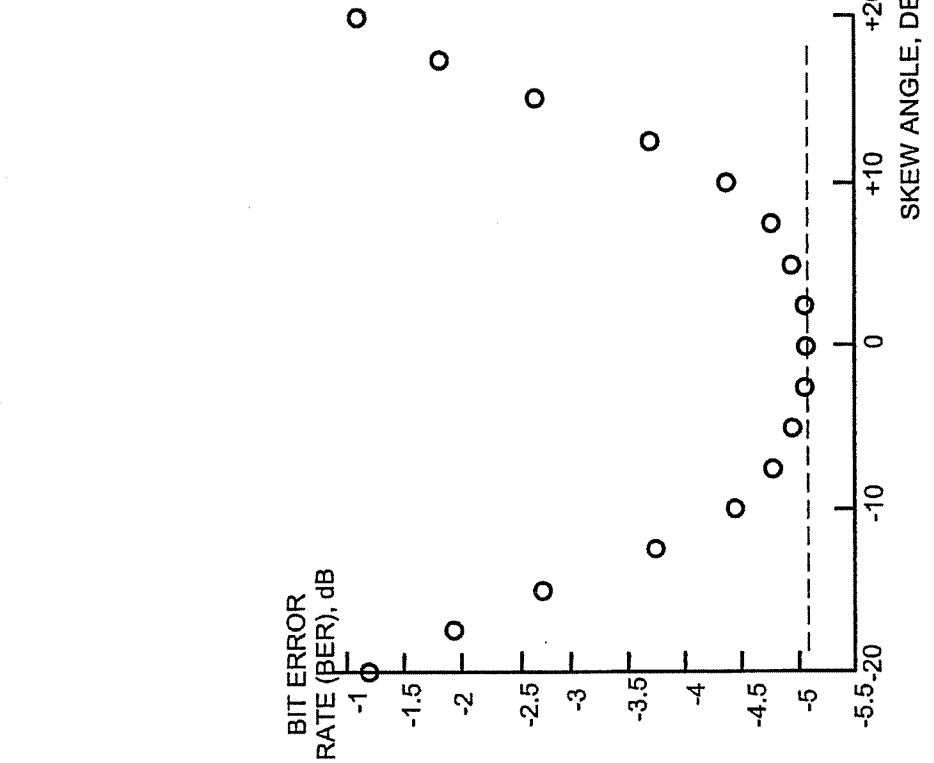

FIG. 6