(12) INTERNATIONAL APPLICATION PUBLISHED UNDER THE PATENT COOPERATION TREATY (PCT)

(19) World Intellectual Property Organization
International Bureau

(43) International Publication Date
12 July 2007 (12.07.2007)

PCT

(10) International Publication Number
WO 2007/078956 A3

(51) International Patent Classification:
B08B 3/00 (2006.01)

(21) International Application Number:
PCT/US2006/048552

(22) International Filing Date:
18 December 2006 (18.12.2006)

(25) Filing Language: English

(26) Publication Language: English

(30) Priority Data:
60/755,377 30 December 2005 (30.12.2005) US
11/543,365 4 October 2006 (04.10.2006) US

(71) Applicant *(for all designated States except US)*: **LAM RESEARCH CORPORATION** [US/US]; 4650 Cushing Parkway, Fremont, CA 94583 (US).

(72) Inventors; and

(75) Inventors/Applicants *(for US only)*: **FREER, Erik, M.** [US/US]; 347 W. Rincon Ave., #A, Campbell, CA 95008 (US). **DELARIOS, John, M.** [US/US]; 941 Loma Verde, Palo Alto, CA 94303 (US). **MIKHAYLICHENKO, Katrina** [RU/US]; 1818 Fumia Place, San Jose, CA 95151 (US). **RAVKIN, Michael** [US/US]; 1215 Knickerbocker Drive, Sunnyvale, CA 94087 (US). **KOROLIK, Mikhail** [RU/US]; 1751 Wayne Circle, San Josa, CA 95151. **REDEKER, Fritz, C.** [US/US]; 1801 Sioux Drive, Fremont, CA 94539 (US).

(74) Agent: **BROOKS, Kenneth, C.**; Martine Penilla & Gencarella, LLP, 710 Lakeway Drive, Suite 200, Sunnyvale, CA 94085 (US).

(81) Designated States *(unless otherwise indicated, for every kind of national protection available)*: AE, AG, AL, AM, AT, AU, AZ, BA, BB, BG, BR, BW, BY, BZ, CA, CH, CN, CO, CR, CU, CZ, DE, DK, DM, DZ, EC, EE, EG, ES, FI, GB, GD, GE, GH, GM, GT, HN, HR, HU, ID, IL, IN, IS, JP, KE, KG, KM, KN, KP, KR, KZ, LA, LC, LK, LR, LS, LT, LU, LV, LY, MA, MD, MG, MK, MN, MW, MX, MY, MZ, NA, NG, NI, NO, NZ, OM, PG, PH, PL, PT, RO, RS, RU, SC, SD, SE, SG, SK, SL, SM, SV, SY, TJ, TM, TN, TR, TT, TZ, UA, UG, US, UZ, VC, VN, ZA, ZM, ZW.

(84) Designated States *(unless otherwise indicated, for every kind of regional protection available)*: ARIPO (BW, GH, GM, KE, LS, MW, MZ, NA, SD, SL, SZ, TZ, UG, ZM, ZW), Eurasian (AM, AZ, BY, KG, KZ, MD, RU, TJ, TM), European (AT, BE, BG, CH, CY, CZ, DE, DK, EE, ES, FI, FR, GB, GR, HU, IE, IS, IT, LT, LU, LV, MC, NL, PL, PT,

[Continued on next page]

(54) Title: METHOD AND APPARATUS FOR PARTICLE REMOVAL

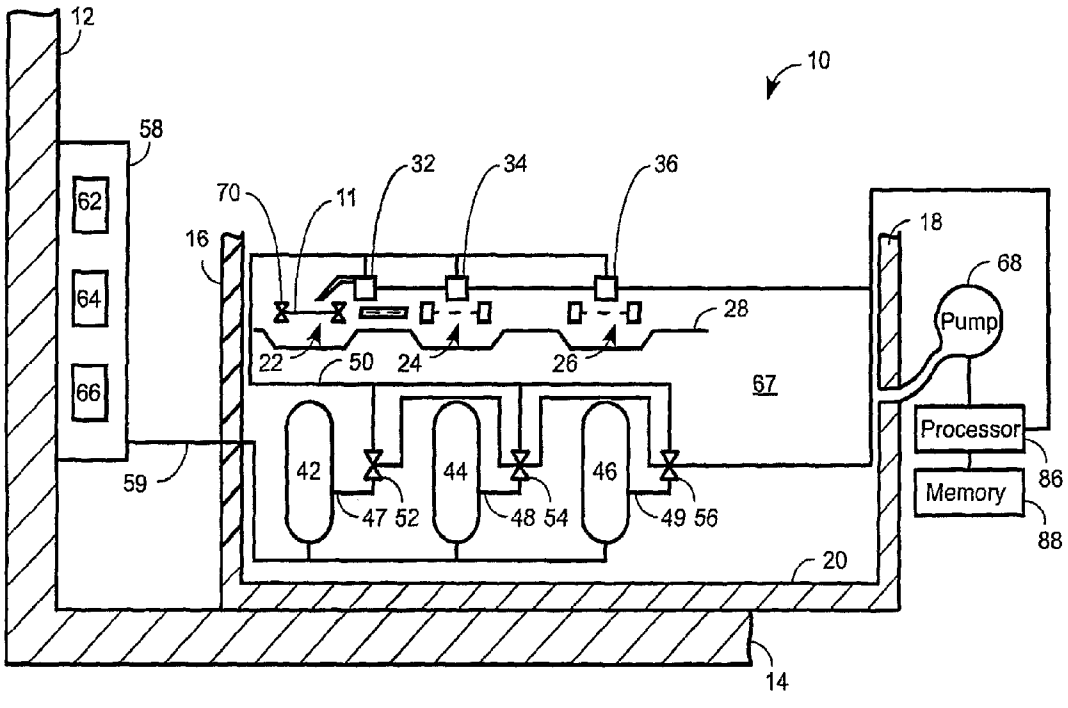

(57) Abstract: A method and system for cleaning a surface, having particulate matter thereon, of a substrate features impinging upon the surface a jet of a liquid having coupling elements entrained therein. A sufficient drag force is imparted upon the coupling elements to have the same move with respect to the liquid and cause the particulate matter to move with respect to the substrate.

WO 2007/078956 A3

RO, SE, SI, SK, TR), OAPI (BF, BJ, CF, CG, CI, CM, GA, GN, GQ, GW, ML, MR, NE, SN, TD, TG).

Published:
— *with international search report*

(88) Date of publication of the international search report:
3 January 2008

For two-letter codes and other abbreviations, refer to the "Guidance Notes on Codes and Abbreviations" appearing at the beginning of each regular issue of the PCT Gazette.