(12) INTERNATIONAL APPLICATION PUBLISHED UNDER THE PATENT COOPERATION TREATY (PCT)

(19) World Intellectual Property Organization
International Bureau

(43) International Publication Date
12 October 2006 (12.10.2006)

PCT

(10) International Publication Number
WO 2006/106295 A1

(51) International Patent Classification:
A61M 5/145 (2006.01)

(21) International Application Number:
PCT/GB2006/001031

(22) International Filing Date: 21 March 2006 (21.03.2006)

(25) Filing Language: English

(26) Publication Language: English

(30) Priority Data:
0507016.4 6 April 2005 (06.04.2005) GB

(71) Applicant *(for all designated States except US)*: **CILAG AG INTERNATIONAL** [CH/CH]; Landis & Gyrstrasse 1, CH-6300 (CH).

(72) Inventors; and

(75) Inventors/Applicants *(for US only)*: **BARROW-WILLIAMS, Timothy, Donald** [GB/GB]; 200 London Road, St. Albans, Hertfordshire AL1 1PL (GB). **EDINGTON, David** [GB/GB]; Apartment 3, Brisbane House, 38 Grosvenor Road, St. Albans, Hertfordshire AL1 3AE (GB).

(74) Agents: **TUNSTALL, Christopher, Stephen** et al.; Carpmaels & Ransford, 43-45 Bloomsbury Square, London WC1A 2RA (GB).

(81) Designated States *(unless otherwise indicated, for every kind of national protection available)*: AE, AG, AL, AM, AT, AU, AZ, BA, BB, BG, BR, BW, BY, BZ, CA, CH, CN, CO, CR, CU, CZ, DE, DK, DM, DZ, EC, EE, EG, ES, FI, GB, GD, GE, GH, GM, HR, HU, ID, IL, IN, IS, JP, KE, KG, KM, KN, KP, KR, KZ, LC, LK, LR, LS, LT, LU, LV, LY, MA, MD, MG, MK, MN, MW, MX, MZ, NA, NG, NI, NO, NZ, OM, PG, PH, PL, PT, RO, RU, SC, SD, SE, SG, SK, SL, SM, SY, TJ, TM, TN, TR, TT, TZ, UA, UG, US, UZ, VC, VN, YU, ZA, ZM, ZW.

(84) Designated States *(unless otherwise indicated, for every kind of regional protection available)*: ARIPO (BW, GH, GM, KE, LS, MW, MZ, NA, SD, SL, SZ, TZ, UG, ZM, ZW), Eurasian (AM, AZ, BY, KG, KZ, MD, RU, TJ, TM), European (AT, BE, BG, CH, CY, CZ, DE, DK, EE, ES, FI, FR, GB, GR, HU, IE, IS, IT, LT, LU, LV, MC, NL, PL, PT, RO, SE, SI, SK, TR), OAPI (BF, BJ, CF, CG, CI, CM, GA, GN, GQ, GW, ML, MR, NE, SN, TD, TG).

Published:
— *with international search report*

For two-letter codes and other abbreviations, refer to the "Guidance Notes on Codes and Abbreviations" appearing at the beginning of each regular issue of the PCT Gazette.

(54) Title: INJECTION DEVICE (ADAPTABLE DEVICE)

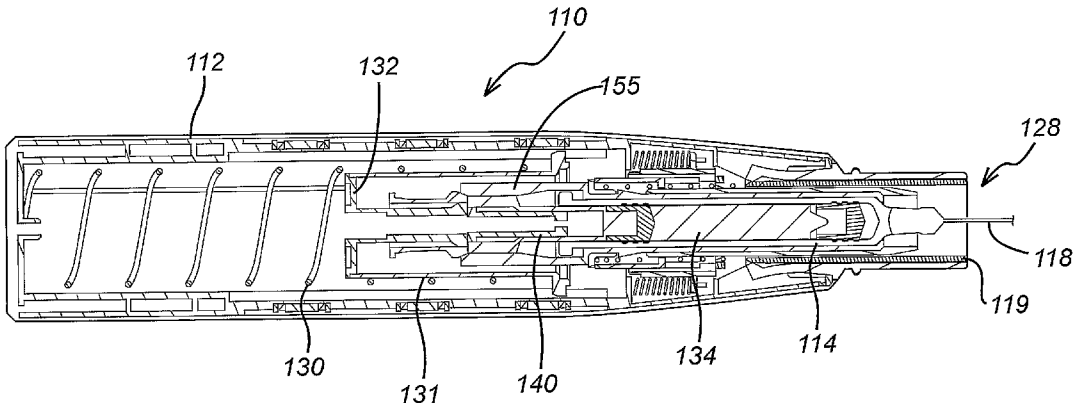

(57) Abstract: An injection device (110) comprises a housing (112) adapted to receive a syringe (116) having a discharge nozzle (118) and a dispensing piston (114) movable in the syringe to expel the contents of the syringe through the discharge nozzle. There is also a drive (130) adapted to act on the syringe to advance it from a retracted position in which the discharge nozzle is contained within the housing to an extended position in which the discharge nozzle extends from the housing. A drive coupling (134) extends from the drive to the dispensing piston of the syringe so as to transfer movement of the drive to the piston. The drive coupling comprises a fixed-length drive coupling and an interchangeable drive coupling. There is also a method of manufacturing an injection device by assembling a first sub-assembly (210) and second sub-assembly (220) .

WO 2006/106295 A1