Fig.1

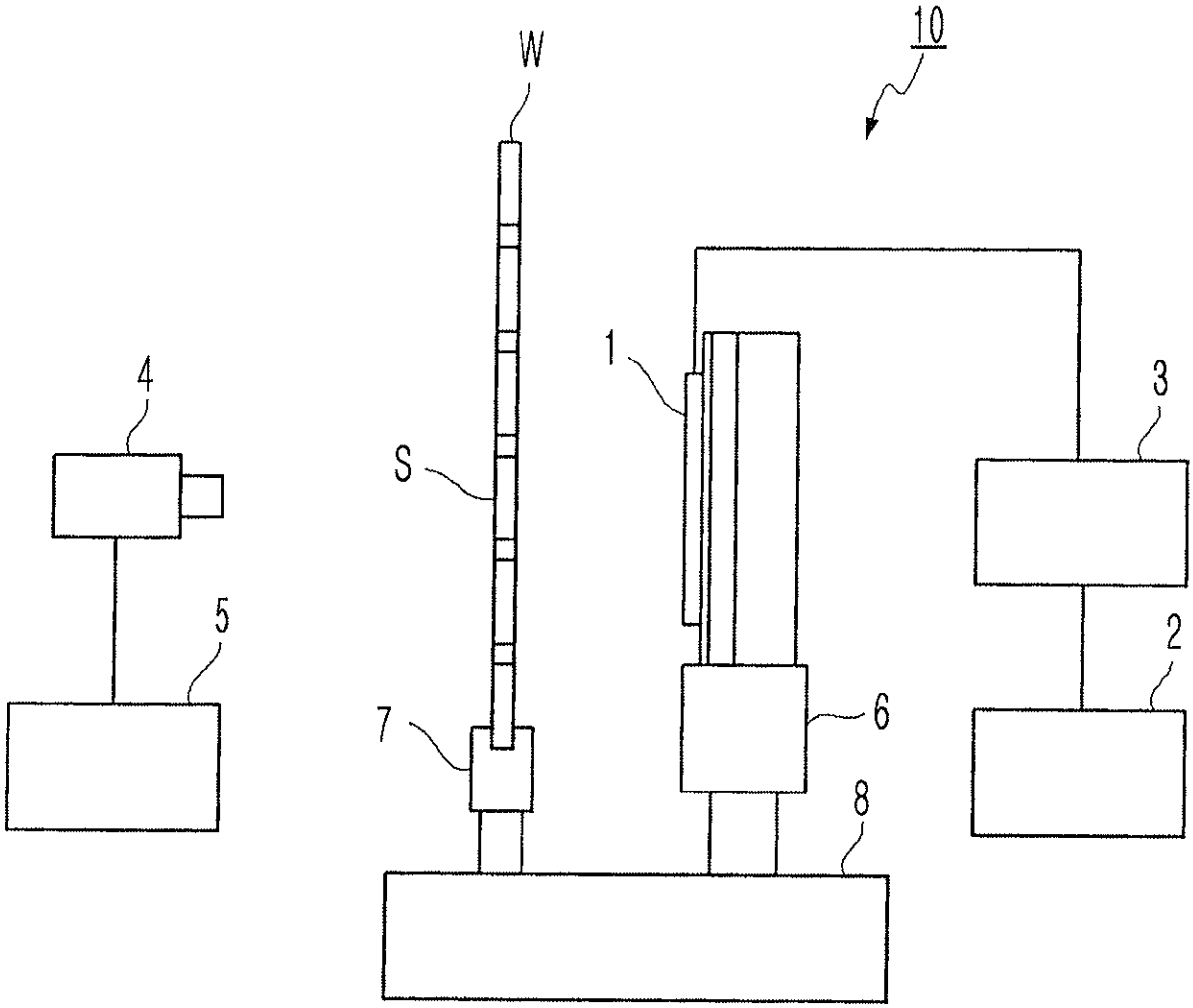

Fig.2A

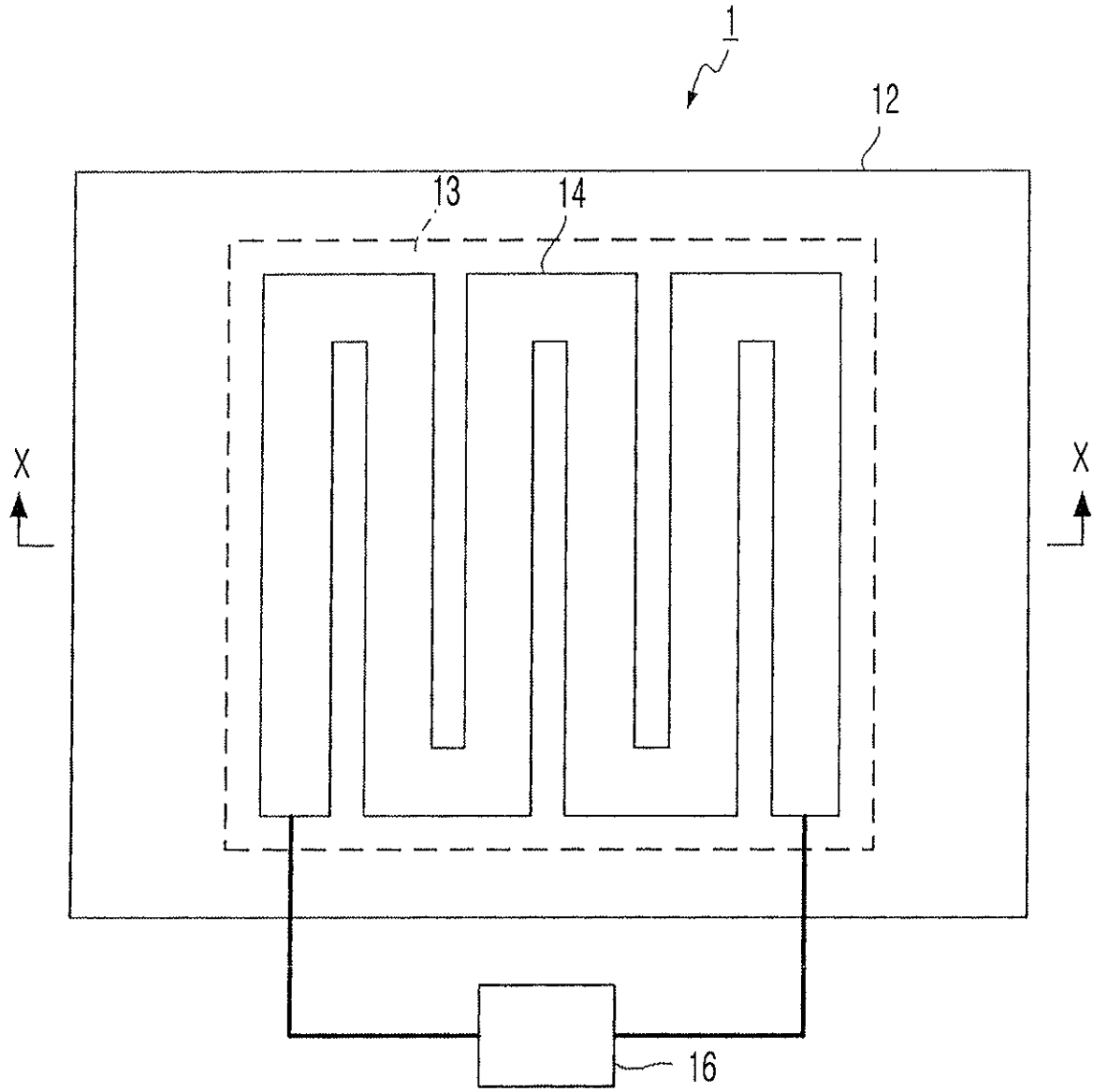

Fig.2B

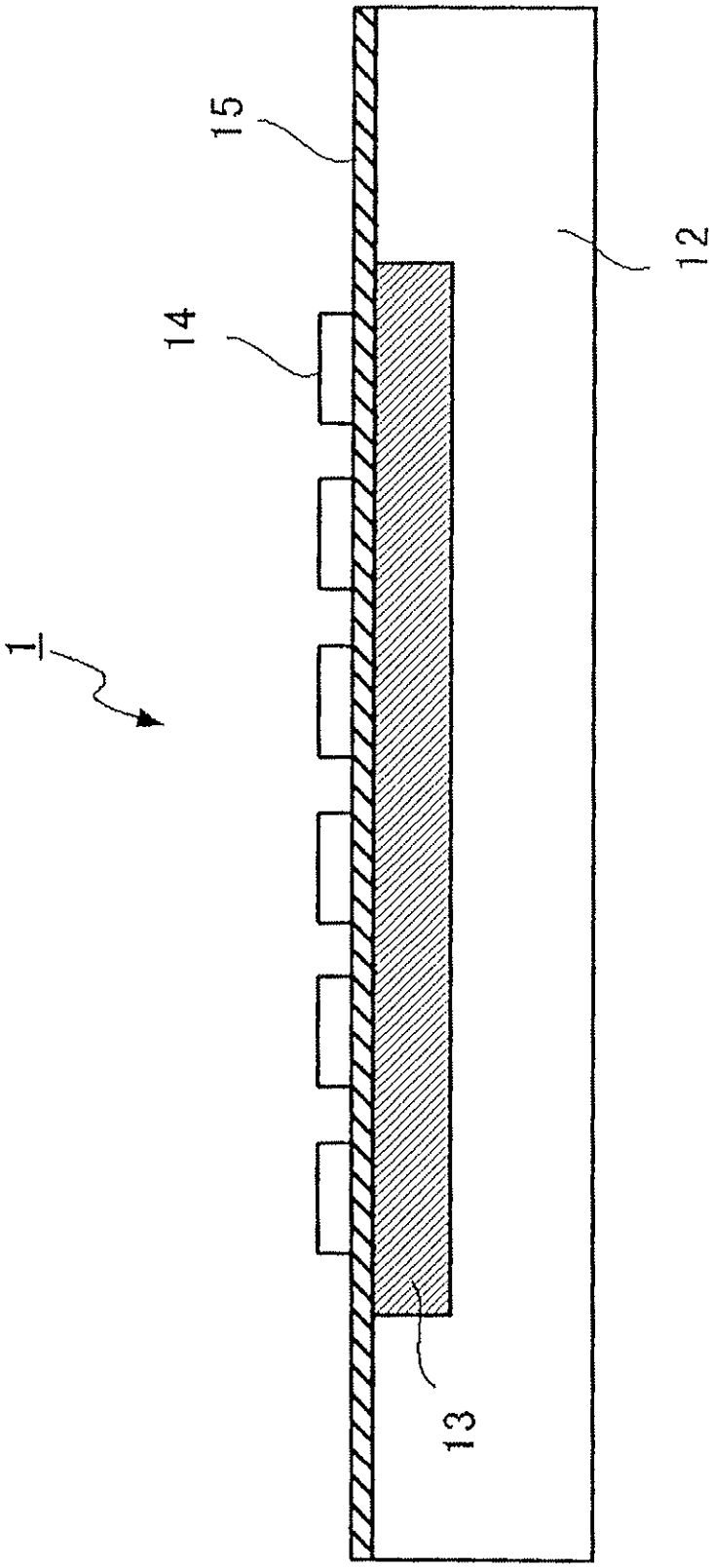

Fig.3

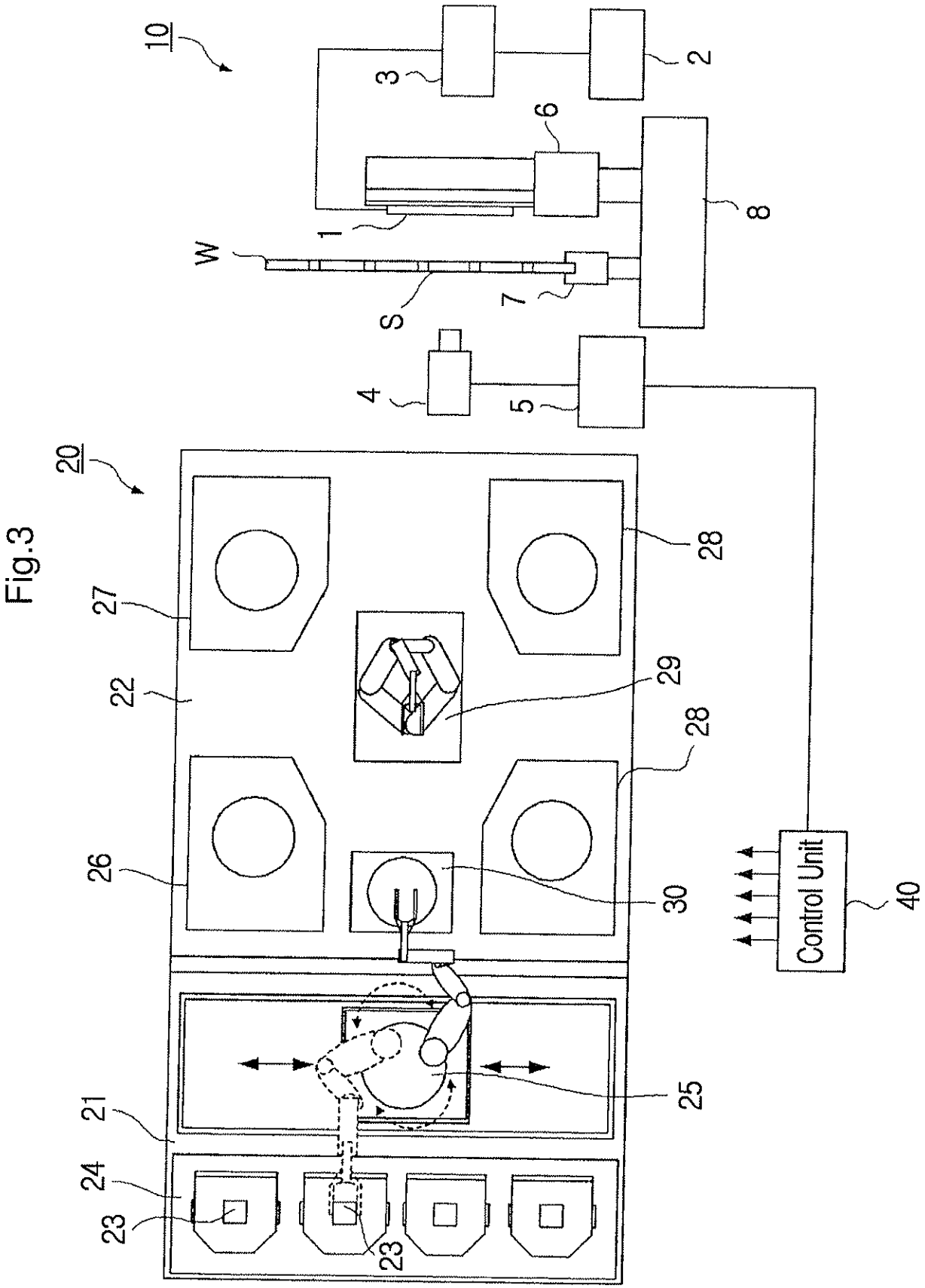
10
3
2
6
8
1
W
S
7
4
5
20
28
27
22
29
28
26
30
Control Unit
40
25
21
24
23
23

Fig.4

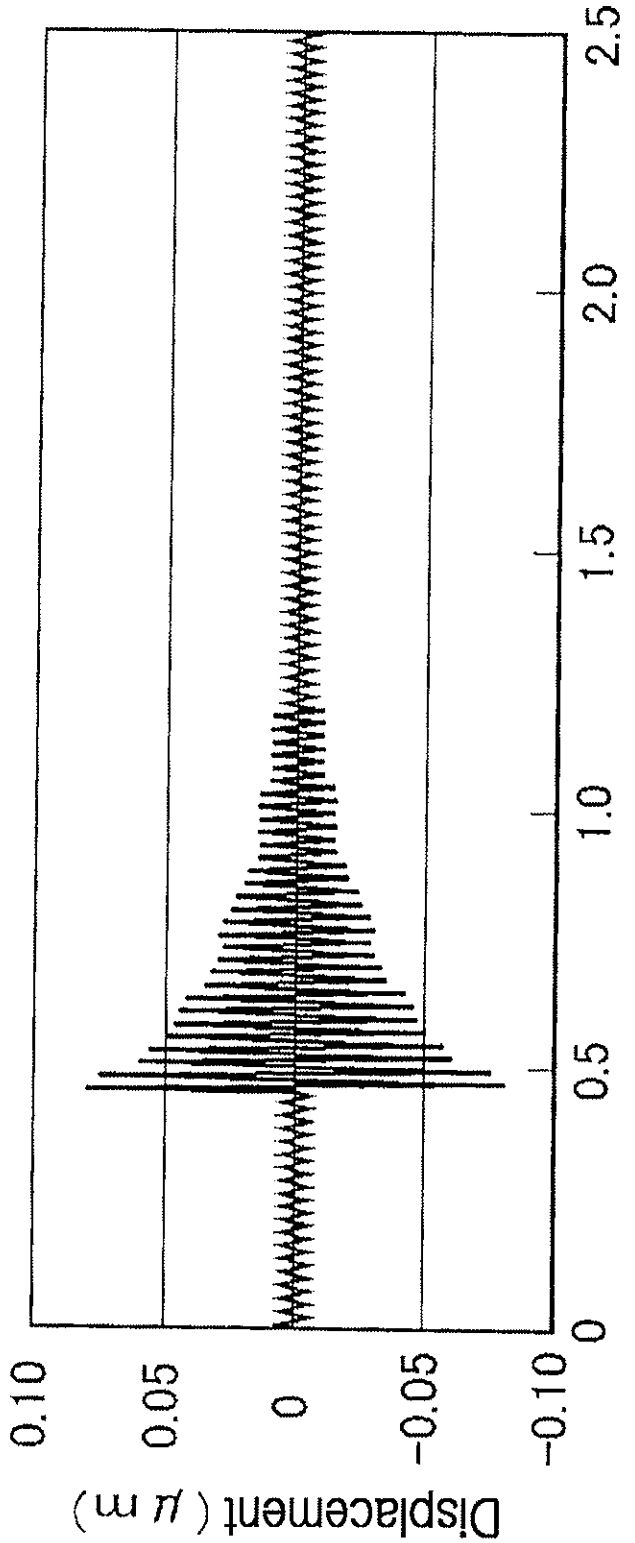

Fig.5

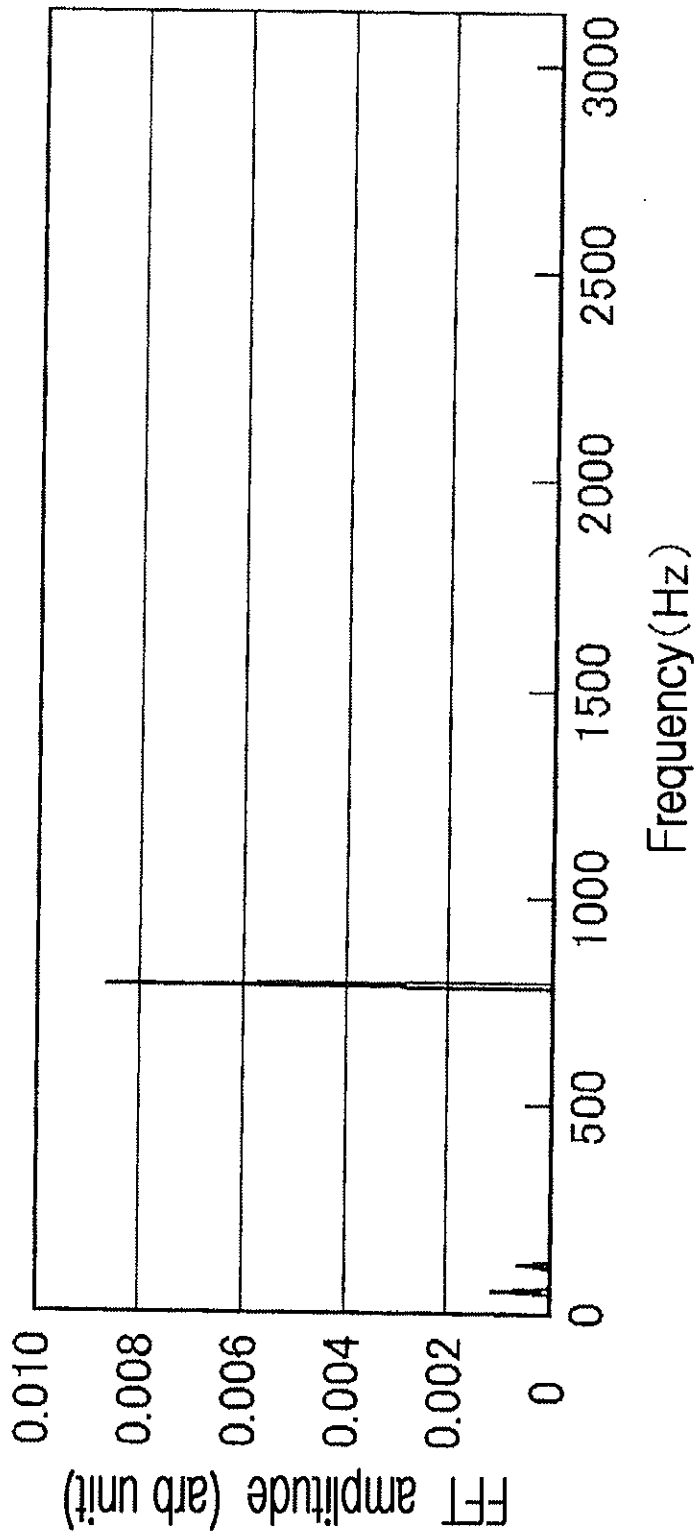
FFT amplitude (arb unit)
0.010
0.008
0.006
0.004
0.002
0
0
500
1000
1500
2000
2500
3000
Frequency(Hz)

Fig.6

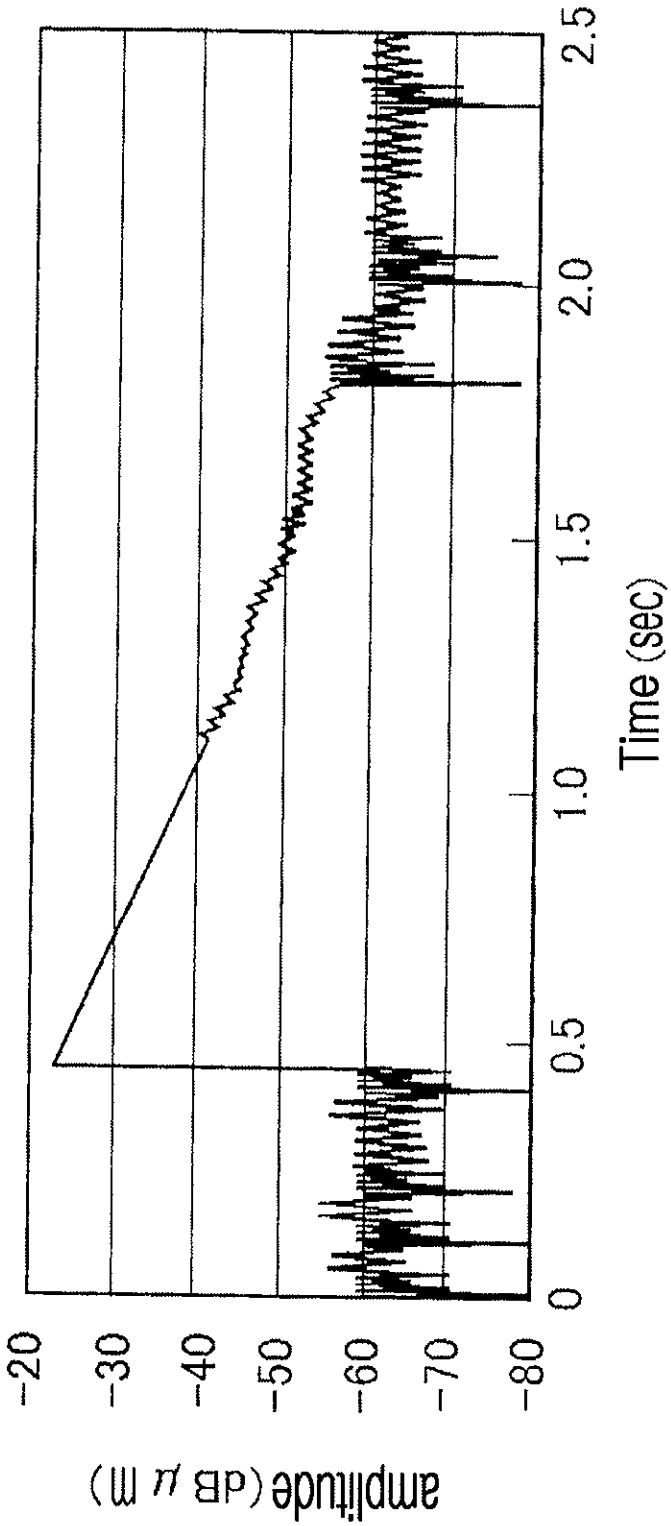

Fig.7

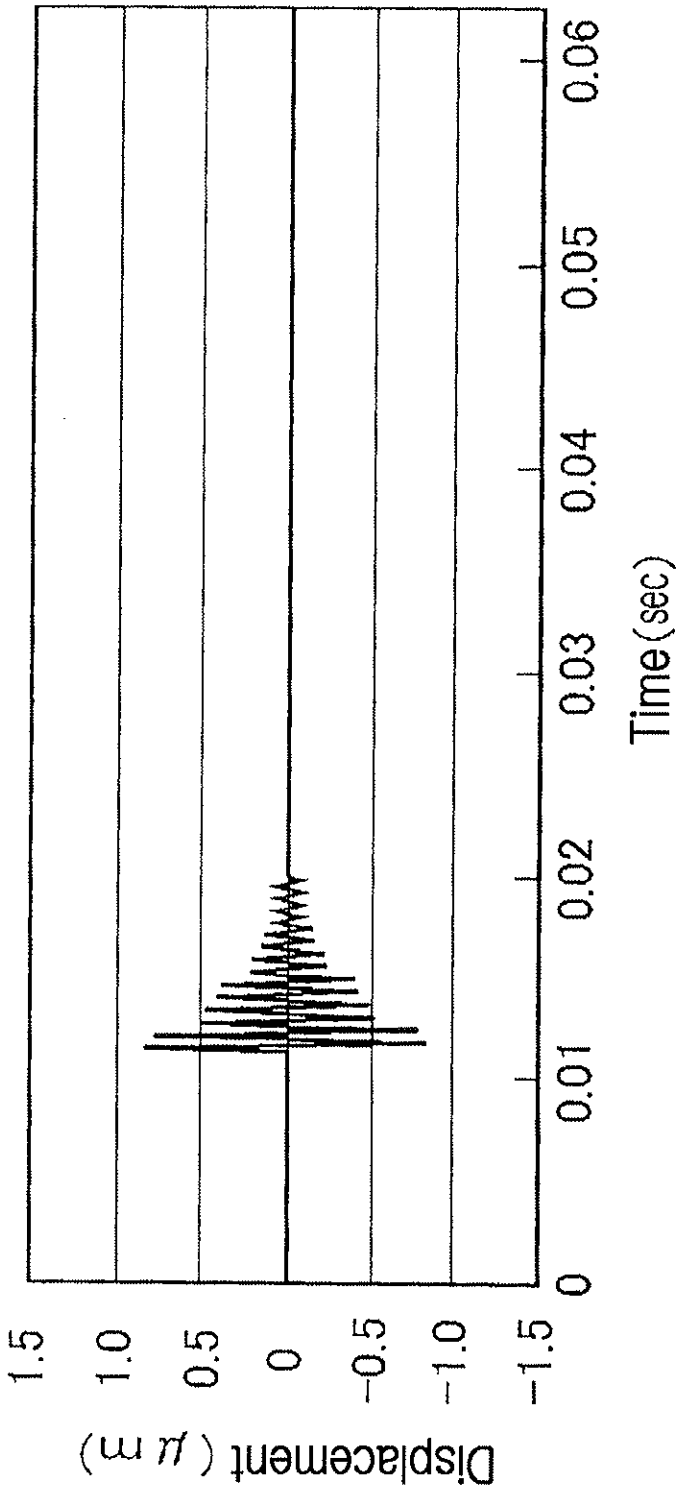
Displacement (μm)
1.5
1.0
0.5
0
−0.5
−1.0
−1.5
0
0.01
0.02
0.03
0.04
0.05
0.06
Time(sec)

Fig.8

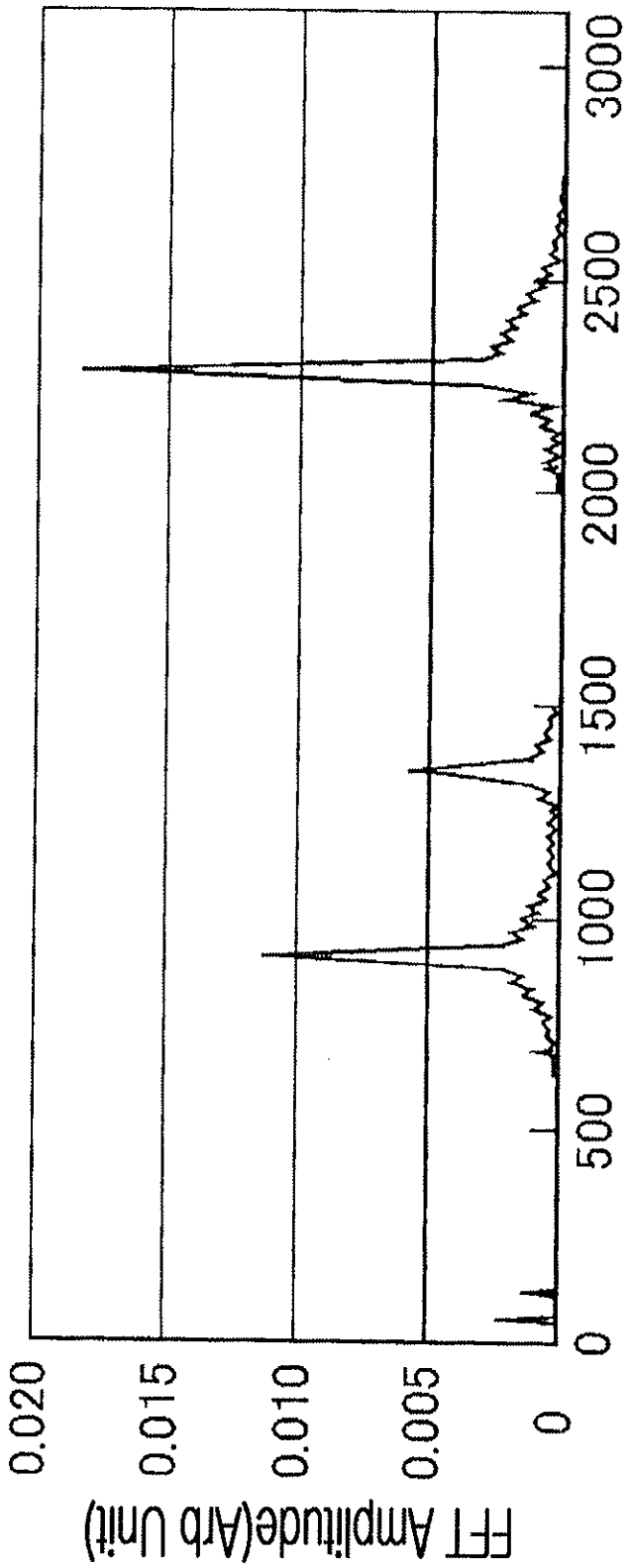
FFT Amplitude(Arb Unit)
0.020
0.015
0.010
0.005
0
0
500
1000
1500
2000
2500
3000
Frequency (Hz)

Fig.9A

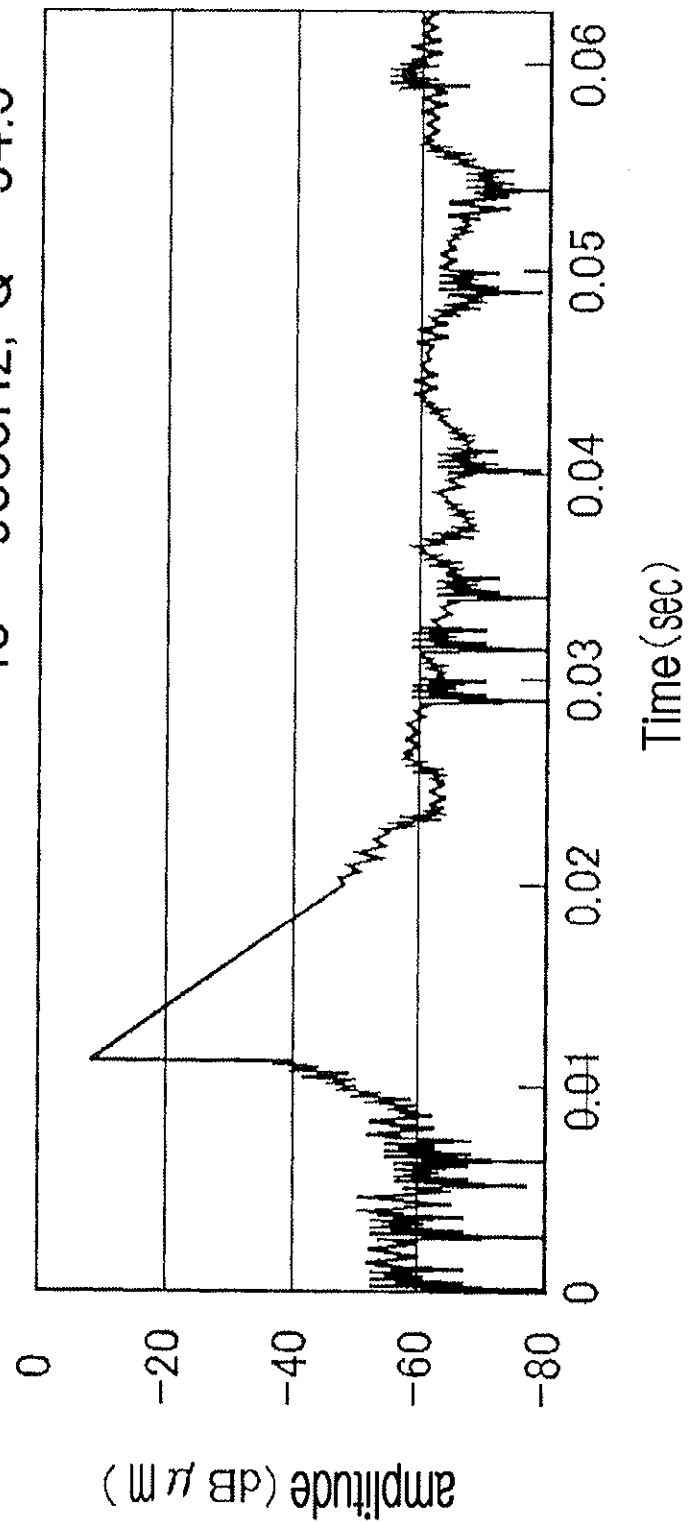
f0 = 9030Hz, Q = 54.5
amplitude (dB μM)
0
-20
-40
-60
-80
0
0.01
0.02
0.03
0.04
0.05
0.06
Time(sec)

Fig.9B

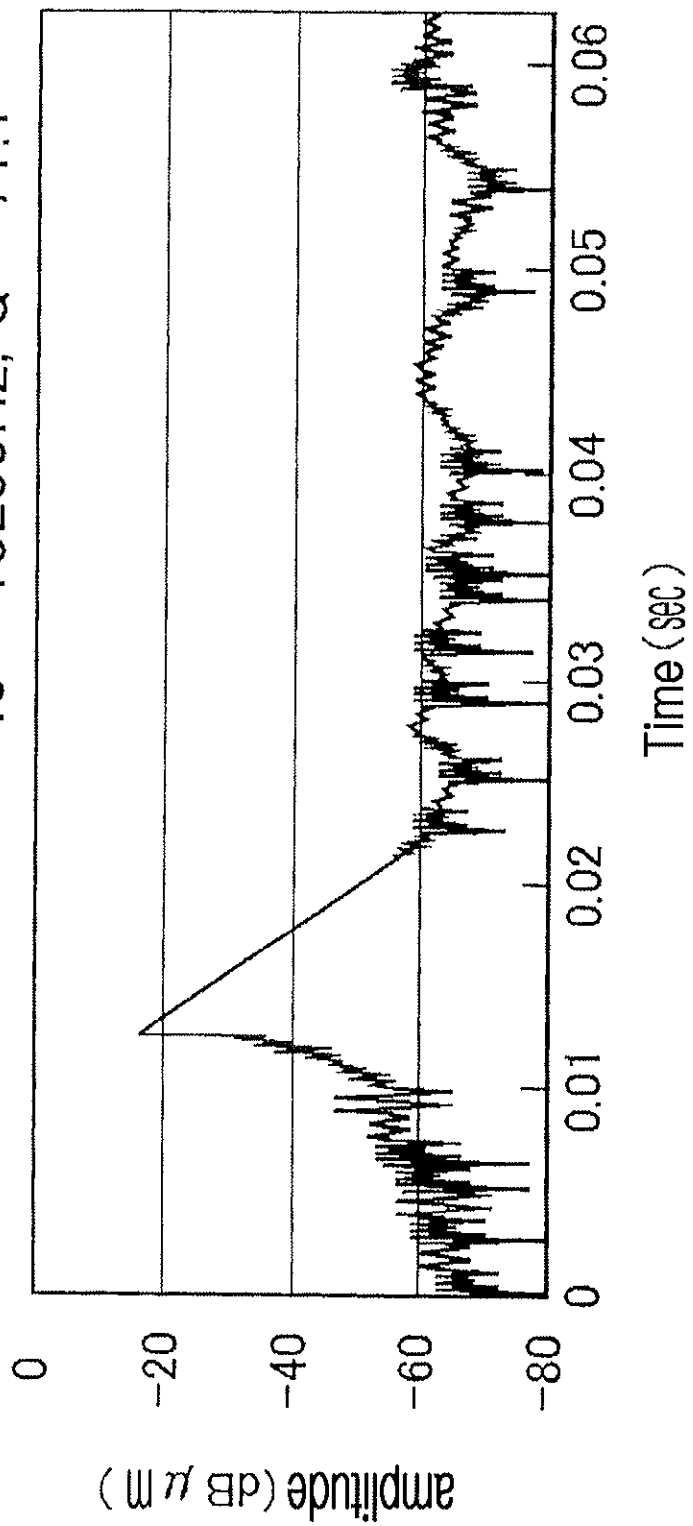
f0 = 13200Hz, Q = 71.1
amplitude (dB μM)
0
-20
-40
-60
-80
0
0.01
0.02
0.03
0.04
0.05
0.06
Time (sec)

Fig.9C

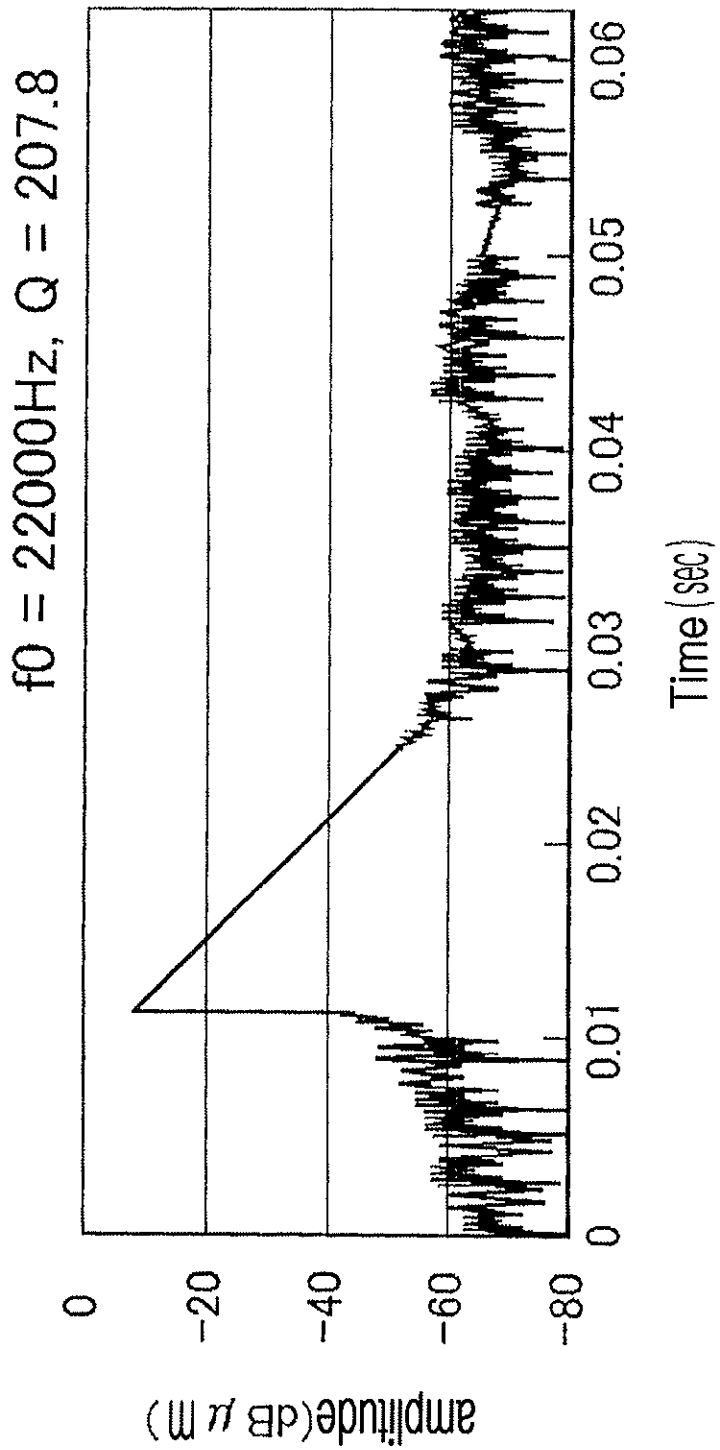
f0 = 22000Hz, Q = 207.8
amplitude(dB μ m)
0
-20
-40
-60
-80
0
0.01
0.02
0.03
0.04
0.05
0.06
Time(sec)