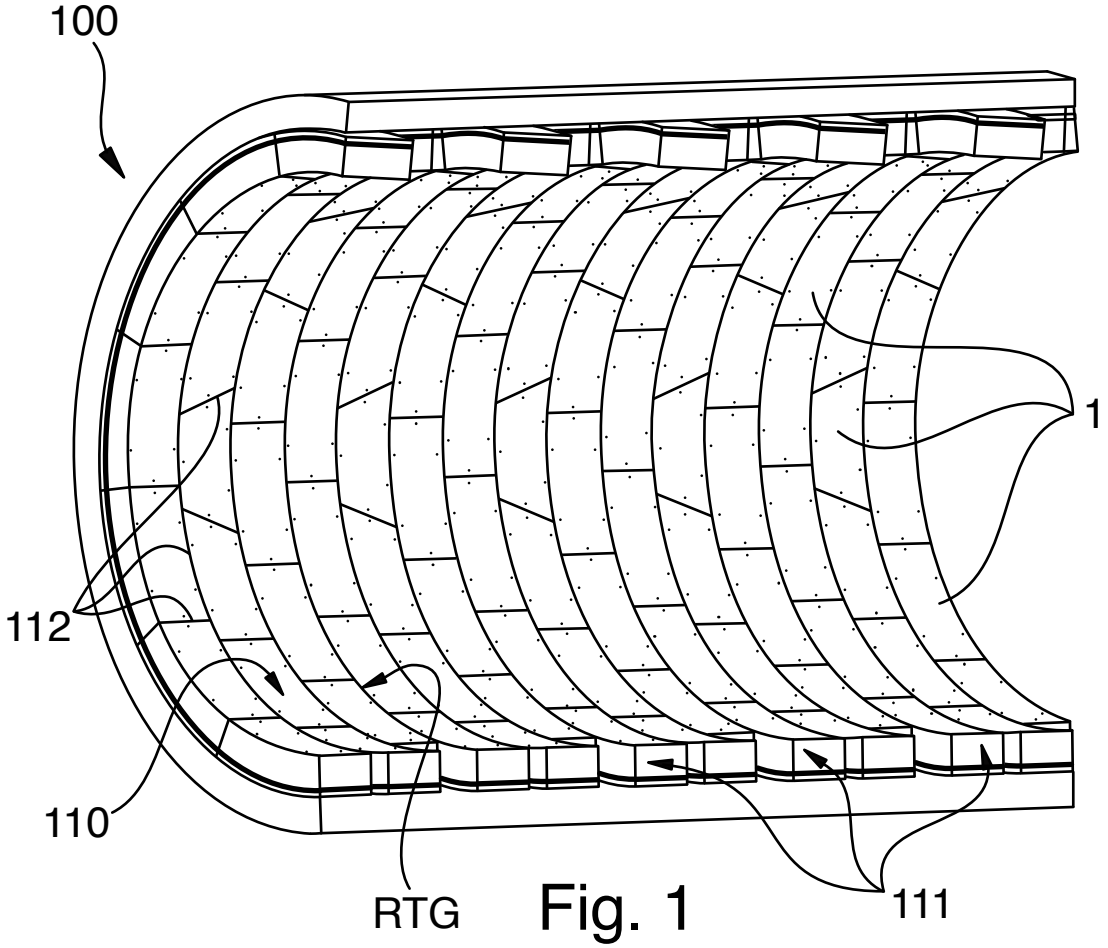
100
1
112
110
RTG
111

Fig. 1

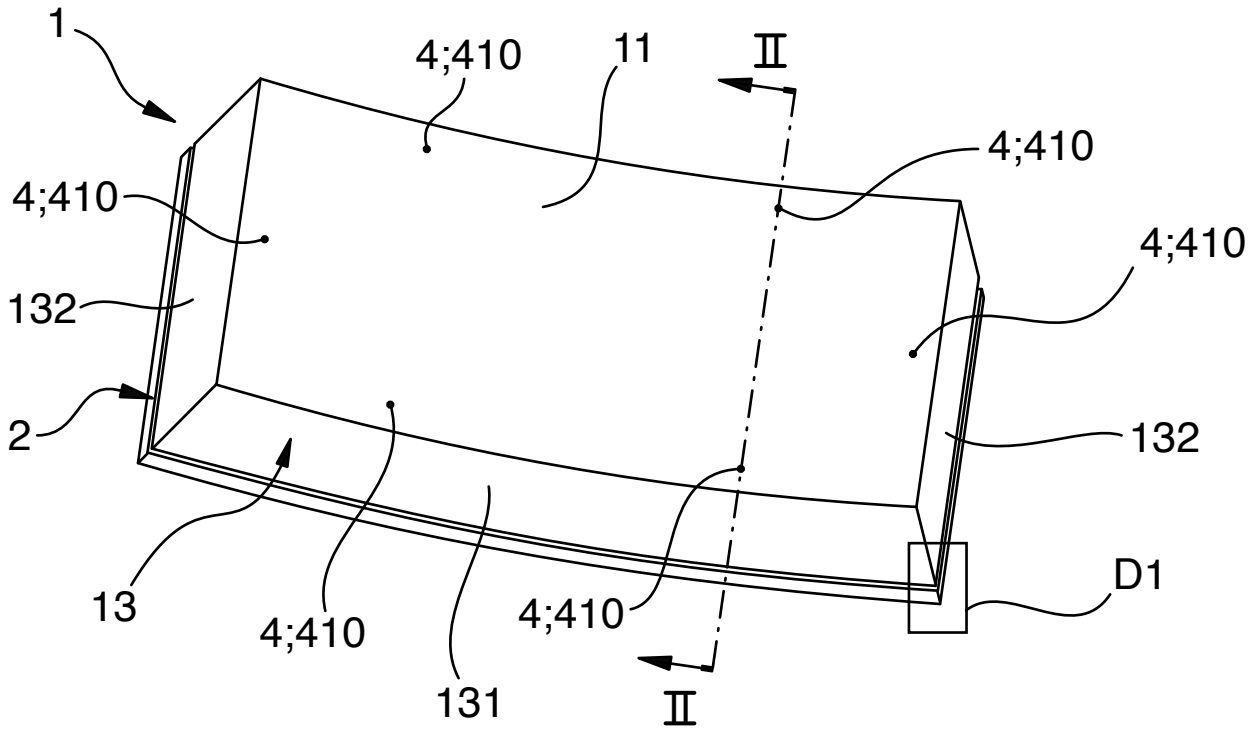
1
4;410
11
II
4;410
4;410
4;410
132
2
132
13
4;410
4;410
131
D1
II

Fig. 2

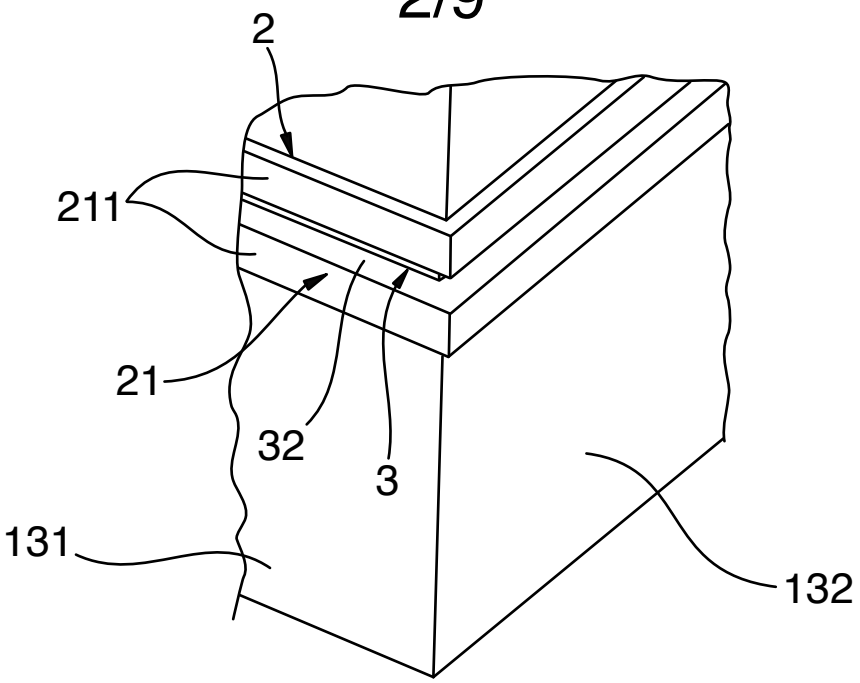

Fig. 2a

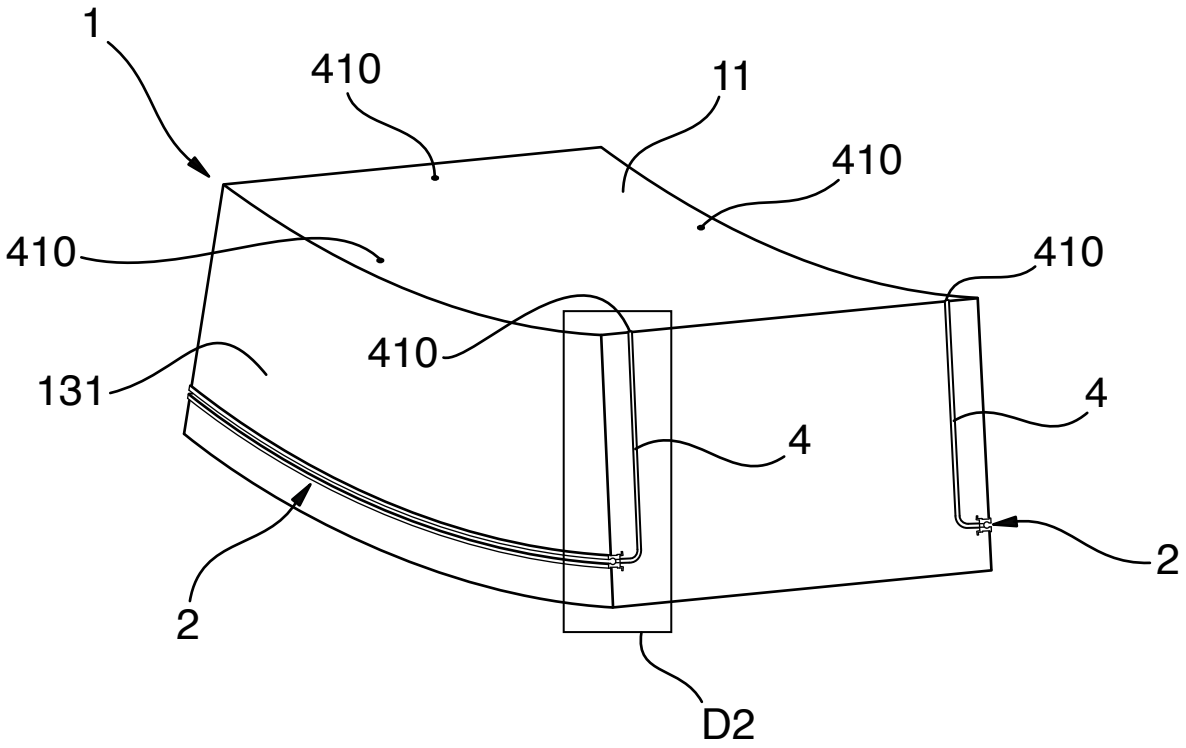

Fig. 2b

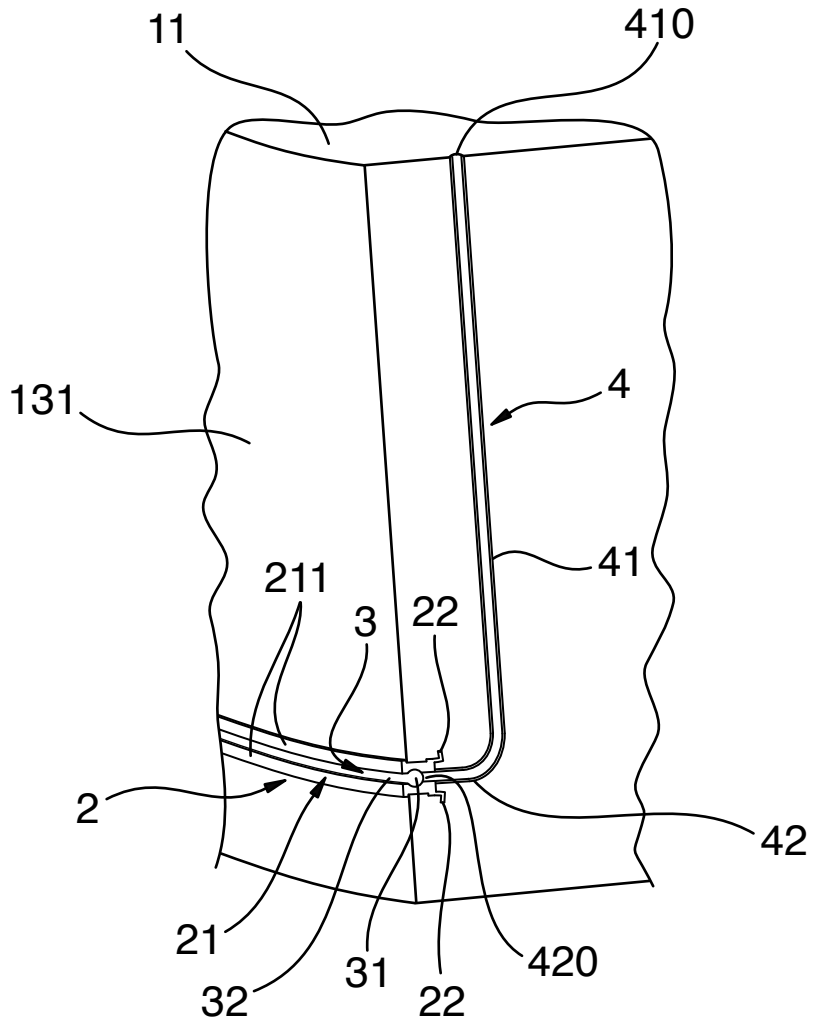
11
410
131
4
41
211
3
22
2
42
21
32
31
22
420

Fig. 2c

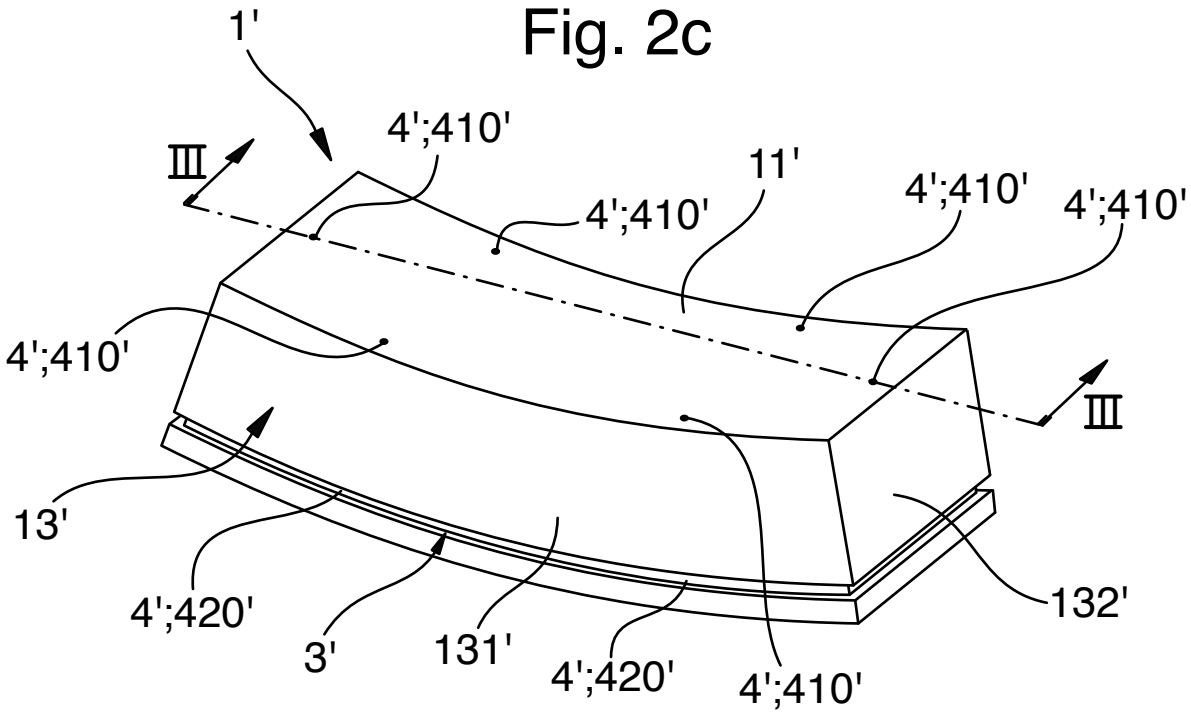
1'
III
4';410'
4';410'
11'
4';410'
4';410'
4';410'
III
13'
4';420'
3'
131'
4';420'
4';410'
132'

Fig. 3

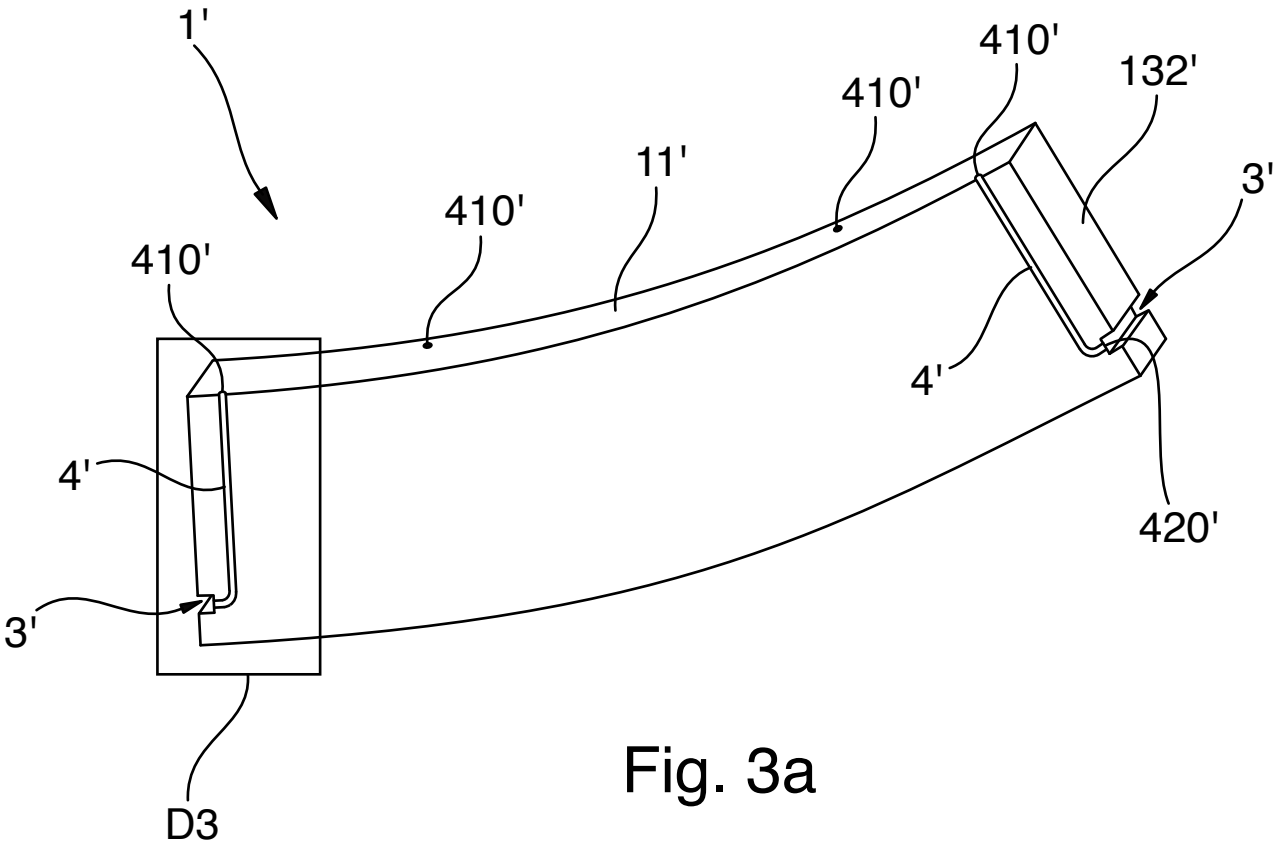

Fig. 3a

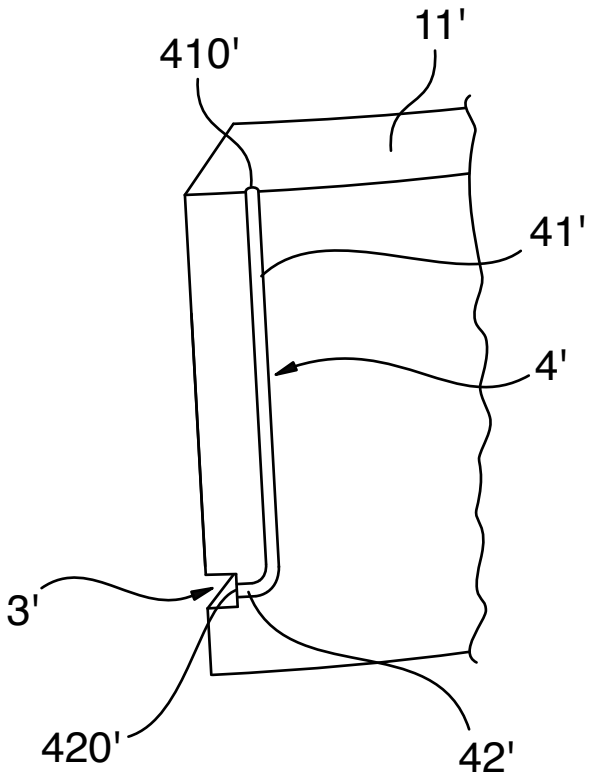

Fig. 3b

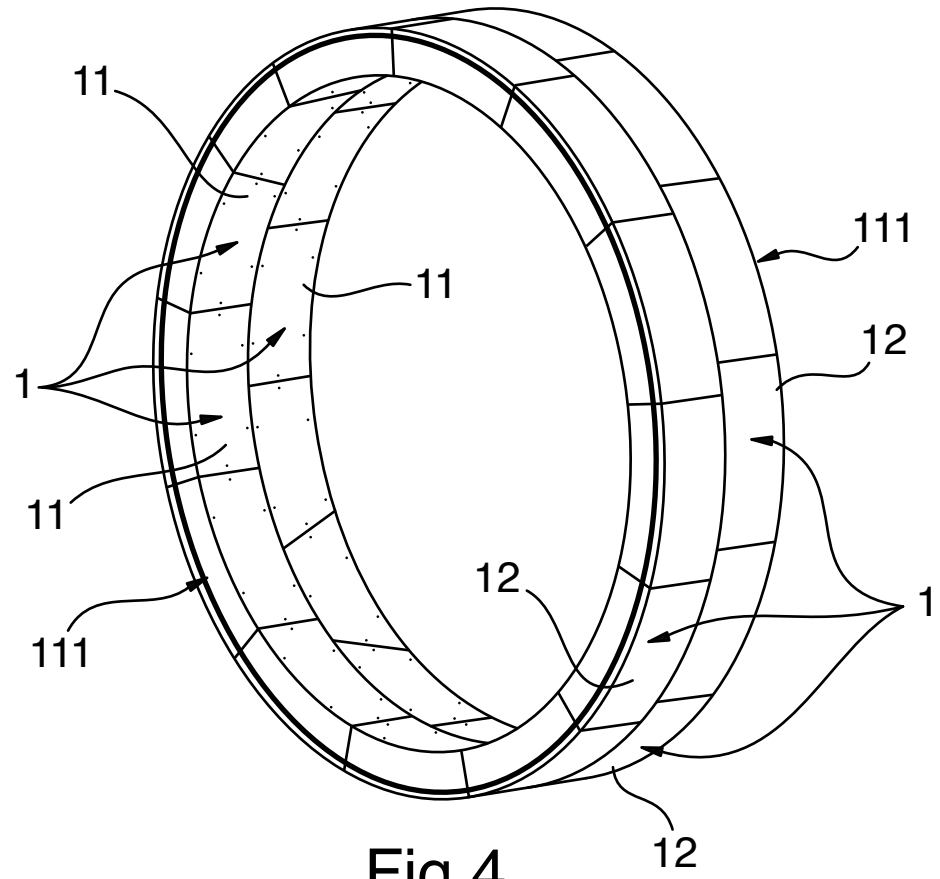
11
111
11
12
1
11
12
1
111
12

Fig.4

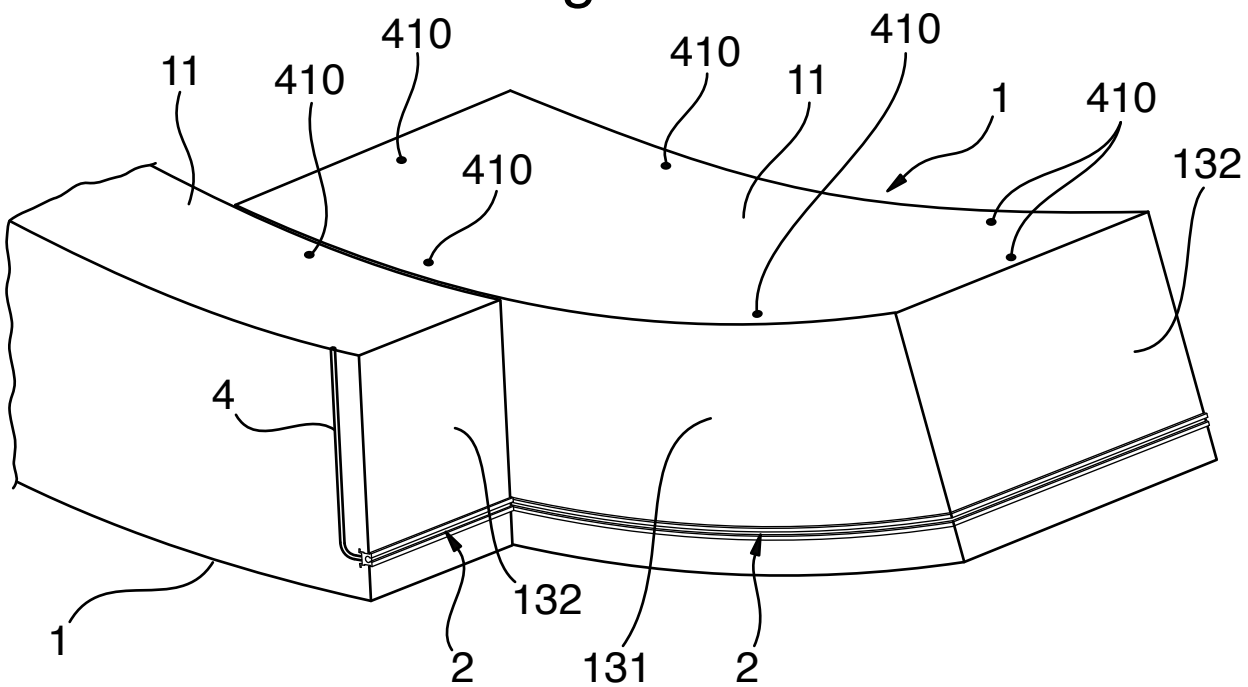
410
410
410
11
410
11
1
410
410
132
4
132
1
2
131
2

Fig. 5

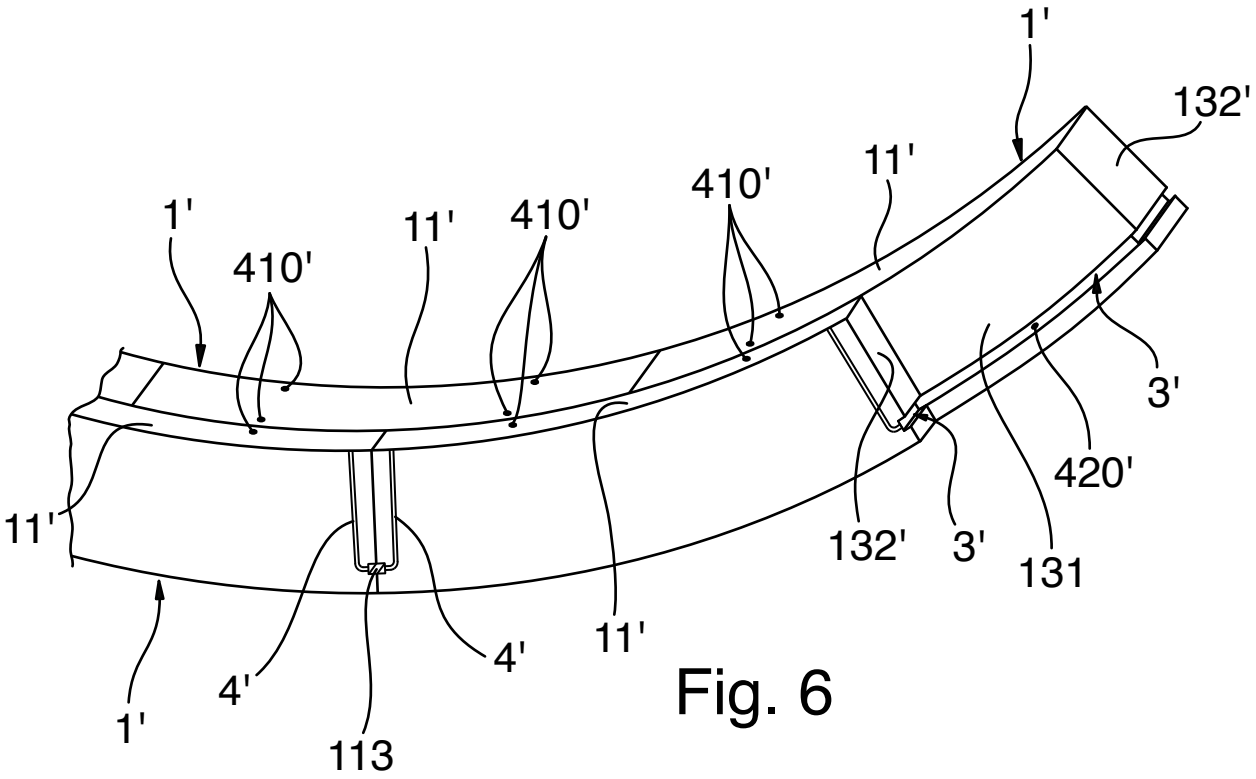
1'
132'
11'
410'
1'
410'
11'
410'
11'
3'
420'
11'
132'
3'
131
4'
11'
4'
1'
113

Fig. 6

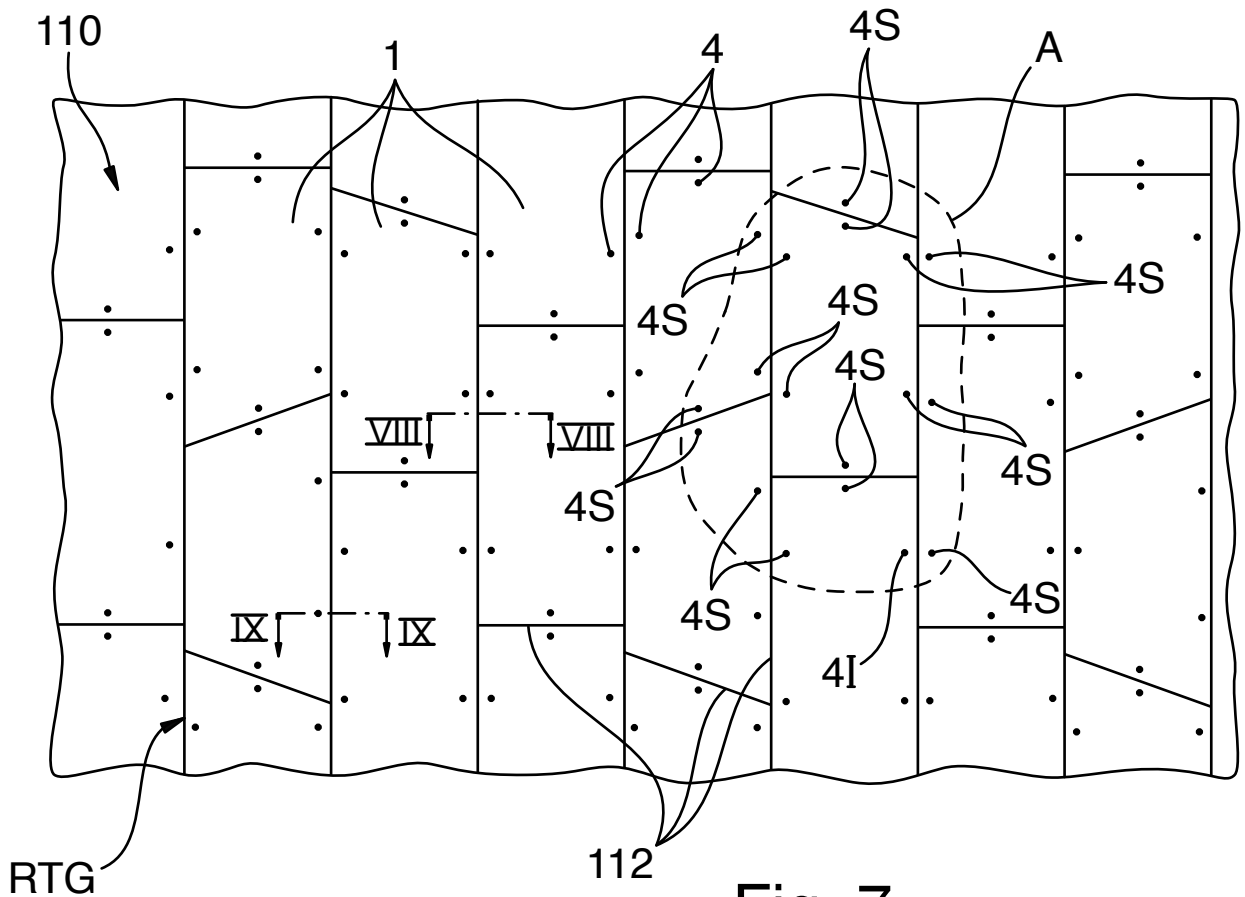
110
1
4
4S
A
4S
4S
4S
4S
4S
VIII
VIII
4S
4S
IX
IX
4S
4I
4S
RTG
112

Fig. 7

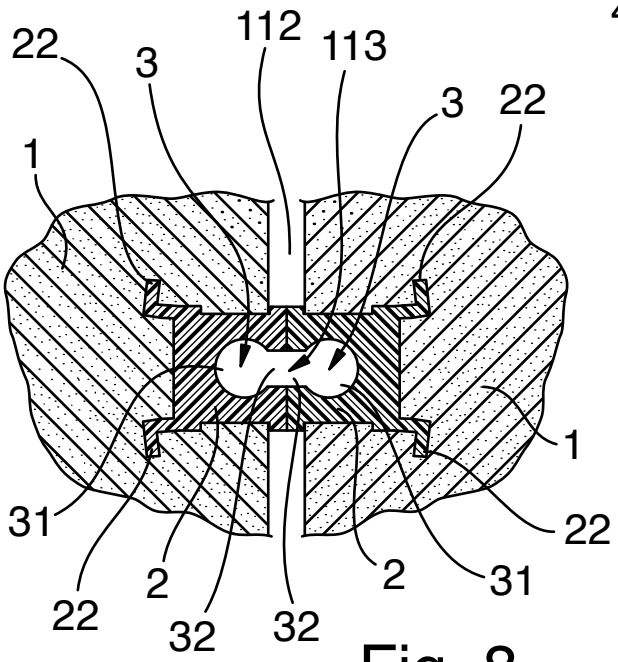

Fig. 8

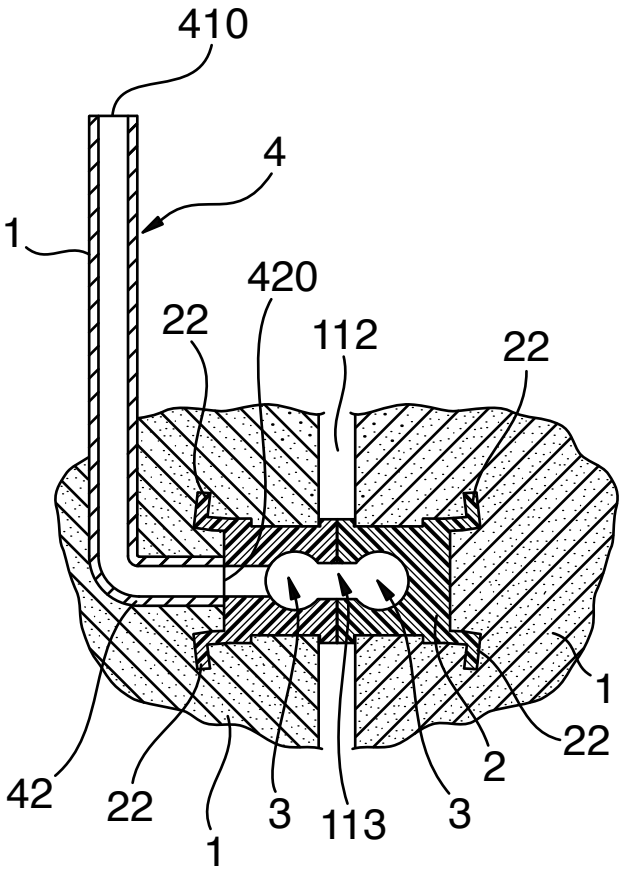

Fig. 9

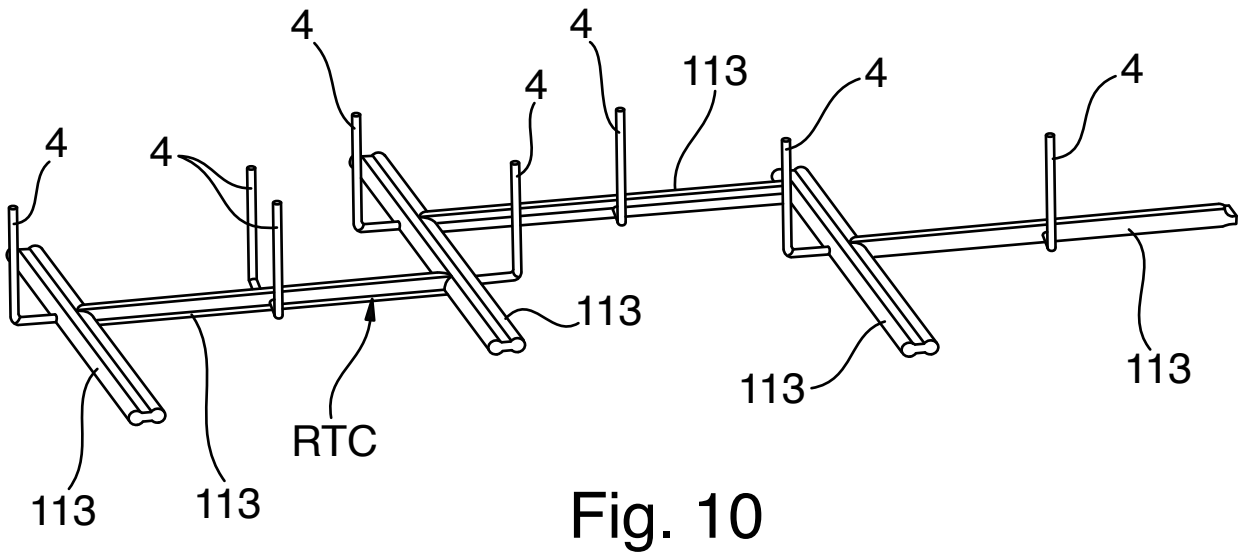

Fig. 10

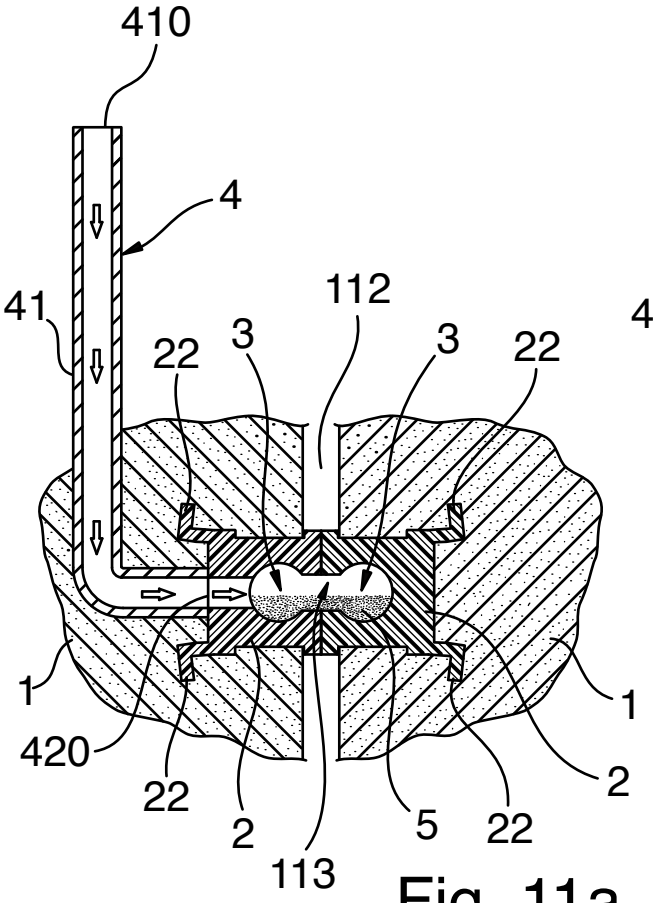

Fig. 11a

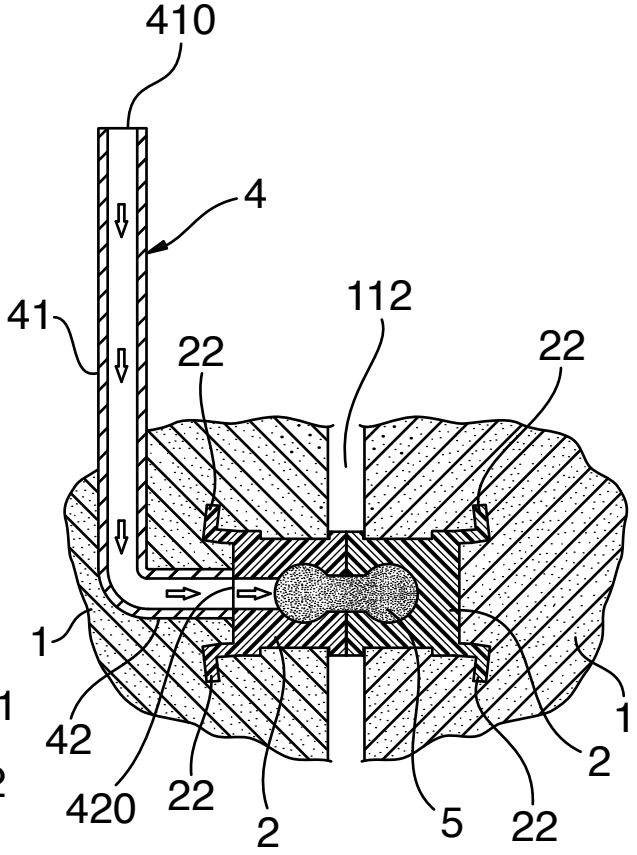

Fig. 11b

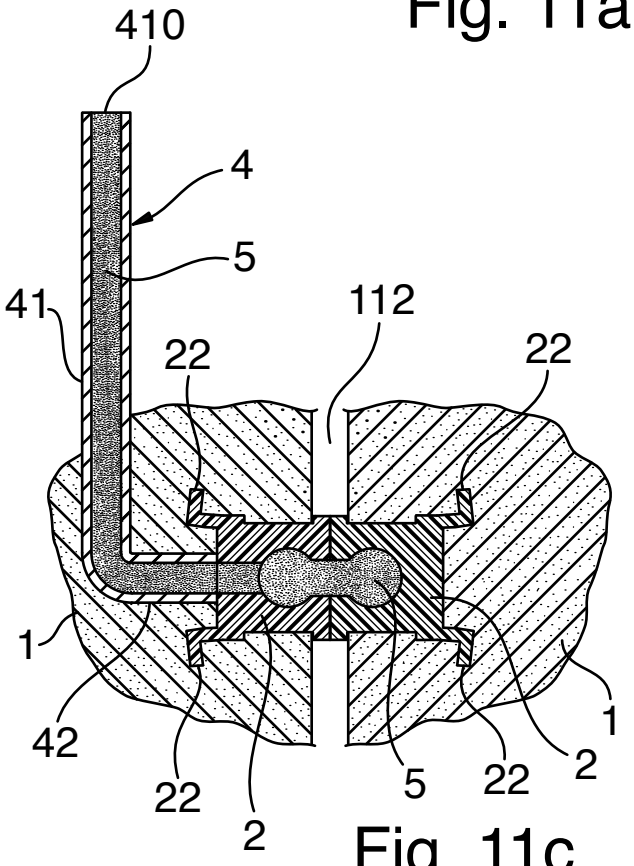

Fig. 11c

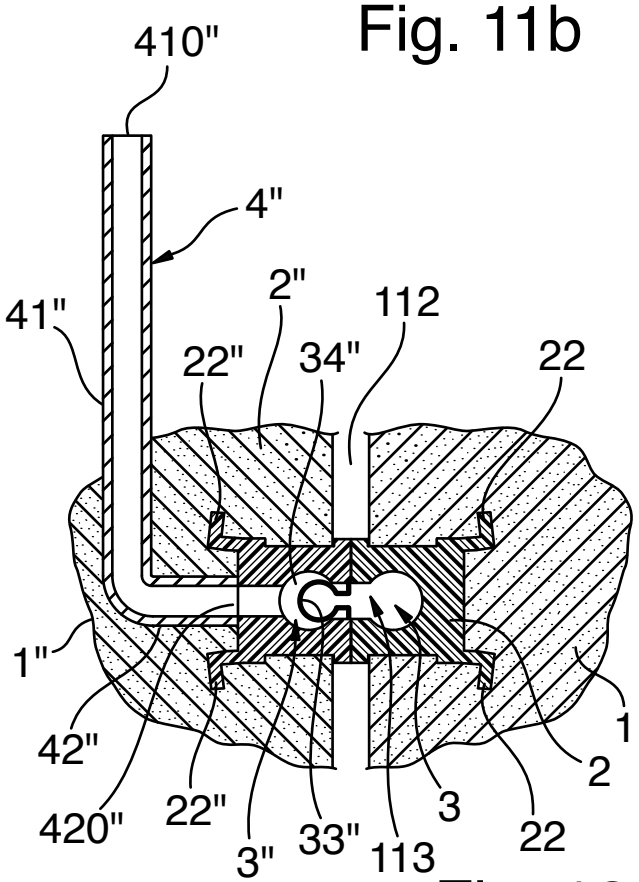

Fig. 12

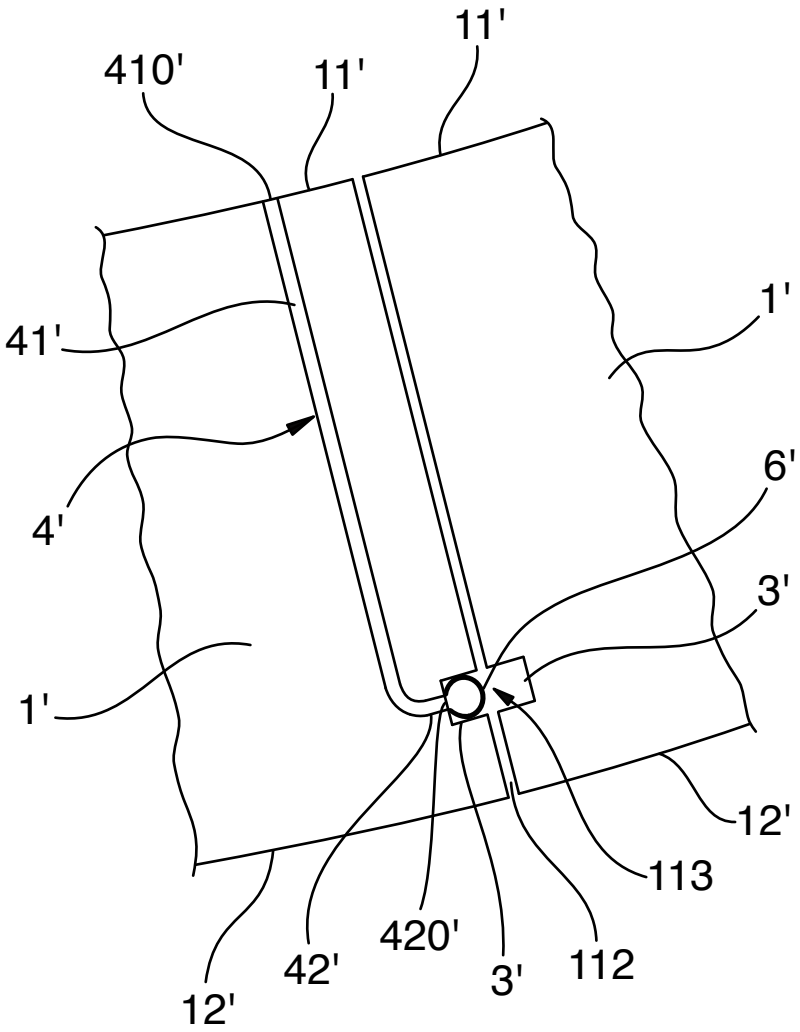

Fig. 13