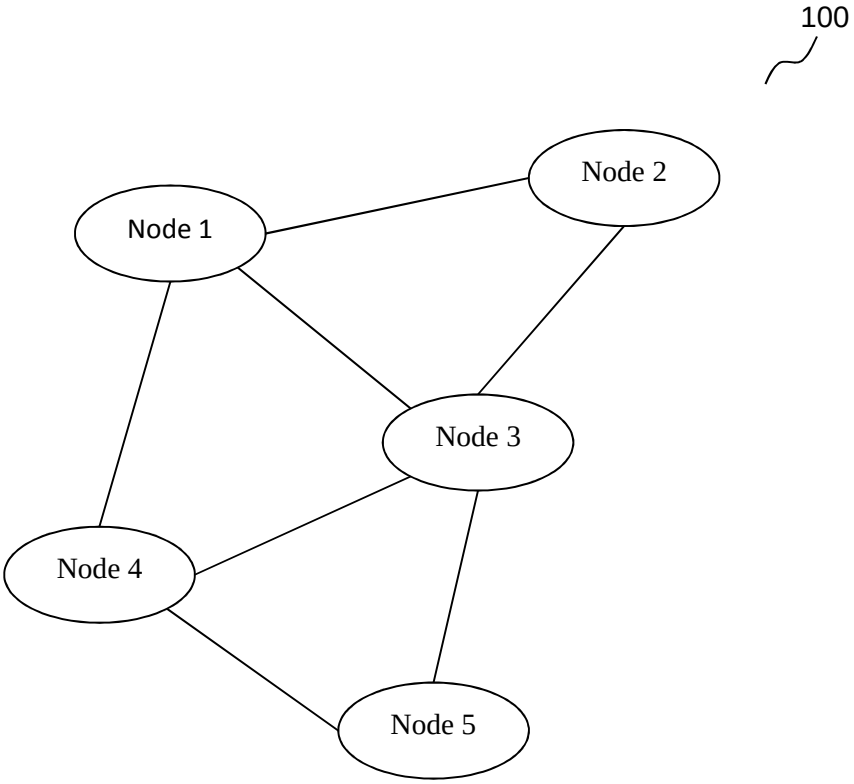

Figure 1

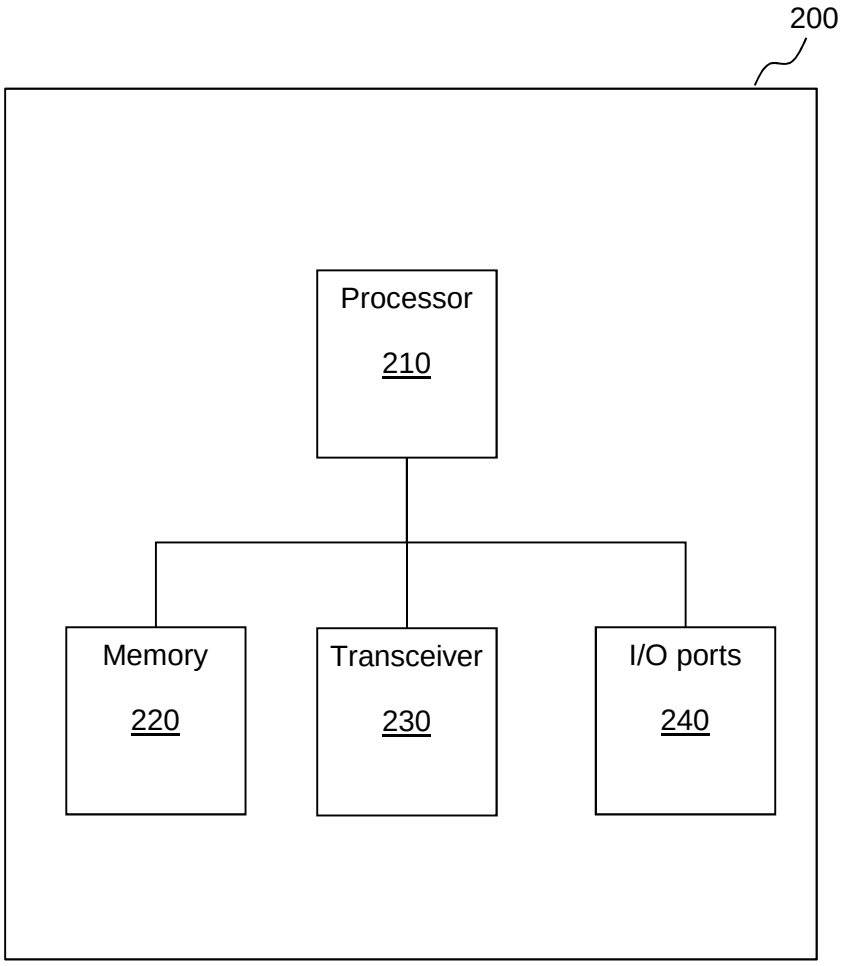

Figure 2

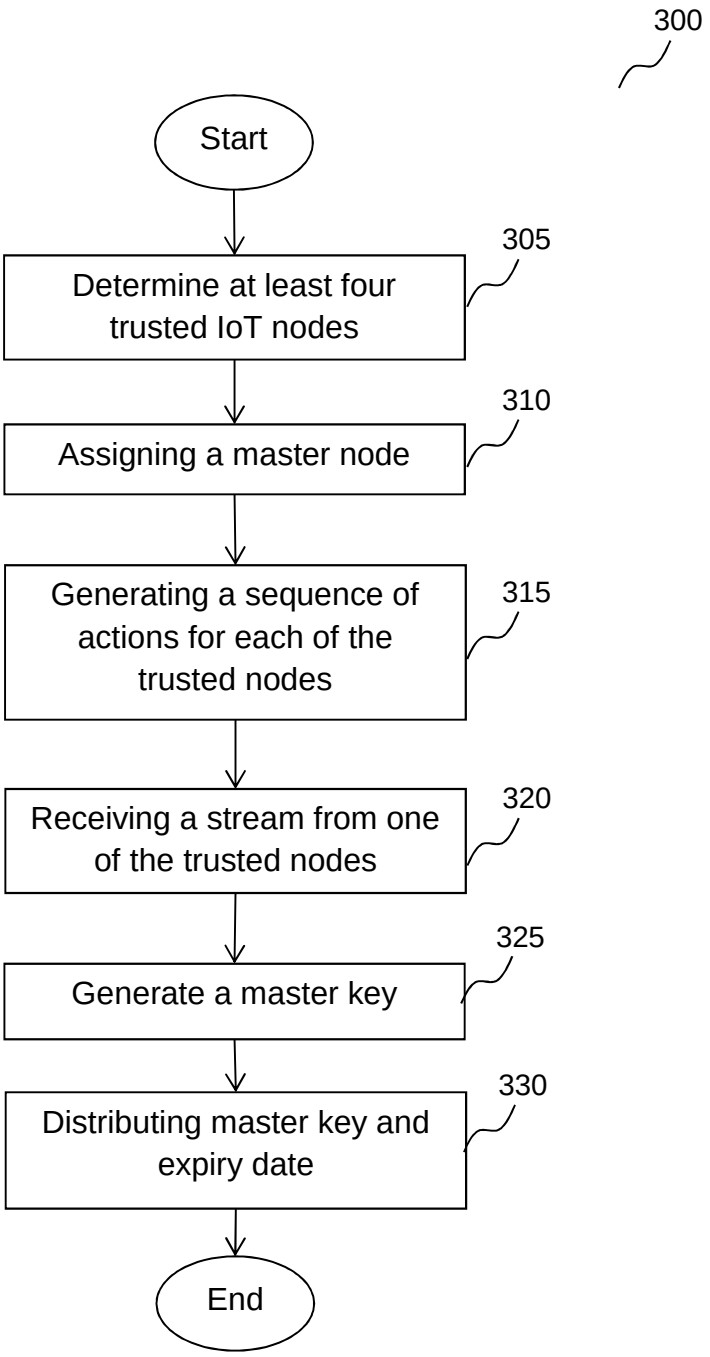
300
Start
305
Determine at least four trusted IoT nodes
310
Assigning a master node
315
Generating a sequence of actions for each of the trusted nodes
320
Receiving a stream from one of the trusted nodes
325
Generate a master key
330
Distributing master key and expiry date
End

Figure 3

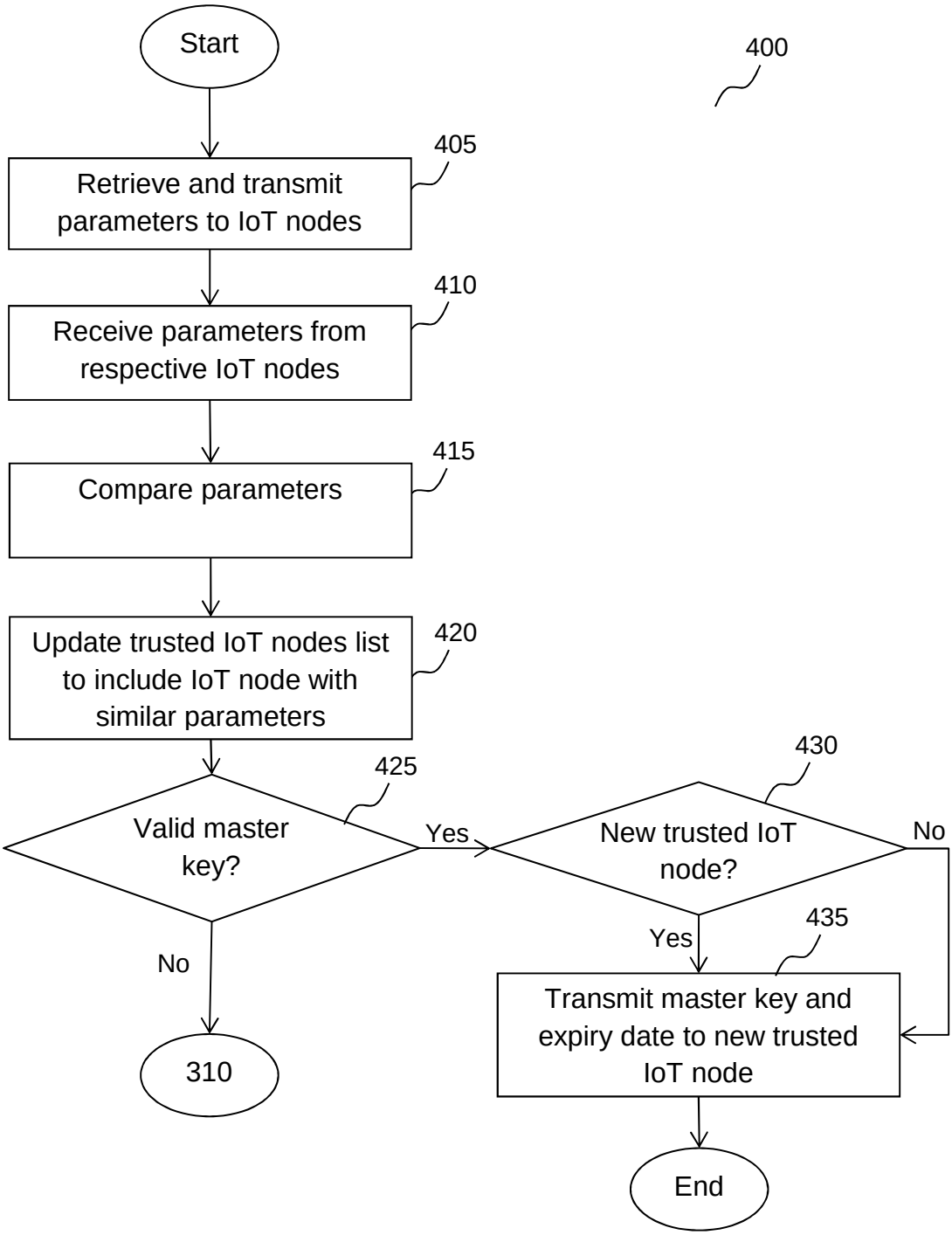
Start
400
405
Retrieve and transmit parameters to IoT nodes
410
Receive parameters from respective IoT nodes
415
Compare parameters
420
Update trusted IoT nodes list to include IoT node with similar parameters
425
Valid master key?
Yes
No
310
430
New trusted IoT node?
No
Yes
435
Transmit master key and expiry date to new trusted IoT node
End

Figure 4

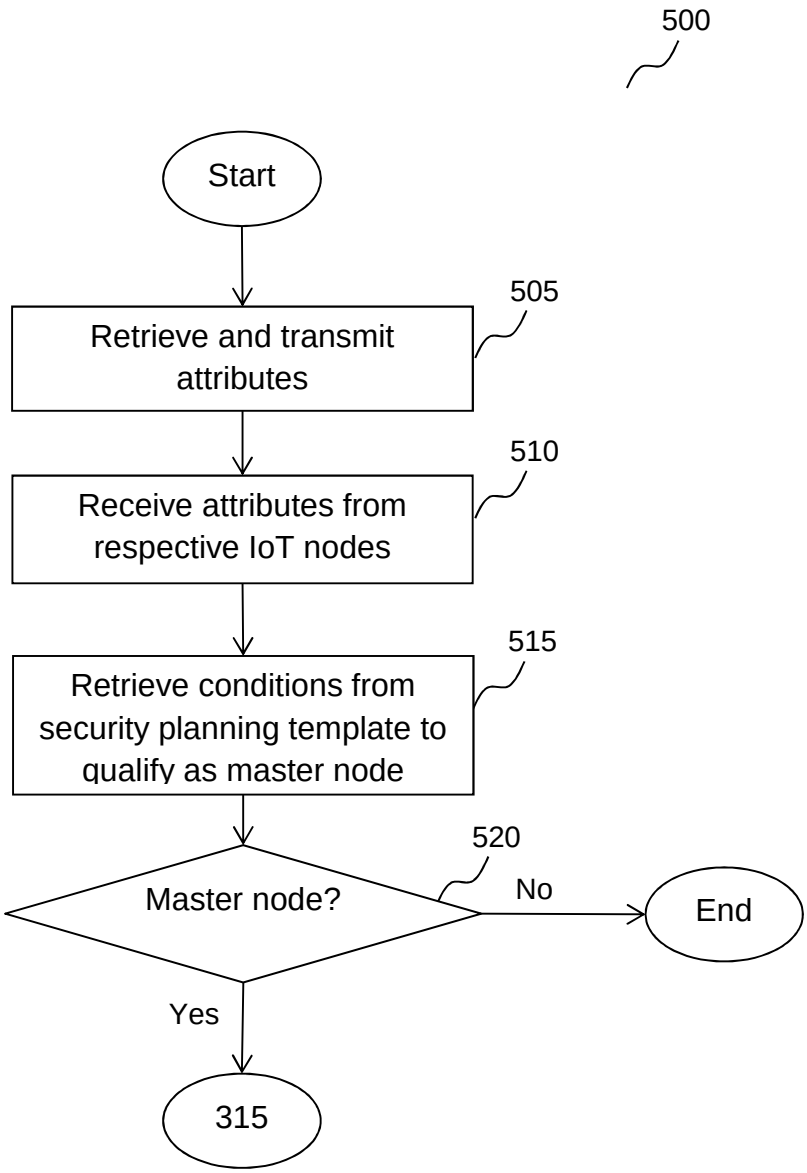
500
Start
505
Retrieve and transmit attributes
510
Receive attributes from respective IoT nodes
515
Retrieve conditions from security planning template to qualify as master node
520
Master node?
No
End
Yes
315

Figure 5

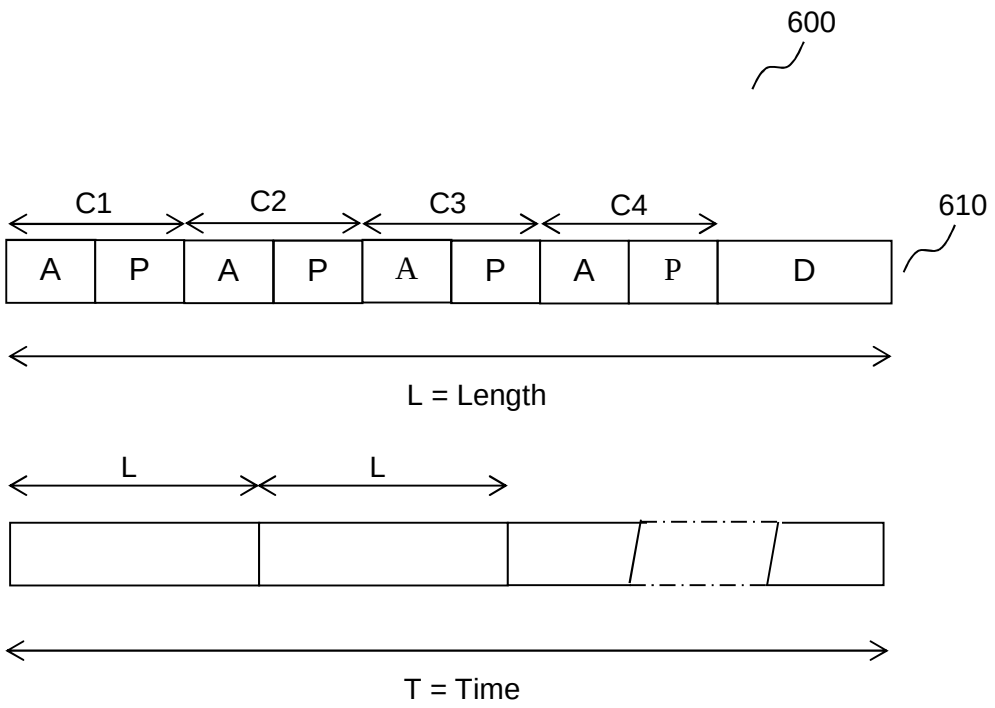

Figure 6

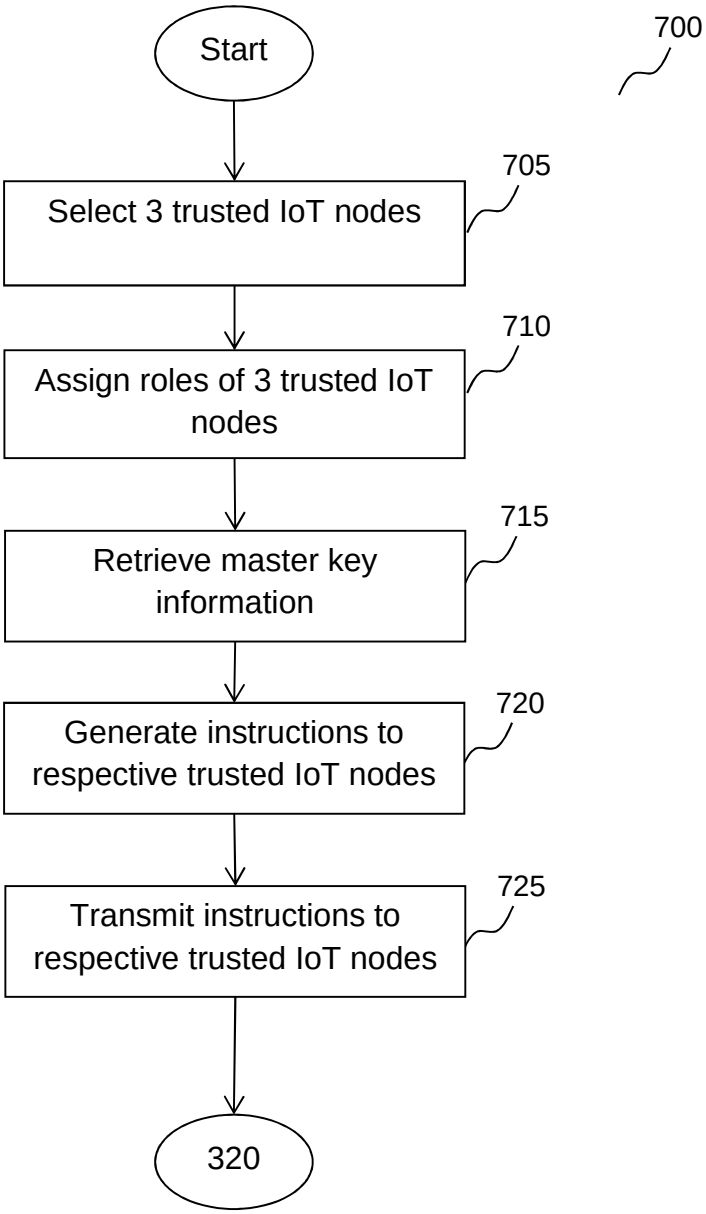
700
Start
705
Select 3 trusted IoT nodes
710
Assign roles of 3 trusted IoT nodes
715
Retrieve master key information
720
Generate instructions to respective trusted IoT nodes
725
Transmit instructions to respective trusted IoT nodes
320

Figure 7

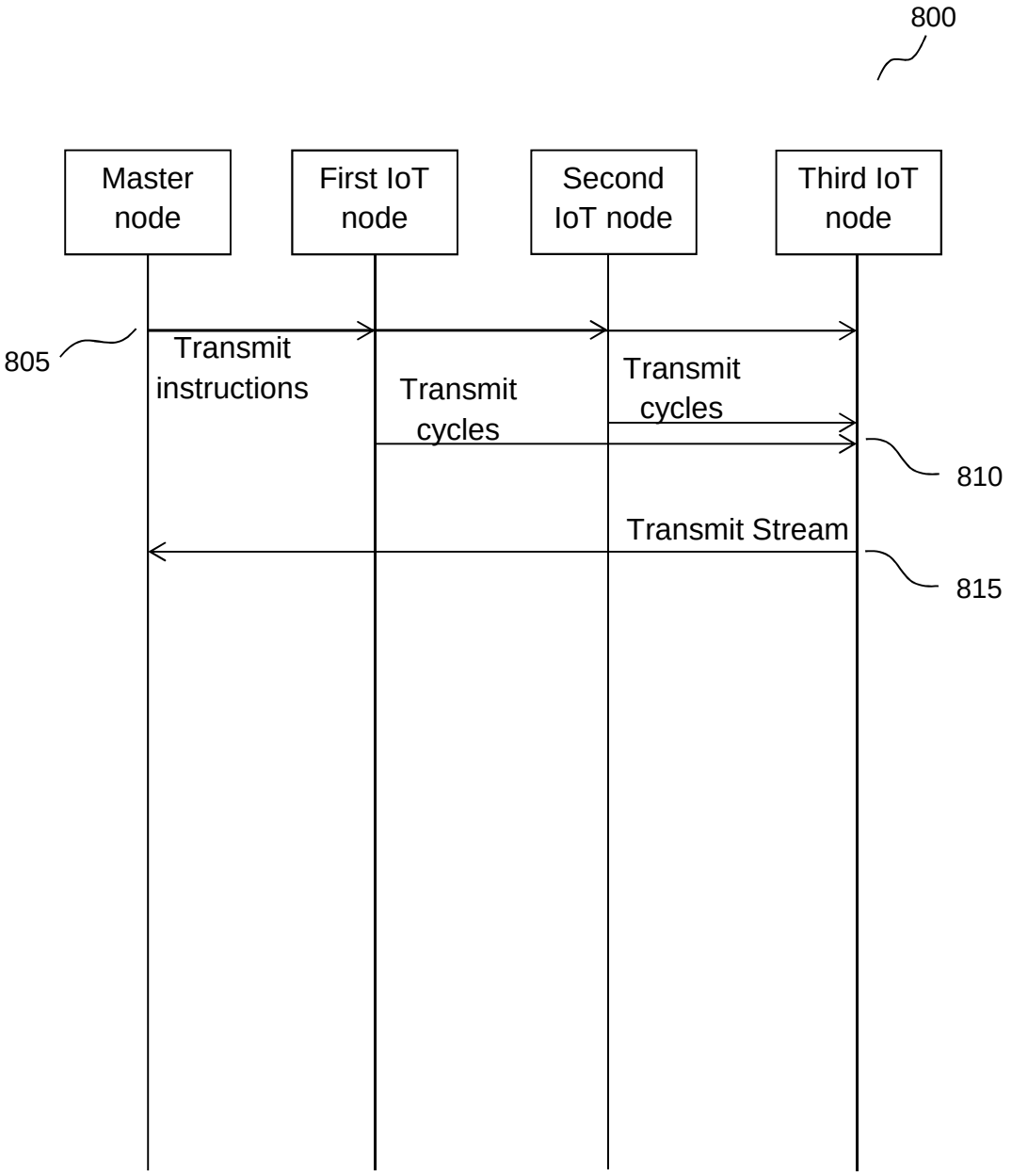
800
Master node
First IoT node
Second IoT node
Third IoT node
805
Transmit instructions
Transmit cycles
Transmit cycles
810
Transmit Stream
815

Figure 8

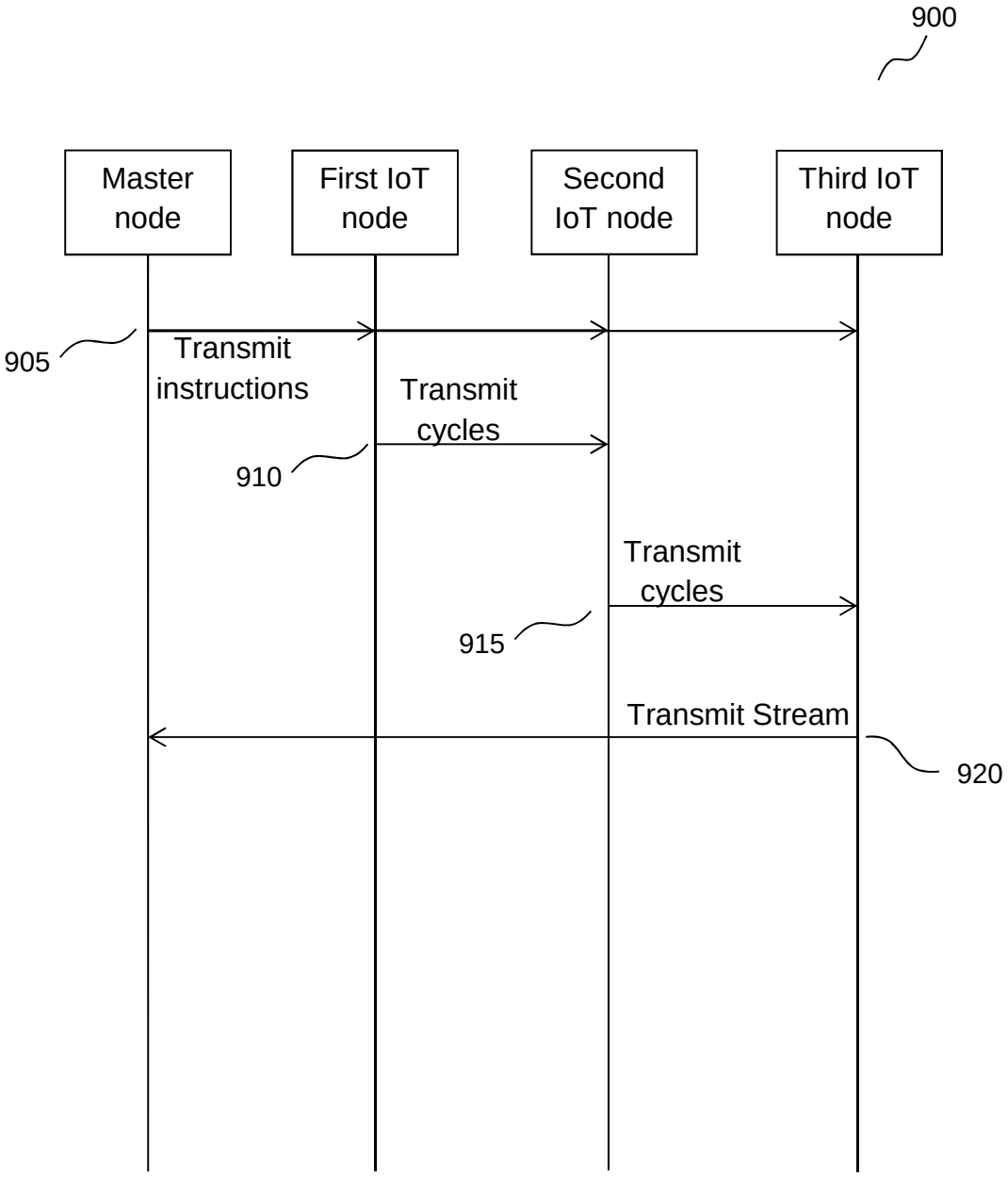
900
Master node
First IoT node
Second IoT node
Third IoT node
905
Transmit instructions
Transmit cycles
910
Transmit cycles
915
Transmit Stream
920

Figure 9

1000

<table>
<tr><td colspan="2">Master Key

Master Key:
Valid period:
Time stamp:</td></tr>
<tr><td>Parameter for trusted IoT nodes

1. Application layer
2. Transport layer</td><td rowspan="3">Trusted IoT nodes list

1. 1.1.1.1
2. 1.1.1.2
3. 1.1.1.3
4. 1.1.1.4
5. 1.1.1.5
6. 1.1.1.6</td></tr>
<tr><td>Attribute for master node

1. Processor power
2. Battery power</td></tr>
<tr><td>Master Key information

K = (4, A|P, 1) + 60

Sequence:
1. G: C2; A|P / T: 3
2. G: C1, C3, C4; A|P / T: 3
3. R: C1-C4 / G: C1-C4; M</td></tr>
</table>

Figure 10